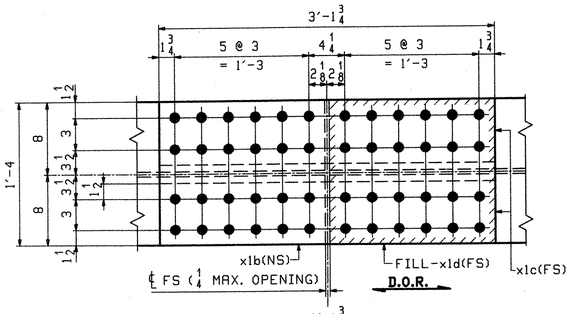

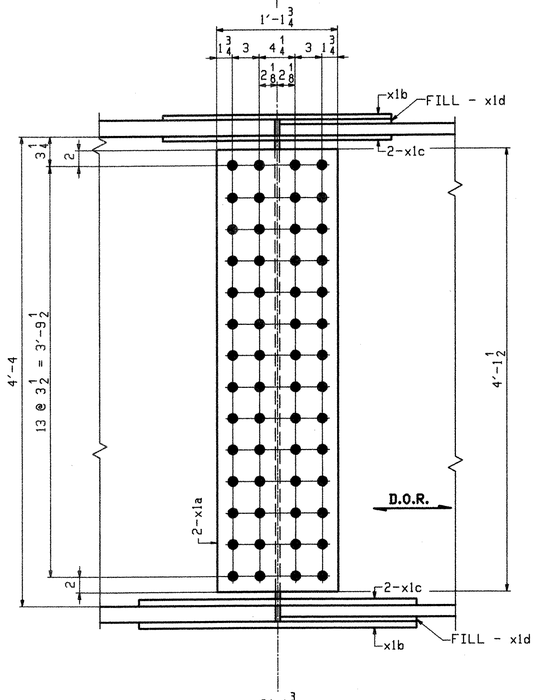

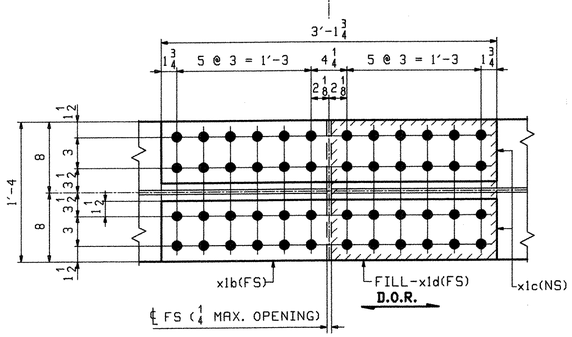

FIELD SPLICE DETAIL ~ X1M1

FIELD SPLICE 1 - AS SHOWN

FIELD SPLICE DETAIL ~ X1M2

FIELD SPLICE 2 - ROTATE 180°

ABM INFO		SHIP	BILL OF MATERIAL					JOB NO.	DRAWING NO.	REV.
									X1	
PAGE	LINE	MARK	QTY	MARK	MATERIAL	LENGTH FT	LENGTH INCHES	REMARKS	WT	PROCUREMENT NOTES
		XIM1	6		FIELD SPLICE				516	
		XIM2	6		FIELD SPLICE				516	
2	B		24	x1a	PL 1/2x49 1/2	1	1 3/4	(M270-50WT1) (H1-2)		
2	C		24	x1b	PL 1/2x16	3	1 3/4	(M270-50WT1) (H1-2)		
2	D		48	x1c	PL 1/2x6	3	1 3/4	(M270-50WT1) (H1-2)		
2	E		24	x1d	PL 10GA x 16	1	6 7/8	(A606-4) FILL		

NOTES:
1. FOR GENERAL NOTES SEE DRAWING GN1.
2. HOLES IN SPLICE PLATES ARE PRE-DRILLED. ENDS OF GIRDERS ARE DRILLED FROM SOLID USING SPLICE PLATES AS A TEMPLATE.
3. D.O.R. DENOTES DIRECTION OF MILL ROLLING
4. H2-3 DENOTES CHARPY V-NOTCH TESTING REQUIRED.

OUT FOR APPROVAL	FINAL 7-17-06								
OUT FOR APPROVAL									
ISSUED TO SHOP									
FIELD & OFFICE									
REV.	REMARKS	DATE	DWN	CHK	APP	Q.A.	NO.	DIA.	LGT	TYPE	WASHER

MATERIAL: M270-50W (UN)
ELECTRODES:
HOLES: 15/16Ø DA
SHOP BOLTS: NONE
SURFACE PREP. & PAINT: AS NOTED ON GN1

RECEIVED
CK'D BY ____ CK'D BY MAM
JUL 26 2006
RESUBMIT ____ APPROVED ✓
BY ____ DATE 7/28/06

DESCRIPTION: FIELD SPLICE DETAILS
JOB: RTE 9 OVER ROARING BRANCH OF WALLOOMSAC RIVER
BRIDGE No. BR 11
WOODFORD, VT. BENNINGTON COUNTY

TENSOR 2608

DRAWN BY	DATE
JTB	02/21
CHKD BY	
PCP	03/06
APPROV BY	
SUPERVISOR	W. J. GATTI
Q.A.	

PROJ NO. BHF 010-1(29)
CUSTOMER: RENAUD BROTHERS, INC.

CASCO BAY STEEL STRUCTURES, INC.
75 SPRING HILL ROAD SACO, MAINE 04072
PHONE (207) 282-7360 FAX. (207) 282-1179

JOB NO.	DRG. NO.
290	X1
	REV. △

PCP Tue Mar 14 11:23:14 EST 2006 /users/jobs/2608/X1.Rev0

124 SS