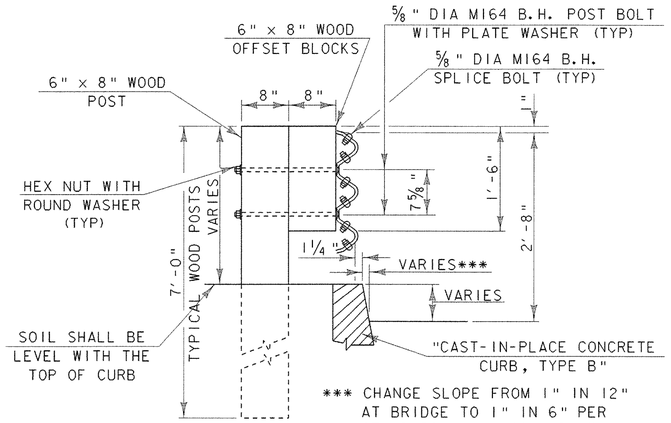

*** CHANGE SLOPE FROM 1" IN 12" AT BRIDGE TO 1" IN 6" PER STANDARD C-1 OVER A DISTANCE OF 10'-0"

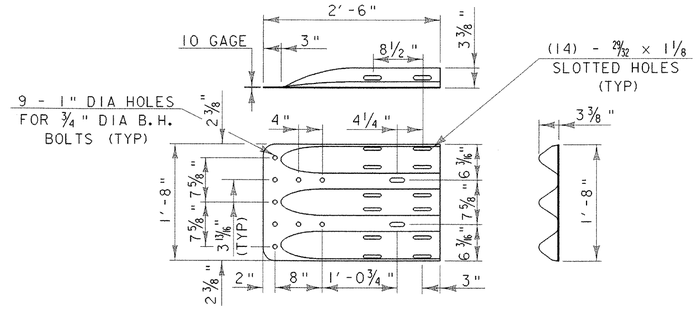

THRIE-BEAM TERMINAL CONNECTOR

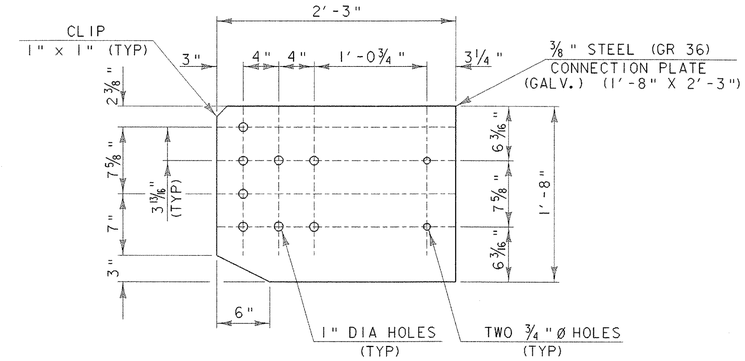

CONNECTION PLATE

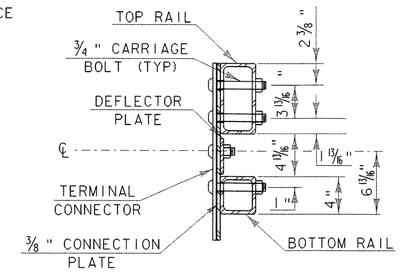

SECTION C-C (CONNECTION PLATE)

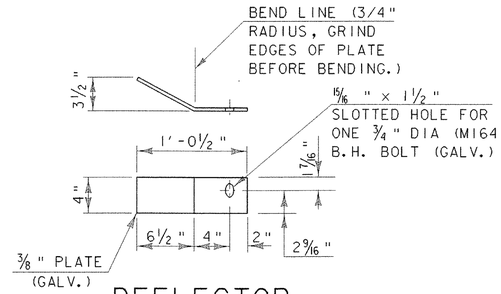

DEFLECTOR PLATE DETAIL

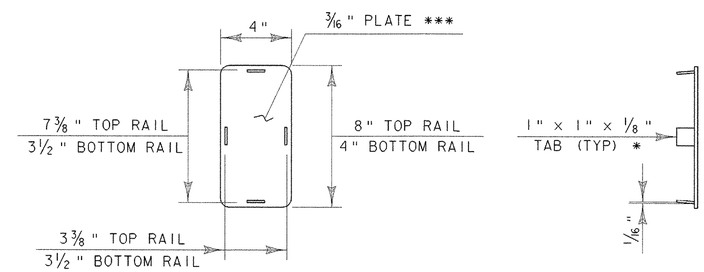

END CAP DETAIL

* WELD TABS TO END CAP PLATE IN TAPERED POSITION SO CAP CAN BE JAMMED INTO END OF RAIL TUBE.
** ROUND CORNERS 1/2" RADIUS (TYP)

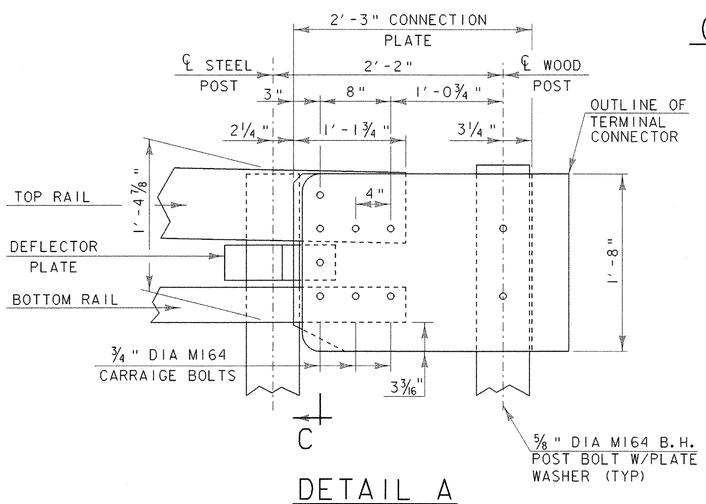

DETAIL A

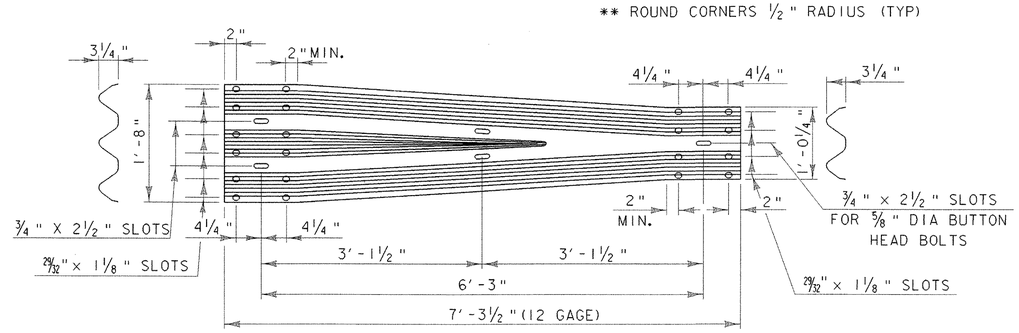

THRIE-BEAM TO STD SB TRANSITION SECTION

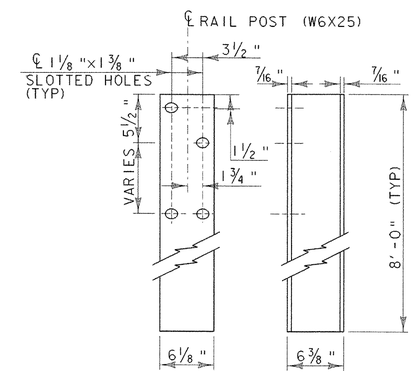

RAIL POST

BRIDGE RAILING – NETC 2 RAIL – THRIE BEAM APPROACH RAIL

PROJECT NAME: WOODFORD	
PROJECT NUMBER: BHF 010-1(29)	
FILE NAME: /84e039/se039rail.dgn	PLOT DATE: 03-OCT-2005
PROJECT LEADER: A. PORTALUPI	DRAWN BY: R.VANHAMBURG
DESIGNED BY: M.EVANS-MONGEON	CHECKED BY: MEM
de039nr3.1	SHEET 81 OF 106