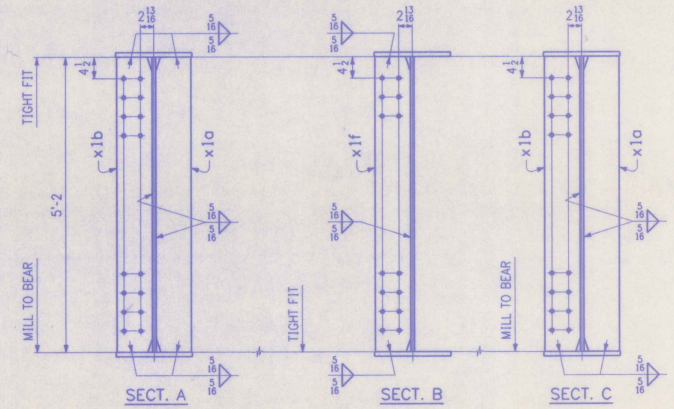

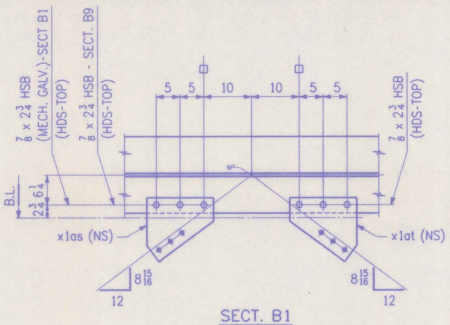

SECT. B1
(DEVELOPED)
SECT. B9
(DEVELOPED)

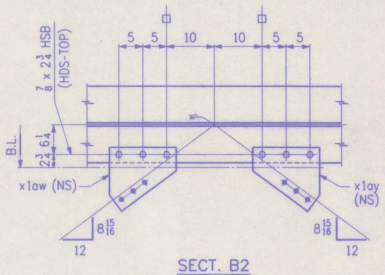

SECT. B2
(DEVELOPED)

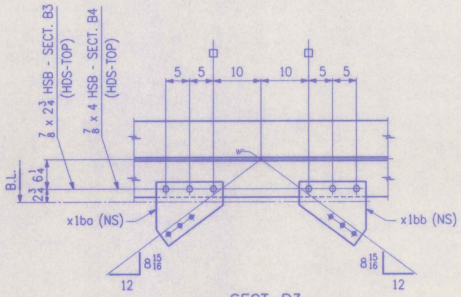

SECT. B3
SECT. B4
(DEVELOPED)

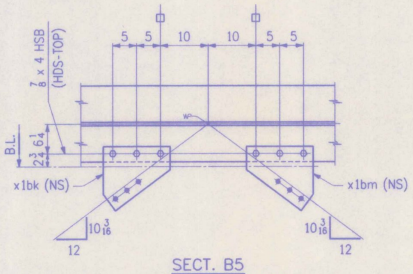

SECT. B5
(DEVELOPED)

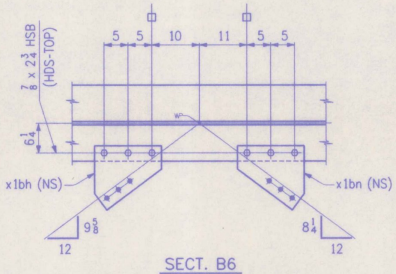

SECT. B6

FED.ROAD DIV.NO.

BILL OF MATERIAL

NO.	MARK	DESCRIPTION	LENGTH		REMA
ONE	G1A	GIRDER			
1	a	PL 62 x 5/8	88	9	(T)
1	b	PL 62 x 5/8	62	0 1/16	(T)
1	c	PL 16 x 15/16	34	9	(T)
1	d	PL 16 x 15/16	62	0	(T)
1	f	PL 16 x 1 1/4	11	0	(T)
1	g	PL 16 x 2 5/16	26	9	(T)
1	h	PL 16 x 1 1/8	16	1 7/16	(T)
1	k	PL 16 x 15/16	34	9	(T)
1	m	PL 16 x 15/16	61	11 1/4	(T)
1	n	PL 16 x 1 1/4	11	0	(T)
1	p	PL 16 x 2 5/16	26	9	(T)
1	s	PL 16 x 1 1/8	16	3 5/16	(T)
2	x1a	BAR 7 1/2 x 7/8	5	2	
2	x1b	BAR 7 1/2 x 7/8	5	2	
6	x1f	BAR 7 1/2 x 1/2	5	2	
2	x1as	PL 14 x 3/8	1	1 1/2	BENT
2	x1at	PL 14 x 3/8	1	1 1/2	BENT
2	x1aw	PL 14 x 3/8	1	1 1/2	BENT
2	x1ay	PL 14 x 3/8	1	1 1/2	BENT
2	x1bo	PL 14 x 3/8	1	1 1/2	BENT
2	x1bb	PL 14 x 3/8	1	1 1/2	BENT
1	x1bk	PL 14 x 3/8	1	2 11/16	BENT
1	x1bm	PL 14 x 3/8	1	2 11/16	BENT
1	x1bh	PL 14 x 3/8	1	2 1/4	
1	x1bn	PL 14 x 3/8	1	1 5/16	
1	x1g[R]	BAR 2 15/16 x 1/4	0	10 7/8	
1	x1h[R]	BAR 4 5/16 x 1/4	0	10 7/8	
33		7/8 ø H.S. BOLTS	0	2 3/4	
12		7/8 ø H.S. BOLTS	0	4	
45		WASHERS FOR 7/8 ø H.S. BOLTS			
3		7/8 ø H.S. BOLTS	0	2 3/4	MECH. G
3		WASHERS FOR 7/8 ø H.S. BOLTS			MEC

SHOP DRAWING REVIEW
REVIEW IS FOR GENERAL COMPLIANCE WITH CONTRACT DOCUMENTS. NO RESPONSIBILITY IS ASSUMED FOR CORRECTNESS OF DIMENSIONS OR DETAILS.
X — NO EXCEPTIONS NOTED
AS NOTED
REVISE AND RESUBMIT
RECEIVED, SEE REMARKS
Barnes and Jarnis, Inc.
60 Seyboun Street
Boston, Massachusetts 02116
DATE 9-13-95 BY: JB

SHOP NOTE
HOLES: 13/16 ø (UN)
BOLTS: AS NOTED
PAINT: AS NOTED, SEE DWG. N1
FOR GENERAL SHOP NOTES, SEE DWG. N1.
FOR WEB CAMBER DIAGRAM, SEE DWG. WC1.

WORK THIS DWG. WITH DWG. 5

CODE: 30

NO.	REVISION
△	
△	
△	

HIGH STEEL STRUCTURES, INC.

GIRDER
U.S. ROUTE 7 OVER OTTER C
BRIDGE NO. 79
TOWN OF WALLINGFORD, COUNTY
STATE OF VERMONT
AGENCY OF TRANSPORTAT

STATE CONTRACT OR REF. NO. PROJECT NO. BRS-0137(13
CONTRACTOR J. A. McDONALD, INC.
IN CHARGE: abs MADE BY: PPF 1-31 CHK'D BY:
CONTRACT NUMBER VT-95367 DRAWING NUMBER

400-9