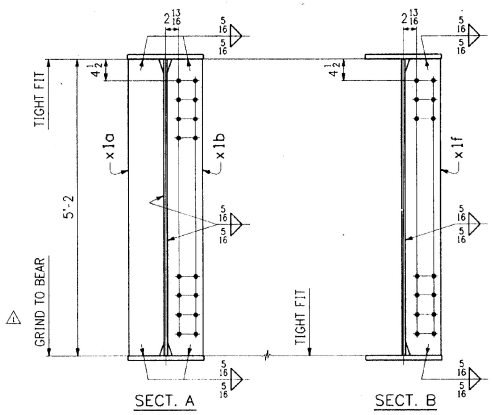

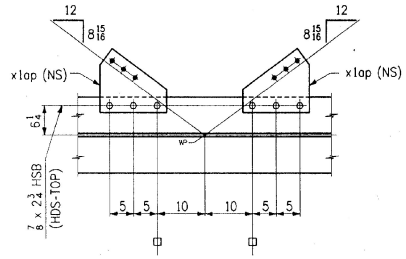

SECT. B1

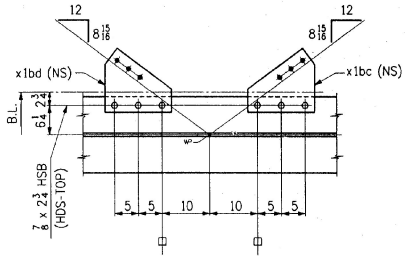

SECT. B2
(DEVELOPED)

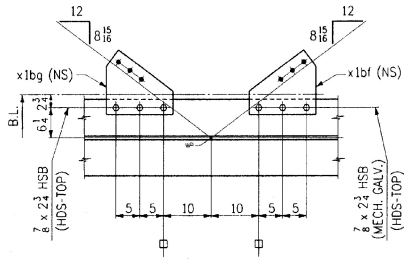

SECT. B3
(DEVELOPED)

FED. ROAD DIV. NO.	STATE	FED. AID PROJ. NO.
	VT	

BILL OF MATERIAL

NO.	MARK	DESCRIPTION	LENGTH		REMARKS	ITEM	SHIP WEIGHT LB.
ONE	G6B	GIRDER					28885
1	a	PL 62 x 5/8	65	6 7/8	(T)	2/4	
1	b	PL 62 x 3/8	42	11 1/2	(T)	2/5	
1	c	PL 16 x 1 1/8	73	0 3/8	(T)	2/13	
1	d	PL 16 x 1 1/8	35	6	(T)	2/14	
1	f	PL 16 x 1 1/8	72	9 3/16	(T)	2/13	
1	g	PL 16 x 1 1/8	35	6	(T)	2/14	
2	x1k	PL 58 x 9/16	1	1	(T)	3/6	
2	x1m	PL 16 x 3/8	2	1	(T)	3/4	
4	x1n	BAR 7 x 3/4	2	1	(T)	3/2	
1	x1o	BAR 7 1/2 x 7/8	5	2		3/12	
1	x1b	BAR 7 1/2 x 7/8	5	2		3/12	
5	x1f	BAR 7 1/2 x 1/2	5	2		3/14	
2	x1ap	PL 14 x 3/8	1	1 1/2		3/16	
3	x1bd	PL 14 x 3/8	1	1 1/2		3/16	
3	x1bc	PL 14 x 3/8	1	1 1/2		3/16	
1	x1bg	PL 14 x 3/8	1	1 1/2		3/16	
1	x1bf	PL 14 x 3/8	1	1 1/2		3/16	
27		7/8 ø H.S. BOLTS	0	2 3/4		B1/2	
27		WASHERS FOR 7/8 ø H.S. BOLTS				B1/5	
3		7/8 ø H.S. BOLTS	0	2 3/4	A325-1 W/1 A563 GR. DH HEX NUT GALV.	B1/8	
3		WASHERS FOR 7/8 ø H.S. BOLTS			F436 GALV.	B1/9	

SHOP DRAWING REVIEW
REVIEWED FOR GENERAL COMPLIANCE WITH CONTRACT DOCUMENTS. NO RESPONSIBILITY IS ASSUMED FOR CORRECTNESS OF DIMENSIONS OR DETAILS.
APPROVED
APPROVED AS NOTED
APPROVED AND RESUBMIT
RESUBMIT - SEE REMARKS
Barnes and Jarris, Inc.
DATE MAR 22 1996

SHOP NOTE
HOLES: 15/16 ø (UN)
BOLTS: AS NOTED
PAINT: AS NOTED, SEE DWG. N1
FOR GENERAL SHOP NOTES, SEE DWG. N1.
FOR WEB CAMBER DIAGRAM, SEE DWG. WC1.

WORK THIS DWG. WITH DWG. 23

CODE: 30

NO.	REVISION	DATE
1	CHANGED "MILL" TO "GRIND". BOLT SPECS.	2-21-96

HIGH STEEL STRUCTURES, INC.
1770 Hempstead Road
Lancaster, PA 17605-0008
Phone 717/299-5211
A Division of High Industries, Inc.

GIRDER G6B
U.S. ROUTE 7 OVER OTTER CREEK
BRIDGE NO. 79
TOWN OF WALLINGFORD, COUNTY OF RUTLAND
STATE OF VERMONT
AGENCY OF TRANSPORTATION

STATE CONTRACT OR REF. NO. PROJECT NO. BRS-0137(13)
CONTRACTOR J. A. McDONALD, INC.
IN CHARGE: abs MADE BY: PPF 2-3 CHK'D BY: LD DATE: 2-5-96
CONTRACT NUMBER: VT-95367 DRAWING NUMBER: 24 OF 24

400-9

MAR 01 1996