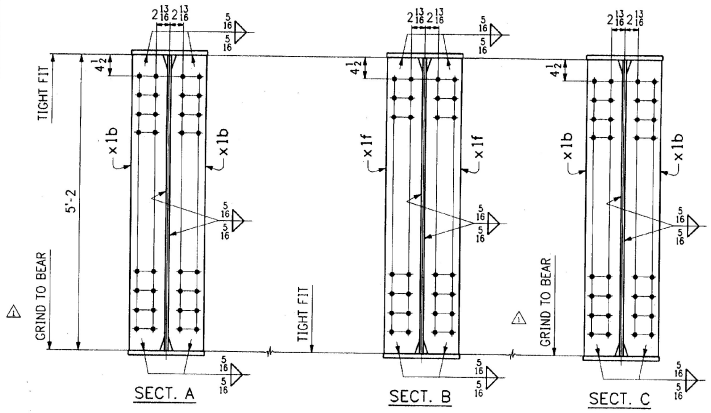

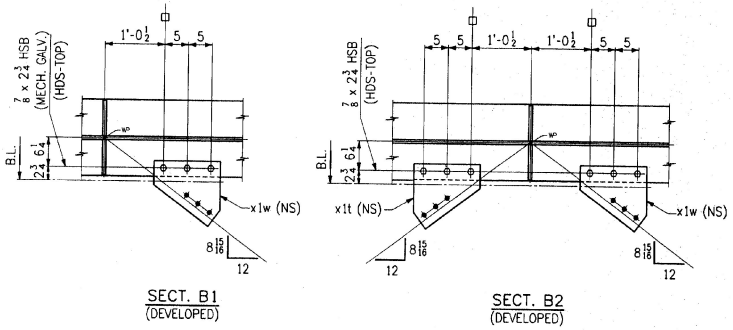

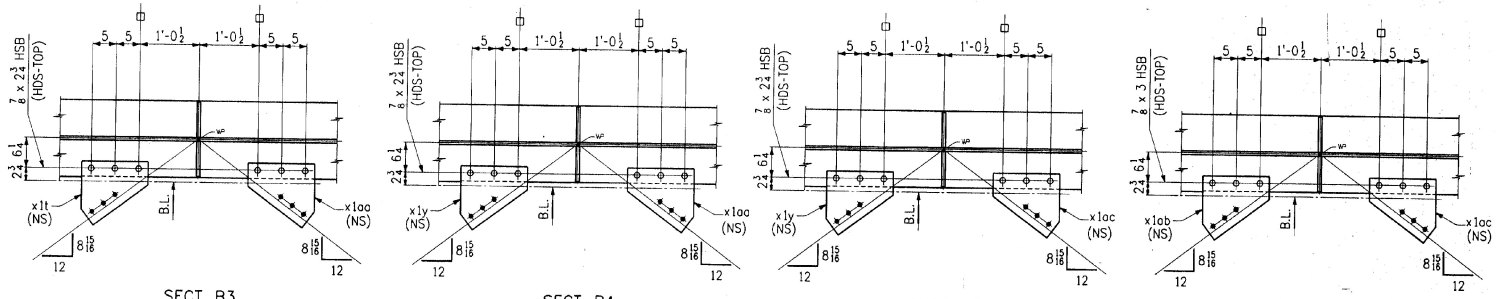

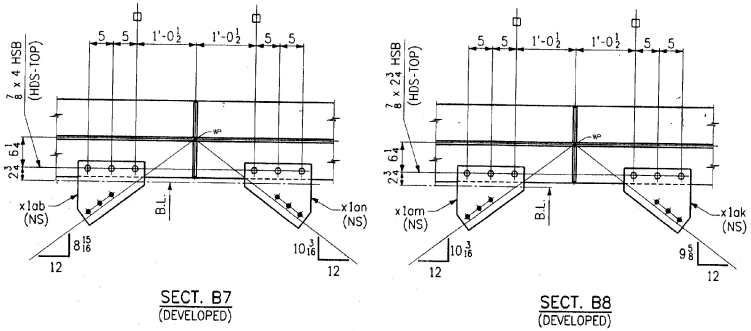

FED. ROAD DIV. NO.	STATE	FED. AID PROJ. NO.
	VT	

BILL OF MATERIAL

NO.	MARK	DESCRIPTION	LENGTH		REMARKS	ITEM	SHIP WEIGHT LB.
ONE	G5A	GIRDER					41175
1	a	PL 62 x 5/8	88	9	(T)	2/3	
1	b	PL 62 x 5/8	62	0 5/8	(T)	2/2	
1	c	PL 16 x 15/16	34	9	(T)	2/18	
1	d	PL 16 x 15/16	62	0 7/16	(T)	2/17	
1	f	PL 16 x 1 1/4	11	0	(T)	2/11	
1	g	PL 16 x 2 9/16	26	9	(T)	2/9	
1	h	PL 16 x 1 1/8	16	0 7/8	(T)	2/15	
1	k	PL 16 x 15/16	34	9	(T)	2/18	
1	m	PL 16 x 15/16	62	0 5/8	(T)	2/17	
1	n	PL 16 x 1 1/4	11	0	(T)	2/11	
1	p	PL 16 x 2 3/16	26	9	(T)	2/9	
1	s	PL 16 x 1 1/8	16	3 5/8	(T)	2/15	
4	x1b	BAR 7 1/2 x 7/8	5	2		3/12	
12	x1f	BAR 7 1/2 x 1/2	5	2		3/14	
2	x1w	PL 14 x 3/8	1	1 1/2	BENT	3/16	
2	x1t	PL 14 x 3/8	1	1 1/2	BENT	3/16	
2	x1y	PL 14 x 3/8	1	1 1/2	BENT	3/16	
2	x1aa	PL 14 x 3/8	1	1 1/2	BENT	3/16	
2	x1ac	PL 14 x 3/8	1	1 1/2	BENT	3/16	
2	x1ab	PL 14 x 3/8	1	1 1/2	BENT	3/16	
1	x1an	PL 14 x 3/8	1	2 15/16	BENT	3/16	
1	x1am	PL 14 x 3/8	1	2 15/16	BENT	3/16	
1	x1ak	PL 14 x 3/8	1	2 1/4		3/16	
30		7/8 ø H.S. BOLTS	0	2 3/4		B1/2	
6		7/8 ø H.S. BOLTS	0	3		B1/3	
6		7/8 ø H.S. BOLTS	0	4		B1/4	
42		WASHERS FOR 7/8 ø H.S. BOLTS				B1/5	
3		7/8 ø H.S. BOLTS	0	2 3/4	A325-1 W/1 A563 GR. DH HEX NUT GALV.	B1/8	
3		WASHERS FOR 7/8 ø H.S. BOLTS			F436 GALV.	B1/9	

SHOP DRAWING REVIEW
REVIEW IS FOR GENERAL COMPLIANCE WITH CONTRACT DOCUMENTS. CONTRACTOR RESPONSIBILITY IS ASSUMED FOR DIMENSIONS, QUANTITIES OF MATERIALS OR DETAILS.
APPROVED
APPROVED AS NOTED
AMEND AND RESUBMIT
REJECTED - SEE REMARKS
Barnes and Jarvis, Inc.
Consulting Engineers
Montpelier, Vermont 05236
DATE MAR 22 1996 BY

SHOP NOTE
HOLES: 15/16 ø (UN)
BOLTS: AS NOTED
PAINT: AS NOTED, SEE DWG. N1
FOR GENERAL SHOP NOTES, SEE DWG. N1.
FOR WEB CAMBER DIAGRAM, SEE DWG. WC1.

WORK THIS DWG. WITH DWG. 11

CODE: 30

NO.	REVISION	DATE
1	CHANGED "MILL" TO "GRIND"; BOLT SPECS.	2-21-96

HIGH STEEL STRUCTURES, INC.
1770 Hempstead Road
Lancaster, PA 17605-0008
Phone 717/299-5211
A Division of High Industries, Inc.

GIRDER G5A
U.S. ROUTE 7 OVER OTTER CREEK
BRIDGE NO. 79
TOWN OF WALLINGFORD, COUNTY OF RUTLAND
STATE OF VERMONT
AGENCY OF TRANSPORTATION

STATE CONTRACT OR REF. NO.: PROJECT NO. BRS-0137(13)
CONTRACTOR: J. A. McDONALD, INC.
IN CHARGE: abs MADE BY: PPF 2-1 CHK'D BY: LD DATE: 2-2-96
CONTRACT NUMBER: VT-95367 DRAWING NUMBER: 12 OF 24

400-9

OBSA-400