FED. ROAD DIV. NO.	STATE	FED. AID PROJ. NO.
	VT	

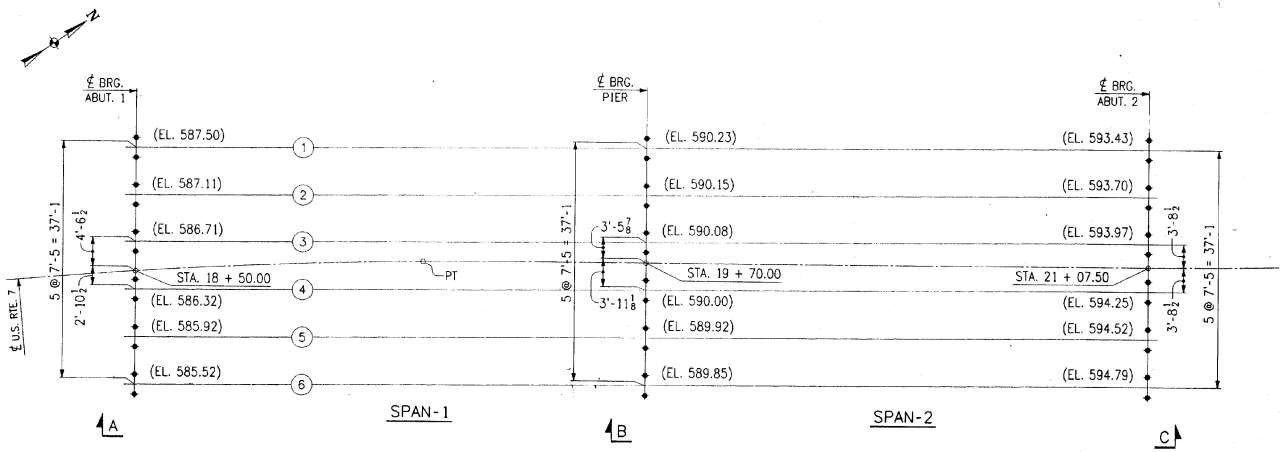

ANCHOR BOLT PLAN

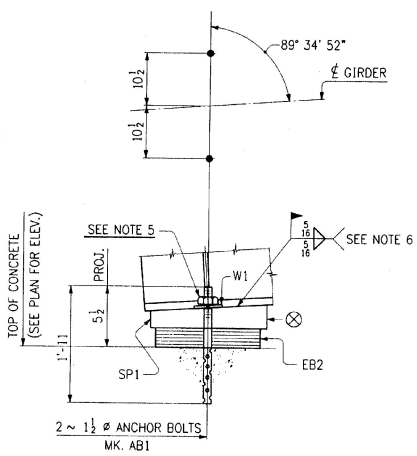

SECT. A
(TYP. @ ABUT. 1)

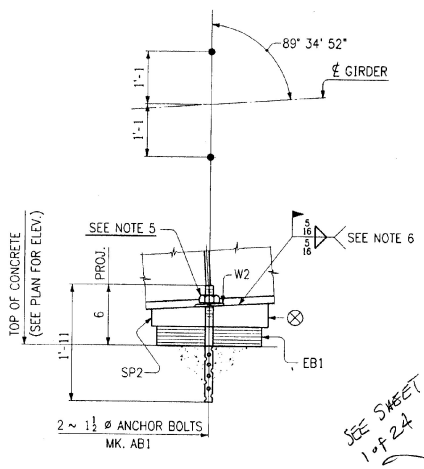

SECT. B
(TYP. @ PIER)

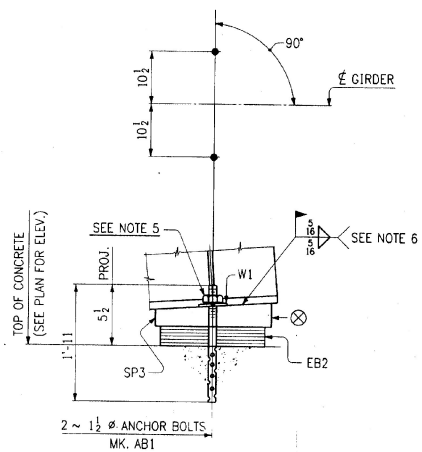

SECT. C
(TYP. @ ABUT. 2)

SEE SHEET 1 of 24 — 9 more pages

SHOP DRAWING REVIEW
REVIEW IS FOR GENERAL COMPLIANCE WITH CONTRACT DOCUMENTS. NO REVIEW OF QUALITY IS ASSUMED FOR CORRECTNESS OF DIMENSIONS OR DETAILS.
APPROVED
APPROVED AS NOTED
APPROVED AS NOTED
RESUBMIT FOR REVIEW
Berries and Jones, Inc.
Structural Steel Specialists
MAR 22 1996
BY: [illegible]

NOTES:

1. ALL DIMENSIONS ARE GIVEN HORIZONTALLY.
2. ELEVATIONS ARE GIVEN TO TOP OF CONCRETE PAD.
3. ANCHOR BOLT SETTINGS MUST BE EXACT IN EVERY DETAIL IN ACCORDANCE WITH THIS DRAWING.
4. ANCHOR BOLTS ARE FURNISHED BY HIGH STEEL STRUCTURES, INC., AND SET BY OTHERS.
5. BACK NUT OFF ⅛" FROM FINGER TIGHT AND BURR THE THREADS.
6. AREAS OF GALVANIZING DAMAGED BY FIELD WELDING SHALL BE PAINTED WITH AN APPROVED SEALER IN ACCORDANCE WITH SUBSECTION 708.02(d).
7. ⊗ DENOTES THICK EDGE OF SOLE PLATE.

NO.	REVISION	DATE
△		
△		
△		

HIGH STEEL STRUCTURES, INC.
1770 Hempstead Road
Lancaster, PA 17605-0008
Phone 717/299-5211
A Division of High Industries, Inc.

ANCHOR BOLT PLAN
U.S. ROUTE 7 OVER OTTER CREEK
BRIDGE NO. 79
TOWN OF WALLINGFORD, COUNTY OF RUTLAND
STATE OF VERMONT
AGENCY OF TRANSPORTATION

STATE CONTRACT OR REF. NO.: PROJECT NO. BRS-0137(13)
CONTRACTOR: J. A. McDONALD, INC.
IN CHARGE: abs MADE BY: JCC CHK'D BY: [illegible] DATE: 1-31-96
CONTRACT NUMBER: VT-95367 DRAWING NUMBER: E1

400-7 APLN400