FED.ROAD DIV.NO.	STATE	FED. AID PROJ. NO.
	VT	

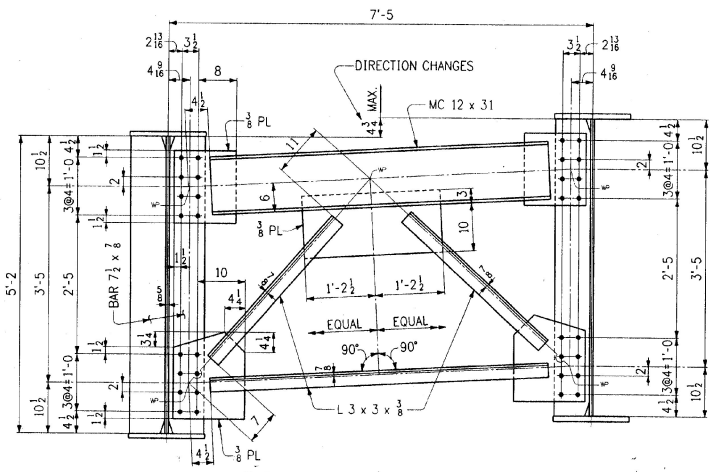

TYP. END AND PIER CROSSFRAME

(CFK14)

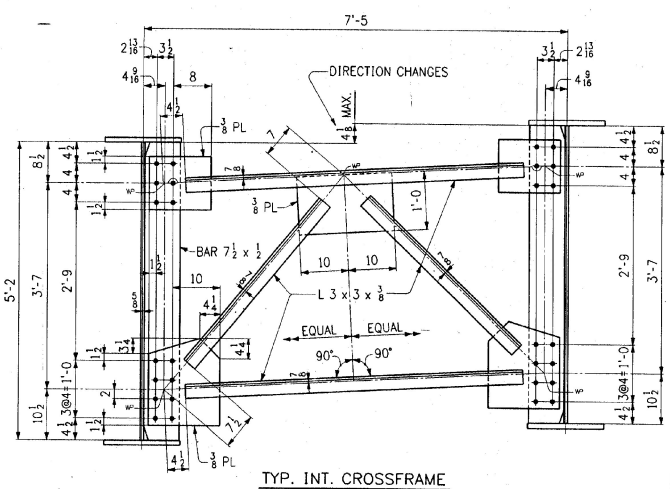

TYP. INT. CROSSFRAME

(CFK14)

NOTE:

ALL HOLES TO BE 15/16ø FOR 7/8ø HSB's.

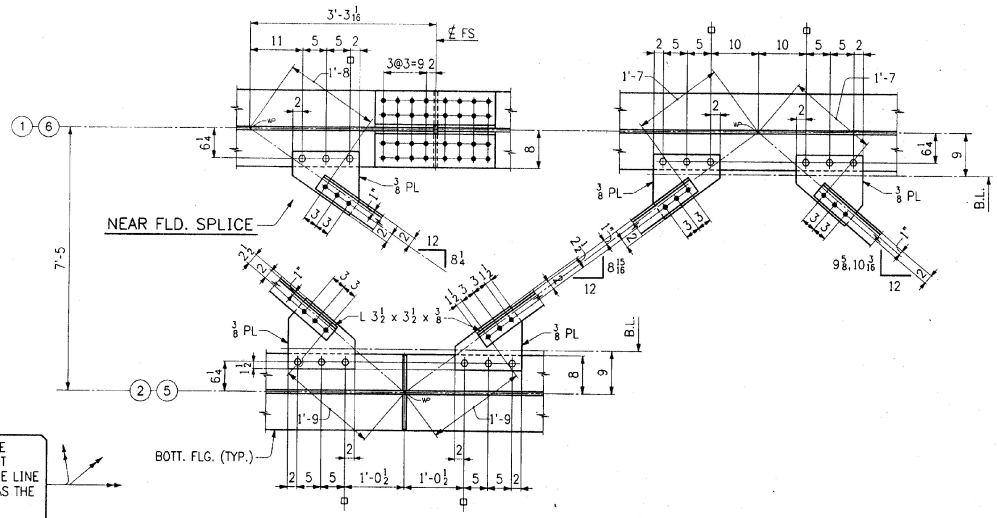

TYP. LATERAL BRACING

DETAILER NOTE: CARE MUST BE EXERCISED IN THE ASSIGNMENT OF GUSSET PLATE MARKS. GAGE LINE FOR HOLES IS NOT THE SAME AS THE "WL" AND PLATES CANNOT BE TURNED UPSIDE DOWN.

SHOP DRAWING REVIEW

REVIEW IS FOR GENERAL COMPLIANCE WITH CONTRACT DOCUMENTS. NO RESPONSIBILITY IS ASSUMED FOR CORRECTNESS OF DIMENSIONS OR DETAILS.

APPROVED
APPROVED AS NOTED
APPROVED AND RESUBMIT
REJECTED - SEE REMARKS

Barnes and Jarnis, Inc.
P.O. Box 1 - Stop 1
Montpelier, Vermont 05602

DATE MAR 22 1996 BY

THIS IS A WORK (W) DRAWING. ITS FUNCTION IS TO PROVIDE BASIC DIMENSIONS AND CONCEPTS FOR USE IN THE PREPARATION OF THE SHOP DETAILS. IT IS NOT INTENDED TO BE USED FOR ERECTION OR FABRICATION.

NO.	REVISION	DATE
△		
△		
△		

HIGH STEEL STRUCTURES, INC.
1770 Hempstead Road
Lancaster, PA 17605-0008
Phone 717/299-5211
A Division of High Industries, Inc.

WORKSHEET - LAYOUTS
U.S. ROUTE 7 OVER OTTER CREEK
BRIDGE NO. 79
TOWN OF WALLINGFORD, COUNTY OF RUTLAND
STATE OF VERMONT
AGENCY OF TRANSPORTATION

STATE CONTRACT OR REF. NO. PROJECT NO. BRS-0137(13)
CONTRACTOR J. A. McDONALD, INC.
IN CHARGE: abs MADE BY: LD 12-12 CHK'D BY: DATE: 1-6-96
CONTRACT NUMBER: VT-95367 DRAWING NUMBER: WS2

400-3

LYOT400A