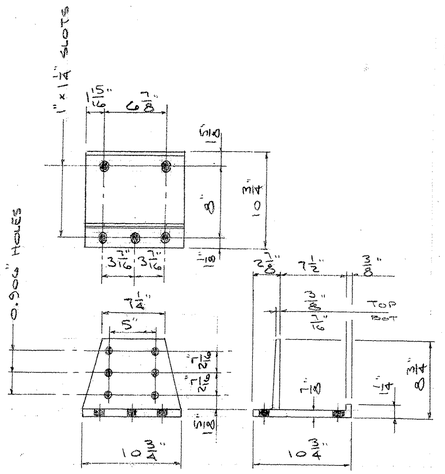


(12) POST BASE
ALLOY 6061-T6

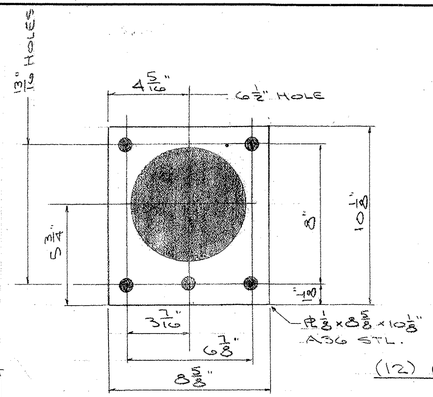


(12) ANCHOR PL
(PLAIN FINISH)

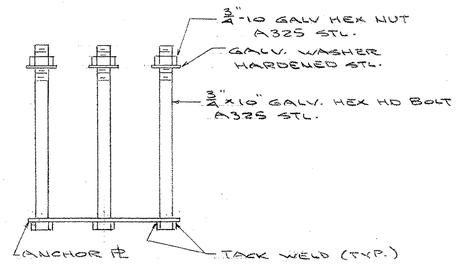


(12) ANCHOR BOLT ASS'Y

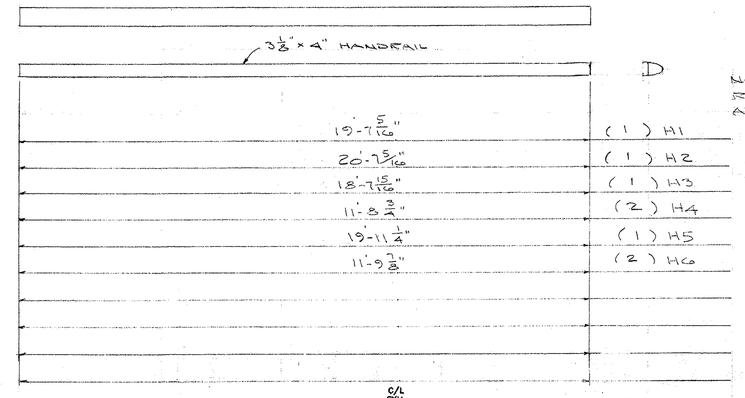


NOTE
RAIL LENGTHS
ADJUSTED FOR SLOPE.

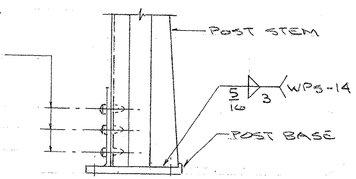


POST ASSY.

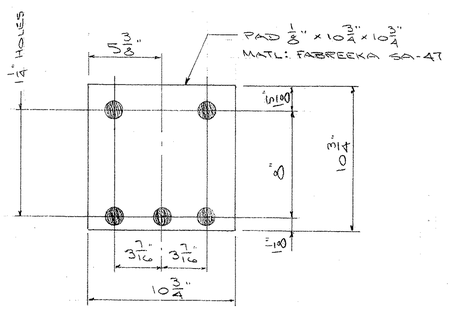


(12) POST PAD

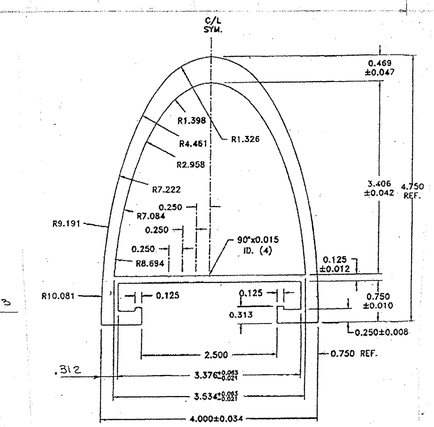


TRAFFIC RAIL EXTRUSION
ALLOY 6061-T6

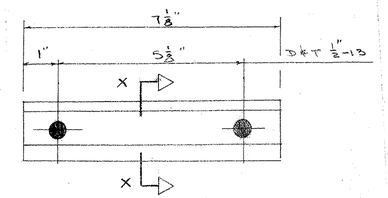


RAIL CLAMP BAR

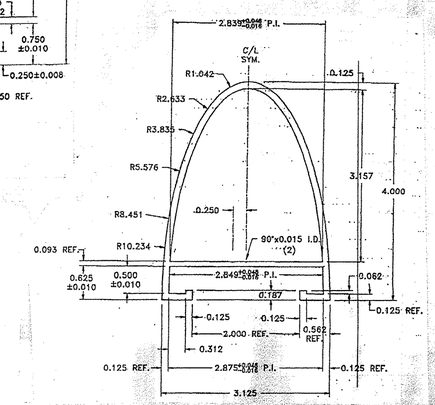


HANDRAIL EXTRUSION
ALLOY 6061-T6

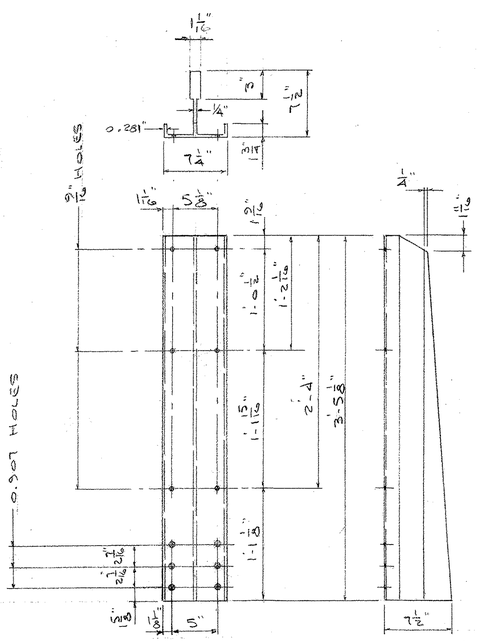


(6) POST STEM P2
ALLOY 6061-T6

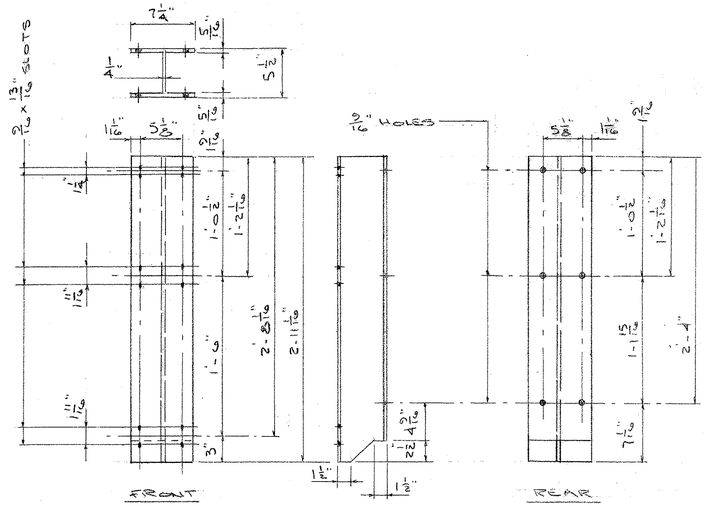


(6) STANDOFF SP-2
ALLOY 6061-T6

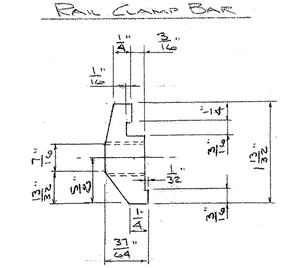

SECT. X-X
(56) #4 CLAMP BAR

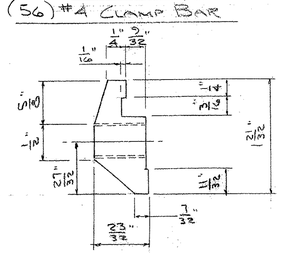

SECT. X-X
(160) #1 CLAMP BAR

RECEIVED
OK'D BY UBS OK'D BY
JUN 1 3 2009
APPROVED ✓
BY DATE 6-16-09

| ISSUE | DATE | DESCRIPTION | BY |
|---|---|---|---|
| 1 | 1-29-09 | FOR APPROVAL | B |

**AUCIELLO IRON WORKS INC**
560 MAIN ST. HUDSON, MA (978) 568-8382

VT. AGENCY OF TRANSPORTATION
WILLIAMSTOWN #BRS 0204(4)
ROUTE 64 OVER BROOK

AL. BRIDGE & APPROACH RAILING

SURFACE PREP: NONE
FINISH:

FOR: F.R. LAFAYETTE, INC.

DR: WM 01-15-09
CHK: KPP 1-22-09

DWG. NO. BR-2950

JOB NO. AB97005-1001

SHEET 6 OF 8

B.L. MANSFIELD INC. 106618