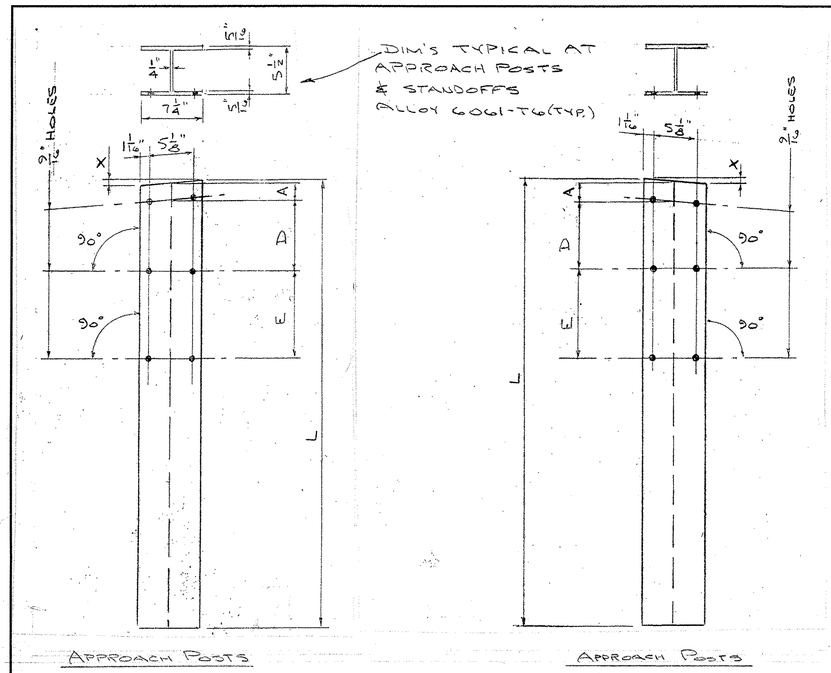

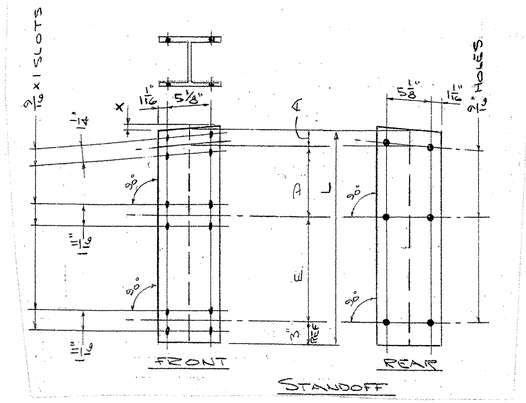

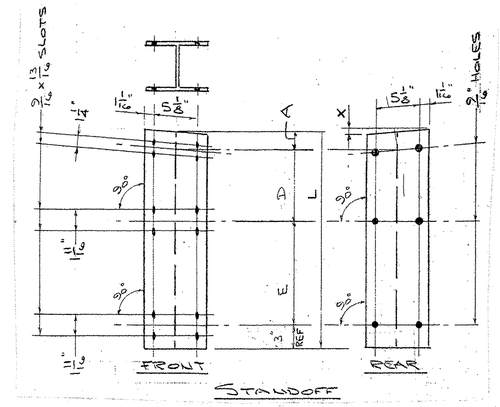

MK	QUAN	L	X	A	D	E
31L	1	2'-4 9/16"	7/16"	1 9/16"	11 7/16"	1'-0 9/16"
32L	1	2'-2 3/16"			9 3/4"	11 7/8"
33L	1	1'-11 7/8"			8 1/8"	11 3/16"
34L	1	1'-9 3/16"			6 7/16"	10 9/16"
35L	1	1'-2 5/8"	0"	2"	—	9 5/8"
36L	1	1'-1 3/4"			—	8 3/4"
37L	1	1'-0 7/8"			—	7 7/8"

MK	QUAN	L	X	A	D	E
31R	1	2'-4 9/16"	7/16"	1 9/16"	11 7/16"	1'-0 9/16"
32R	1	2'-2 3/16"			9 3/4"	11 7/8"
33R	1	1'-11 7/8"			8 1/8"	11 3/16"
34R	1	1'-9 3/16"			6 7/16"	10 9/16"
35R	1	1'-2 5/8"	0"	2"	—	9 5/8"
36R	1	1'-1 3/4"			—	8 3/4"
37R	1	1'-0 7/8"			—	7 7/8"

MK	QUAN	L	X	A	D	E
31L	1	6'-6"	7/16"	1 9/16"	11 7/16"	1'-0 9/16"
32L	1				9 3/4"	11 7/8"
33L	1				8 1/8"	11 3/16"
34L	1				6 7/16"	10 9/16"
35L	1	6'-0"	0"	2"	—	9 5/8"
36L	1				—	8 3/4"
37L	1				—	7 7/8"

MK	QUAN	L	X	A	D	E
31R	1	6'-6"	7/16"	1 9/16"	11 7/16"	1'-0 9/16"
32R	1				9 3/4"	11 7/8"
33R	1				8 1/8"	11 3/16"
34R	1				6 7/16"	10 9/16"
35R	1	6'-0"	0"	2"	—	9 5/8"
36R	1				—	8 3/4"
37R	1				—	7 7/8"

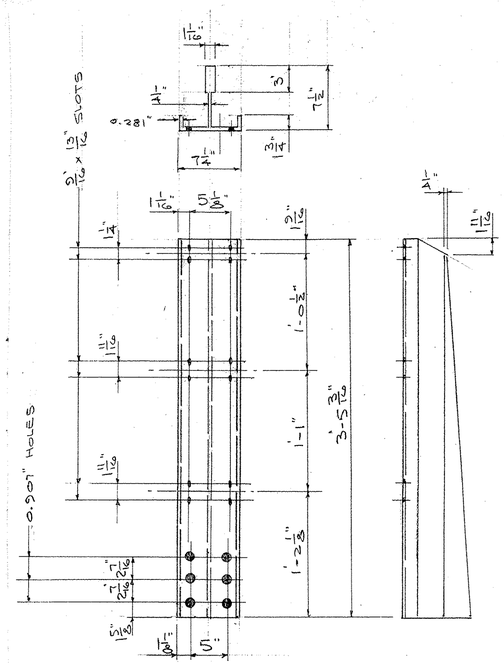

(6) POST STEM P1

ALLOY 6061-T6

RECEIVED
OK'D BY UDS OK'D BY MSM
JUN 9 32
RESUBMIT APPROVED ✓
BY DATE 6-16-09

ISSUE	DATE	DESCRIPTION	BY
1	1.28.09	FOR APPROVAL	

AUCIELLO IRON WORKS INC
560 MAIN ST. HUDSON, MA (978) 568-8382

V.T. AGENCY OF TRANSPORTATION
WILLIAMSTOWN "BRS 0204(4)
ROUTE 64 OVER BROOK

BRIDGE & APPROACH RAILING

SURFACE PREP: NONE
FINISH: MILL FINISH
FOR: F.R. LAFAYETTE, INC.
DR: WM 01-13-09
CHK: MM 1-22-09
DWG. NO. BR-2950
JOB NO. A557005-1001
SHEET 5 OF 8

BL MARKSPACE INC. 100016