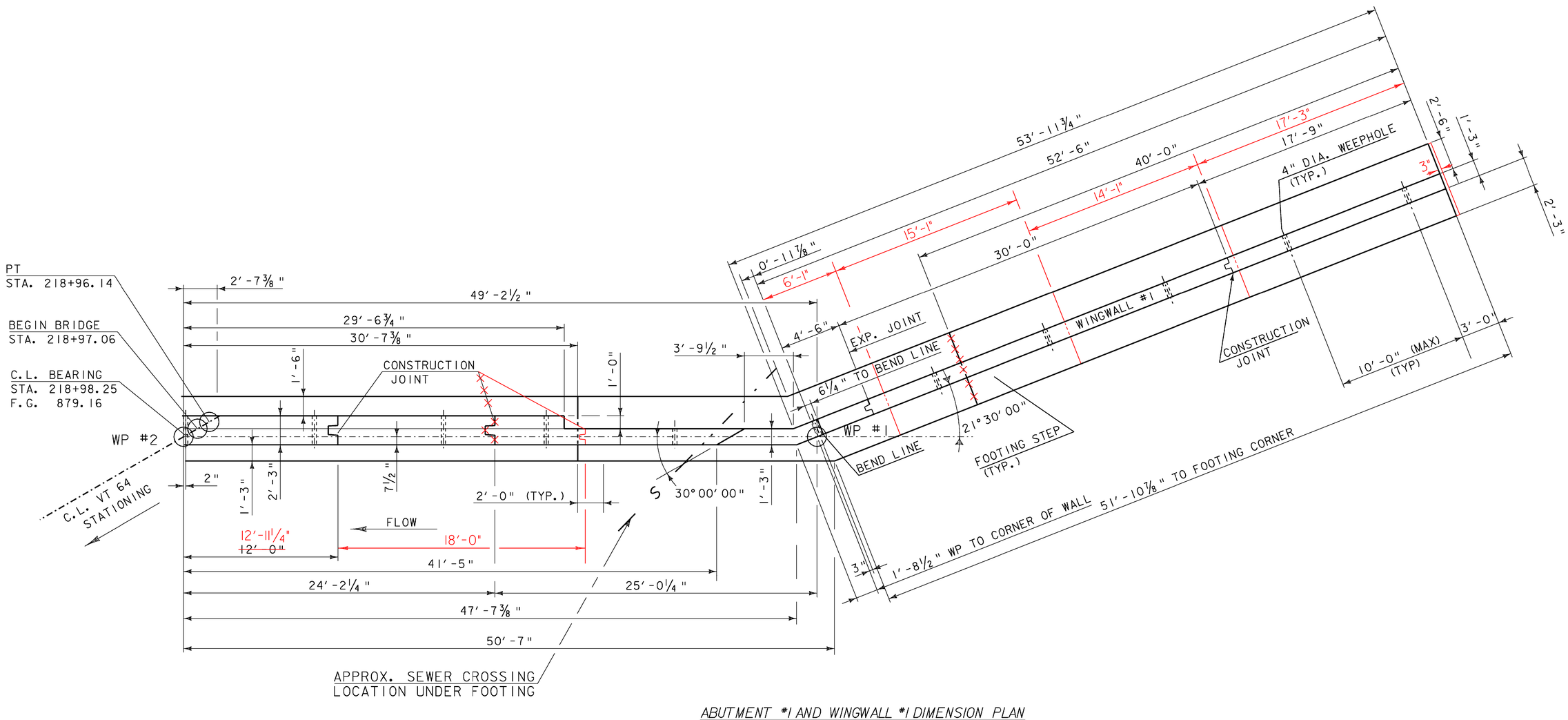

ABUTMENT #1 AND WINGWALL #1 DIMENSION PLAN

SCALE 1/4" = 1'-0

1 0 2 4 6

ABUTMENT #1 AND WINGWALL #1 LAYOUT

PROJECT NAME:	WILLIAMSTOWN
PROJECT NUMBER:	BRS 0204(4)

FILE NAME: 83ell\str.\sellabut1.dg	PLOT DATE: 07-APR-2008
PROJECT LEADER: M.EVANS.MONGEON	DRAWN BY: G.ROKES
DESIGNED BY: M.EVANS-MONGEON	CHECKED BY: U.STANLEY
IPARM sellsub2.1	SHEET 54 OF 108