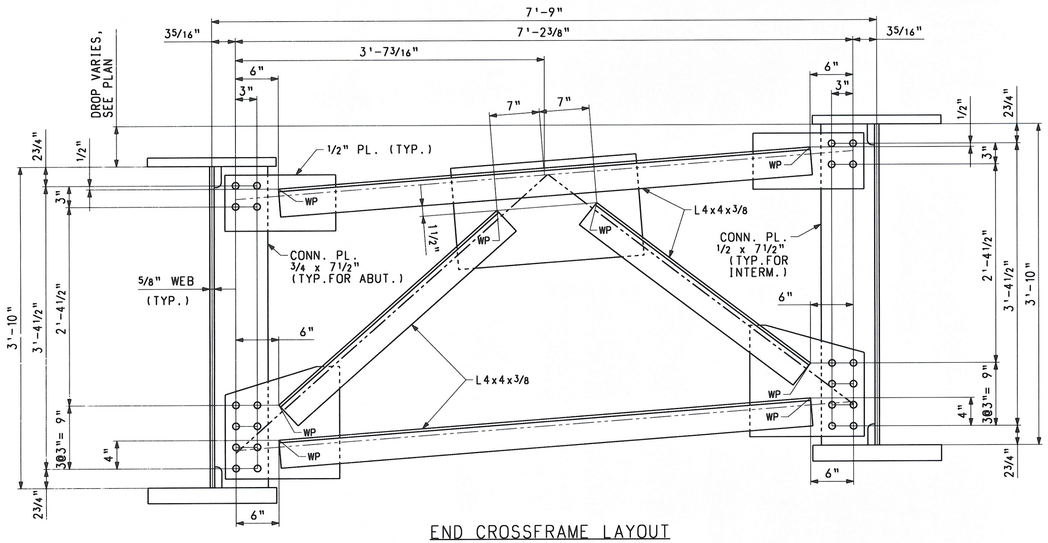

END CROSSFRAME LAYOUT

(LOOKING TOWARDS BACKWALL FROM CENTER OF SPAN BETWEEN G3 THRU G5)

INTERM. CROSSFRAME LAYOUT

(LOOKING STATIONS AHEAD BETWEEN G3 & G5)

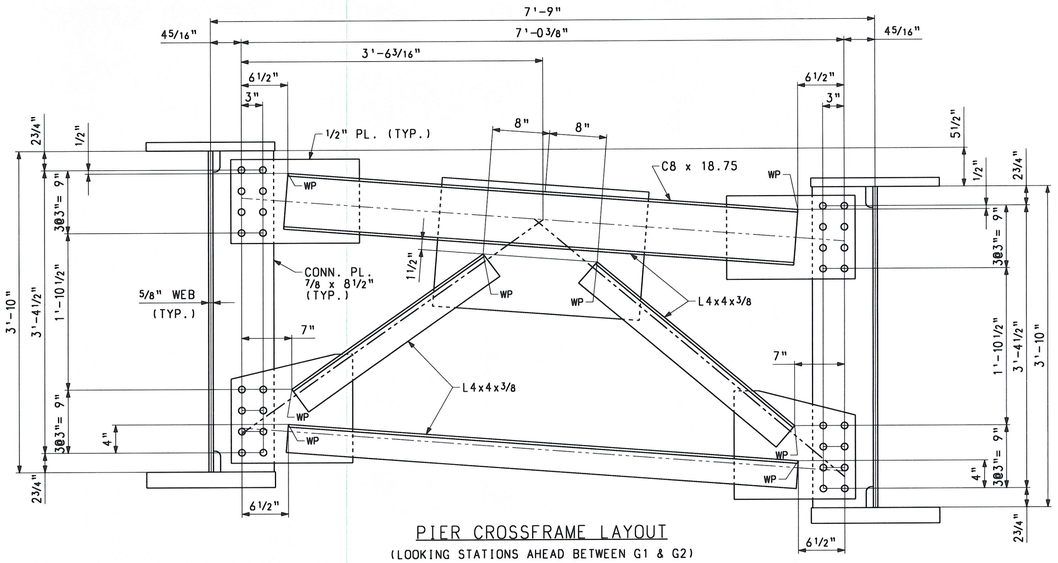

PIER CROSSFRAME LAYOUT

(LOOKING STATIONS AHEAD BETWEEN G1 & G2)

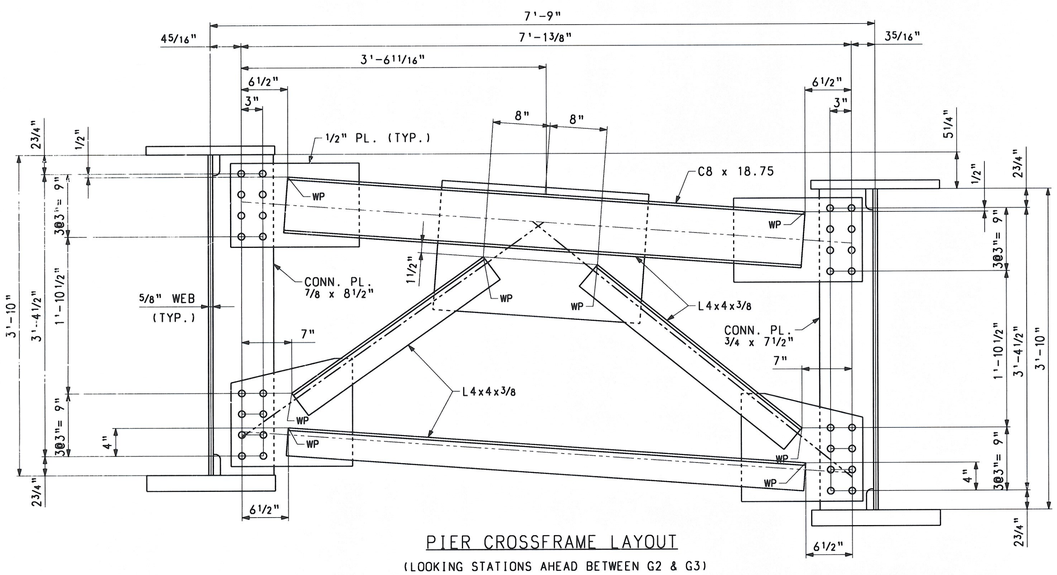

PIER CROSSFRAME LAYOUT

(LOOKING STATIONS AHEAD BETWEEN G2 & G3)

NOTES:

FOR NOTES, SEE DRAWING WS1.
WORK THIS DRAWING WITH WS1.

NOTE
THE PURPOSE OF THIS DRAWING IS TO COORDINATE GEOMETRIC CONTROL INFORMATION. THIS DRAWING IS SUBMITTED FOR INFORMATION ONLY AND IS NOT INTENDED FOR SHOP FABRICATION. THIS DRAWING IS FOR REFERENCE ONLY. APPROVAL IS NOT REQUIRED.

RECEIVED
CK'D BY JL OK'D BY JEL
AUG 18 2008
RESUBMIT ____ APPROVED ✓
BY KMH DATE 8/19/08

NO.	REVISION	BY	CHK'D	DATE
△				
△				
△				

HIGH STEEL STRUCTURES INC.
1915 Old Philadelphia Pike
Lancaster, PA 17605-0008
Phone (717) 299-5211
www.highsteel.com
An ISO 9001:2000 Certified Company
An Affiliate of High Industries Inc.

HOLES: 15/16" Ø
BOLTS: NONE
COATING: NONE
CODE(S):
SCALE: N.T.S.

TYPICAL DETAILS - CROSSFRAME LAYOUTS
VT ROUTE 100 (MINOR ARTERIAL) OVER WHITE RIVER
VT ROUTE 100 STA. 141+39.00 TO STA. 143+61.00
TOWN OF STOCKBRIDGE, COUNTY OF WINDSOR, VERMONT
STATE OF VERMONT
AGENCY OF TRANSPORTATION

STATE CONT. OR REF. NO.	PROJECT NO. (STP) BRF 013-4(21)	FED. AID PROJ. NO.	
GENERAL CONTRACTOR	WINTERSET, INC.	HSSI PROJ. MGR	DEB KUPRES
SHPMT 1	DRAWING MANAGER: KREIDER (IH)	MADE BY: KLW	CHK'D BY: CS	DATE: 6/17/08
STATE VT	HSSI PROJECT NUMBER: S-1080077	HSSI STRUCT. ID: A	DRAWING NUMBER: TD2 OF TD3

1080077A X2 8/7/08 8/Resubmit For Approval TO:Winterset, Inc.

SHIPMENT 1 PMXENG: XXXXXXXX PRD: XXXXXXXX SHIPMECRECT: XXXXXXX
PLOTTED: 06/25/08 15:45:16 BY: MKreidel