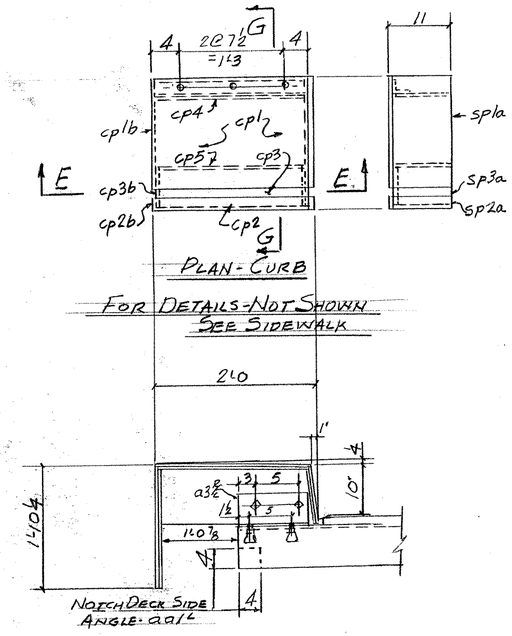

PLAN - CURB

FOR DETAILS - NOT SHOWN SEE SIDEWALK

SECTION - E - E

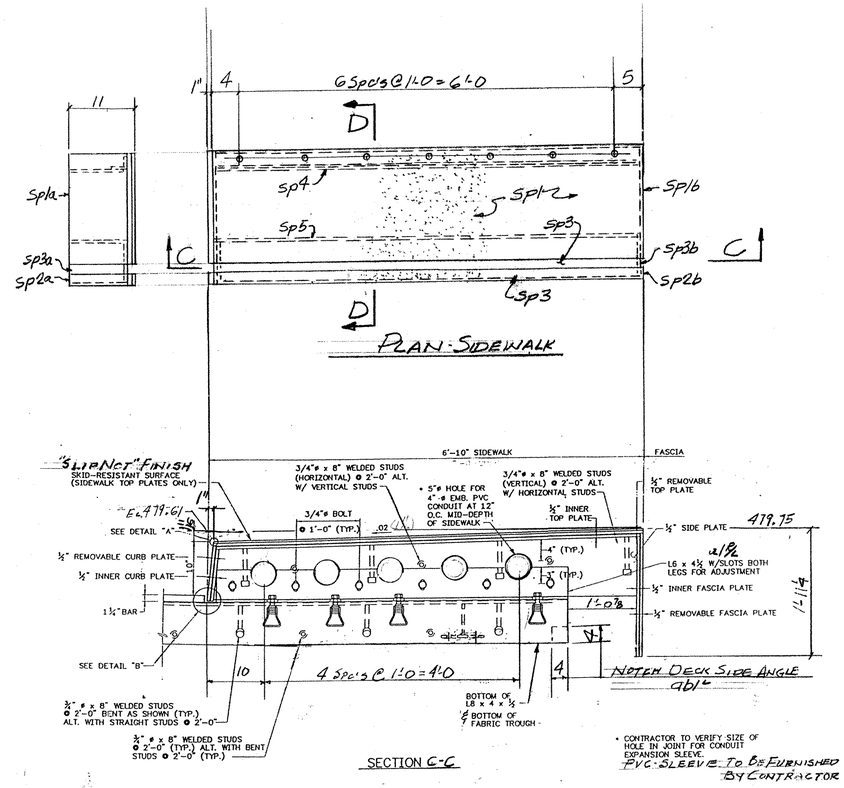

SECTION C-C

• CONTRACTOR TO VERIFY SIZE OF HOLE IN JOINT FOR CONDUIT EXPANSION SLEEVE.
PVC SLEEVE TO BE FURNISHED BY CONTRACTOR

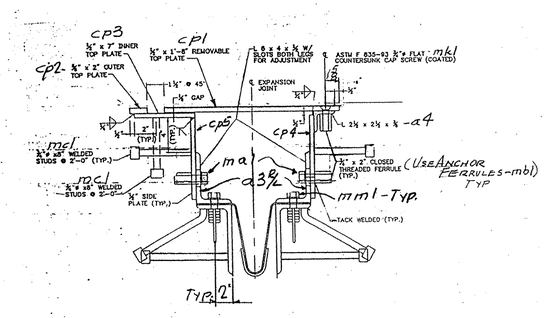

G-G

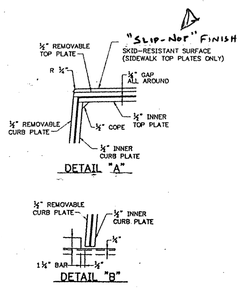

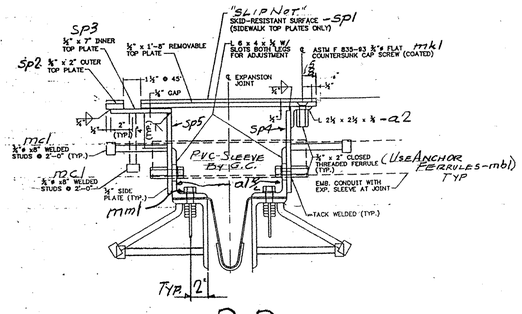

D-D

REV.	REMARKS	DATE	DWN	CHK	APP	Q.A.	NO.	DIA.	LGT	TYPE	WASHER
	OUT FOR APPROVAL	1-19-05									
	OUT FOR APPROVAL	4-6-05									
	ISSUED TO SHOP										
	FIELD & OFFICE										
1	APPROVAL COMMENTS	3/28/05									

PROJECT NO. BRS-0147(5)S STATE PROJECT NO. 21

MATERIAL: AASHTO M270-GR36 | ELECTRODES: PER PROC | HOLES: AS NOTED | SHOP BOLTS: ¾"ø M164-GALV.

SURFACE PREP. & PAINT:

GALV. AFTER FAB (ASTM-A123)
HARDWARE (ASTM-A153)

DESCRIPTION: EXP. JOINT - ABUT. No. 1

JOB:

VT. RT. 14 OVER FIRST BRANCH OF WHITE RIVER ROYALTON, VT.

CUSTOMER: BECK & BELLUCCI

	DRAWN BY	DATE
	JPF	1-05
	CHKD BY	
	EJ	
	APPROV BY	
	Q.A.	
	JOB NO.	DRG. NO.
	250	J1A
		REV. 1

CASCO BAY STEEL STRUCTURES, INC.
75 SPRING HILL ROAD SACO, MAINE 04072
PHONE (207) 282-7360 FAX. (207) 282-1179

1" = 1'-0"