JOB NO.	DRG. NO.
250	J1A

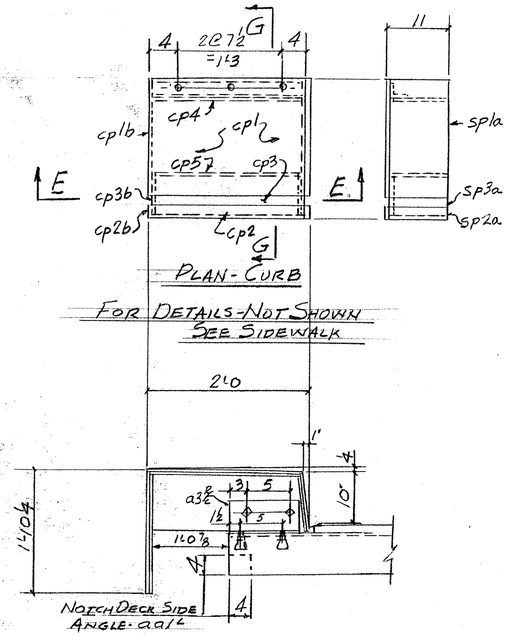

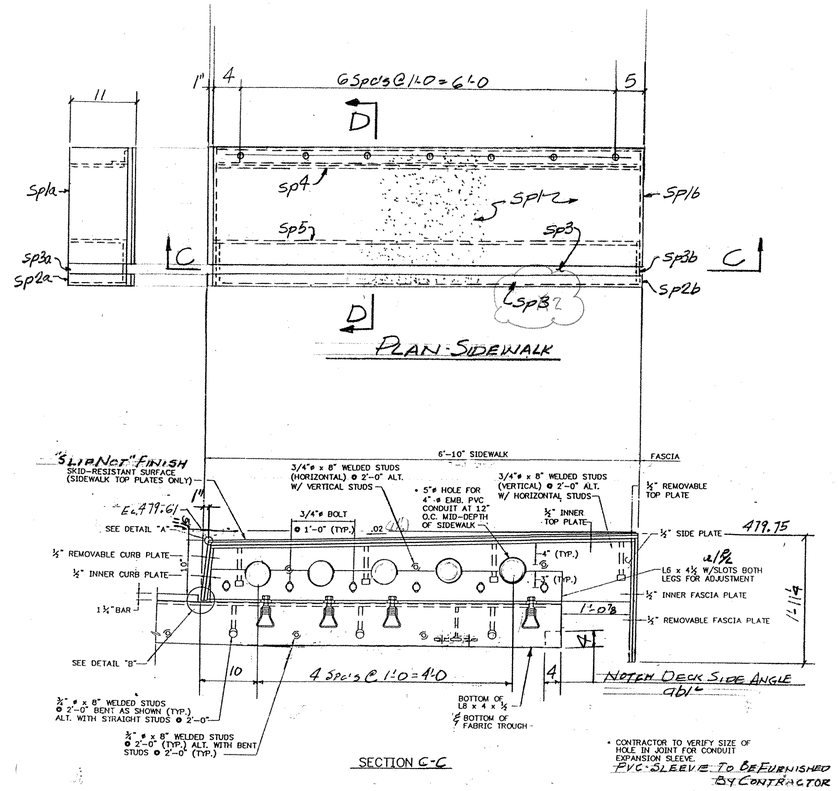

* CONTRACTOR TO VERIFY SIZE OF HOLE IN JOINT FOR CONDUIT EXPANSION SLEEVE.
PVC-SLEEVE TO BE FURNISHED BY CONTRACTOR

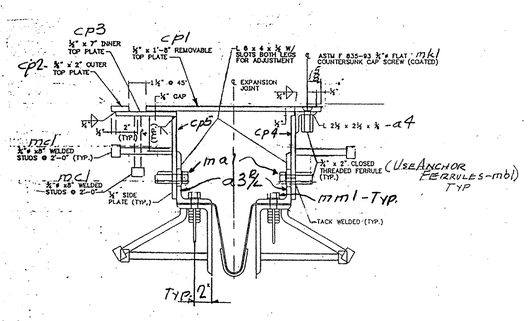

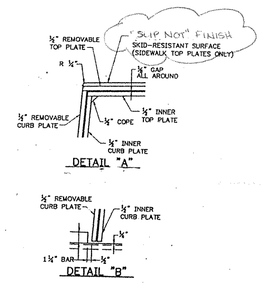

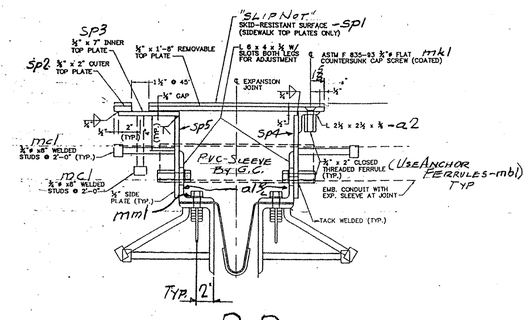

VTrans
RECEIVED
CK'D BY JWC OK'D BY
FEB 04 2005
RESUBMIT APPROVED "AS NOTED"
BY DATE 3/21/2005

REV.	REMARKS	DATE	DWN	CHK	APP	Q.A.	NO.	DIA.	LGT	TYPE	WASHER
	OUT FOR APPROVAL	1-19	05								
	OUT FOR APPROVAL										
	ISSUED TO SHOP										
	FIELD & OFFICE										

PROJECT NO. BRS-0147(5)S STATE PROJECT NO. 21

MATERIAL: AASHTO M270-GR36 ELECTRODES: PER PROC HOLES: AS NOTED SHOP BOLTS: ¾"ø M164-GALV.

SURFACE PREP. & PAINT:
GALV. AFTER FAB (ASTM-A123)
HARDWARE (ASTM-A153)

DESCRIPTION: EXP. JOINT - ABUT. NO. 1

JOB: VT. RT. 14 OVER FIRST BRANCH OF WHITE RIVER ROYALTON, VT.

	DRAWN BY	DATE
	JPF	1-05
	CHK'D BY	
	EJ	
	APPROV BY	
	Q.A.	

CUSTOMER: BECK & BELLUCCI

CASCO BAY STEEL STRUCTURES, INC.
75 SPRING HILL ROAD SACO, MAINE 04072
PHONE (207) 282-7360 FAX. (207) 282-1179

JOB NO.	DRG. NO.
250	J1A
	REV. △

1" = 1'-0"