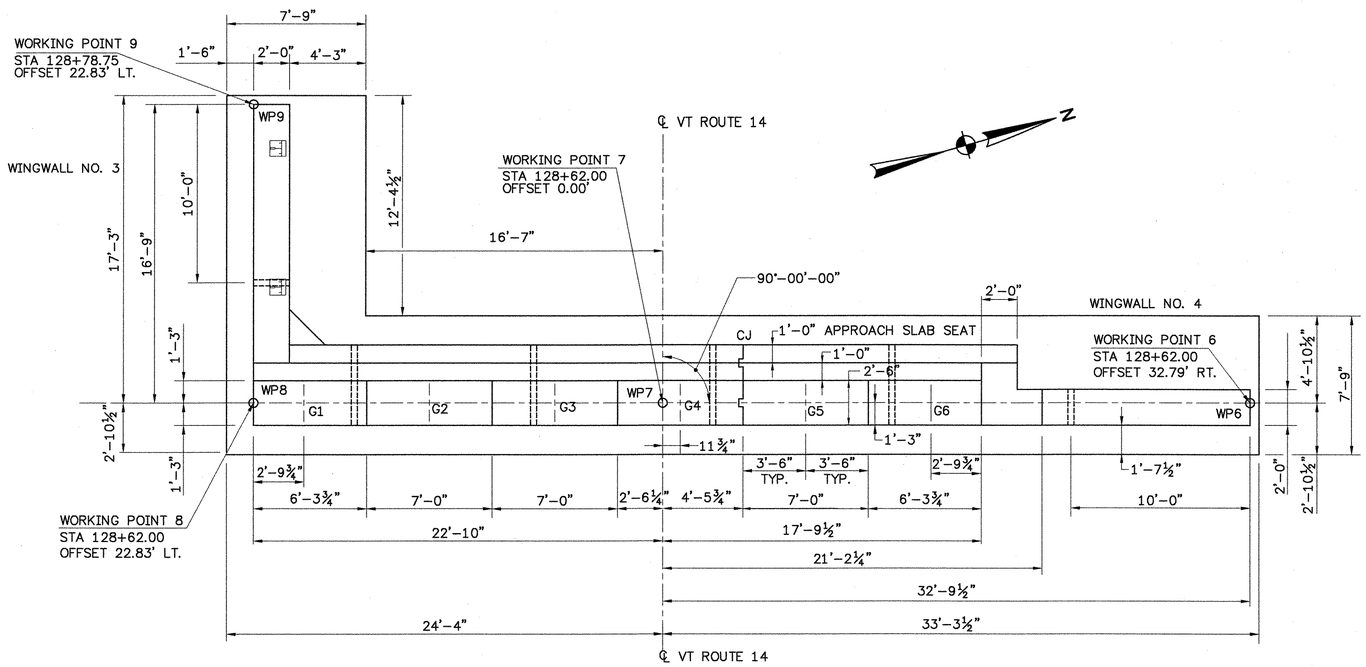

ABUTMENT NO.2 PLAN (FIXED)

Scale: ¼"=1'-0"

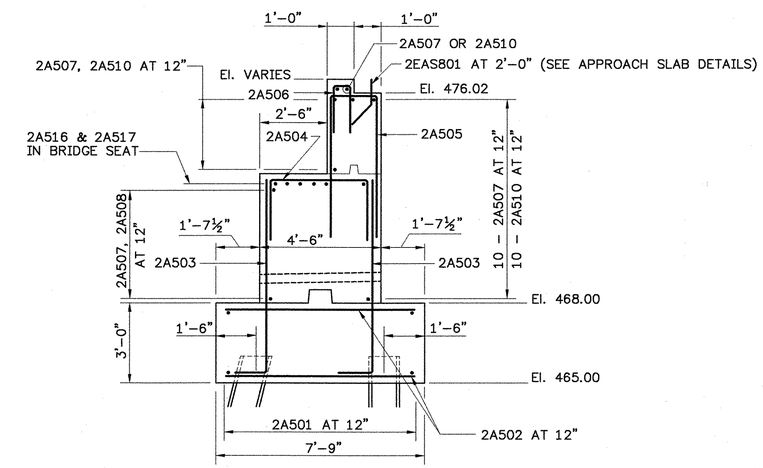

TYPICAL ABUTMENT NO.2 SECTION (FIXED)

Scale: ⅜"=1'-0"

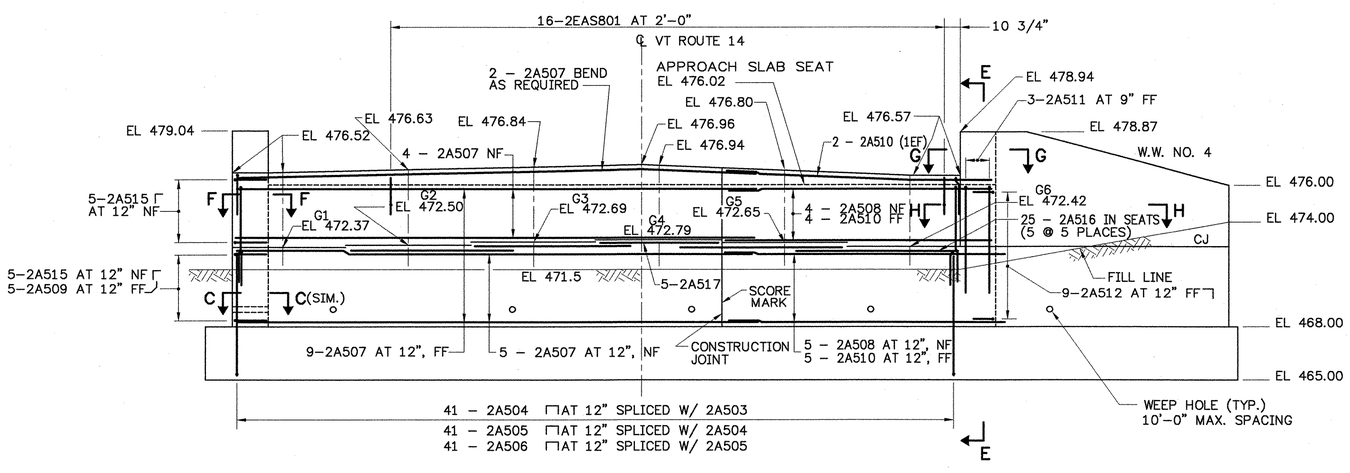

ABUTMENT NO.2 ELEVATION (FIXED)

Scale: ¼"=1'-0"

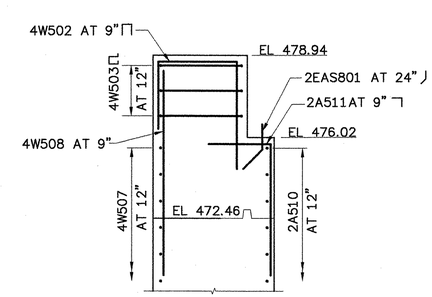

SECTION E-E

SCALE: ⅜"=1'-0"

▲ CUT TO FIT IN FIELD
FF FAR FACE
NF NEAR FACE
EF EACH FACE
EW EACH WAY

FOR SECTIONS SEE BRIDGE SHEET 56

STATE OF VERMONT
AGENCY OF TRANSPORTATION

Town Of	ROYALTON	Bridge No.	21
Highway No.	VT. ROUTE 14	Log Sta. / Surv. Sta.	

VT. Route 14 over the White River

ABUTMENT NO. 2 DETAILS

Designed By	VES	Drawn By.	VES/PHL
Checked By CLW/LMM	Date 11/00	Bridge Design Supervisor LMM	Date 11/00
PROJECT ROYALTON		PROJECT NO. BRS 0147(5) S	
I.G.C. Info.			
Bridge Sheet No.		Sheet 54 Of 76	

CLD
Costello, Lomasney & de Napoli, Inc.
Consulting Engineers
540 Commercial Street
Manchester, NH 03101
(603)668-8223 FAX(603)668-8802

DRAWING NAME (1=2)