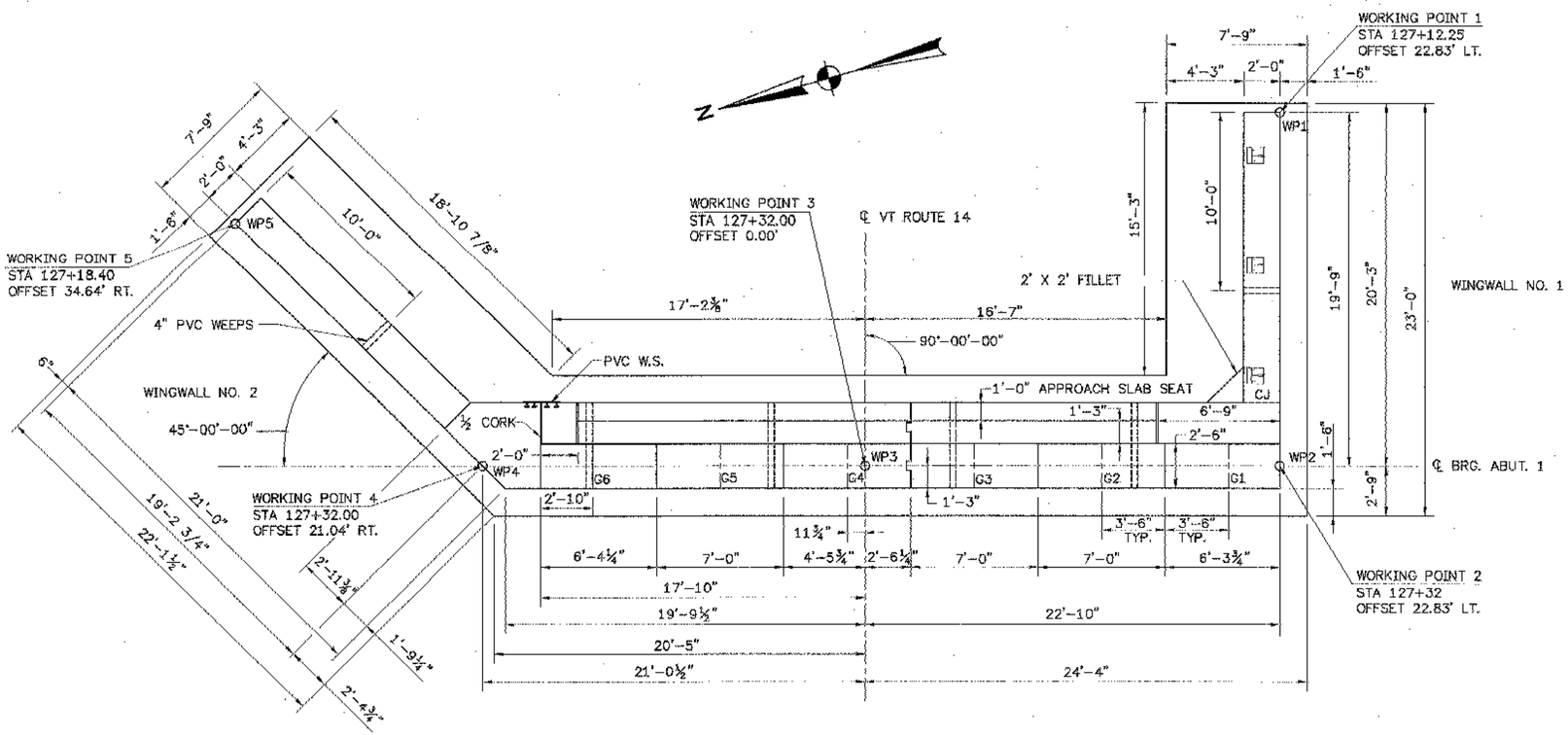

ABUTMENT NO.1 PLAN (EXP.)

Scale: ¼"=1'-0"

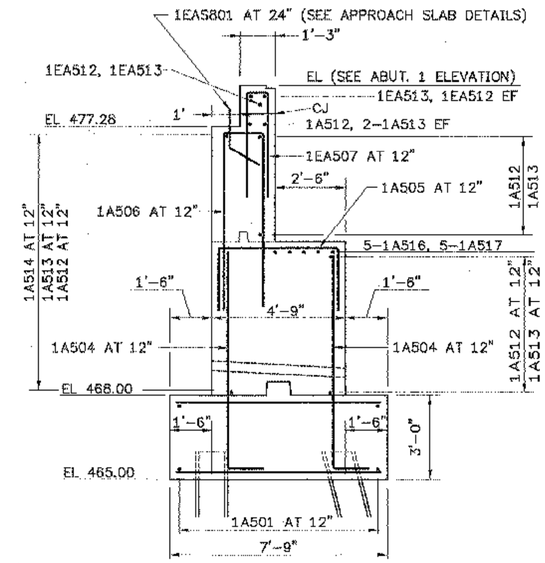

TYPICAL ABUTMENT NO.1 SECTION (EXP.)

Scale: ⅜"=1'-0"

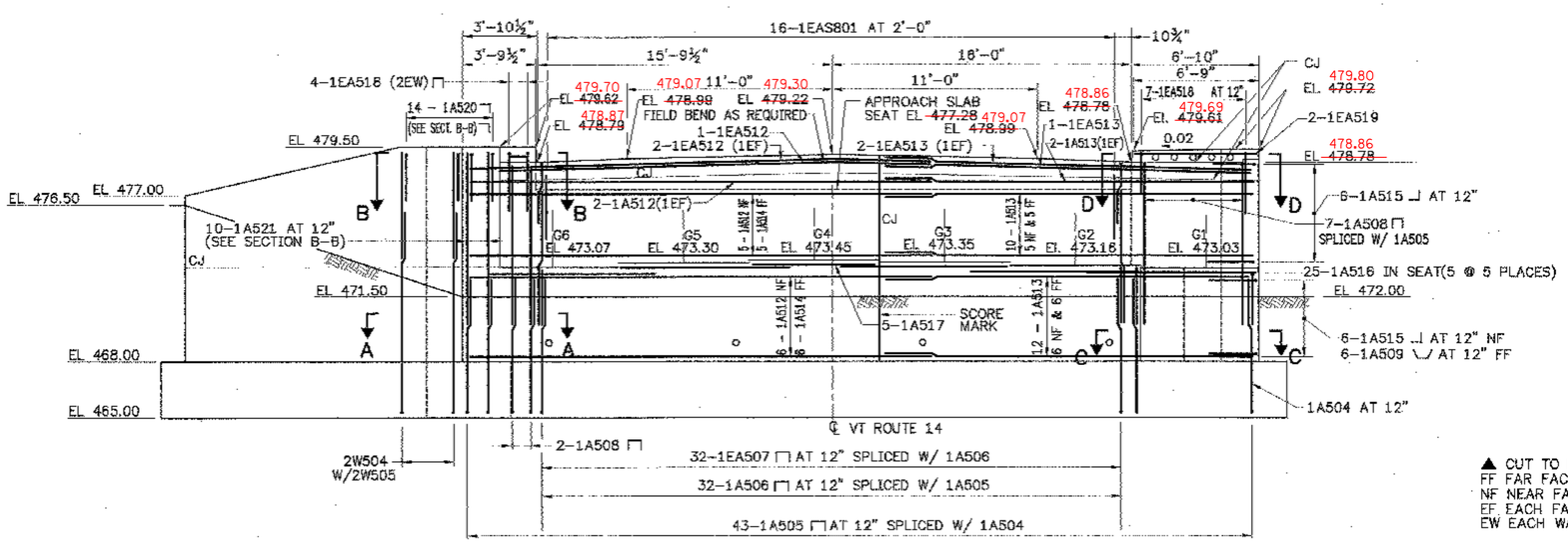

ABUTMENT NO.1 ELEVATION (EXP.)

Scale: ¼"=1'-0"

▲ CUT TO FIT IN FIELD
FF FAR FACE
NF NEAR FACE
EF EACH FACE
EW EACH WAY

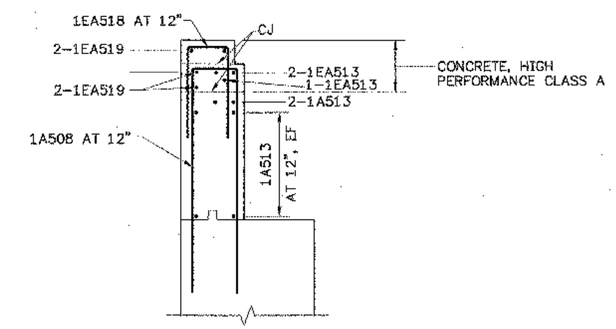

TYPICAL ABUTMENT NO.1 AT SIDEWALK

Scale: ⅜"=1'-0"

STATE OF VERMONT
AGENCY OF TRANSPORTATION

Town Of	ROYALTON	Bridge No.	21
Highway No.	VT. ROUTE 14	Log Sta.	
		Surv. Sta.	

VT. Route 14 over the White River

ABUTMENT NO. 1 DETAILS

Designed By	VES	Drawn By.	VES/PHL
Checked By CLW/LMM	Date 11/00	Bridge Design Supervisor LMM	Date 11/00
PROJECT ROYALTON		PROJECT NO. BRS 0147(5) S	
I.G.C. Info.			
Bridge Sheet No.		Sheet 53 Of 76	

CLD Consulting Engineers
Consulting Engineers
590 Commercial Street
Manchester, NH 03101
(603)669-5555 FAX(603)668-8802