SEE SHEET 2 FOR INDEX OF SHEETS
AND LIST OF STANDARDS

RECORD PLANS	
CONTRACTOR:	WINTERSET, INC.– LYNDONVILLE, VT
RESIDENT ENGINEER:	BOB SUCKERT
CONSTRUCTION BEGAN:	SEPTEMBER 14, 2009
CONSTRUCTION COMPLETE:	NOVEMBER 22, 2010
RECORD PLANS BY:	BOB SUCKERT & JENNA HYDE

I HEREBY CERTIFY THAT ALL THE CONSTUCTION REQUIRED BY THIS SET OF DRAWINGS HAS BEEN ACCOMPLISHED AS INDICATED HEREIN.

BY _____ RESIDENT ENGINEER

DATE 8-14-15

NOTE: Any further information concerning final quantities, amounts or other details relative to this project may be found at Central Files in the electronic archives.

STATE OF VERMONT
AGENCY OF TRANSPORTATION



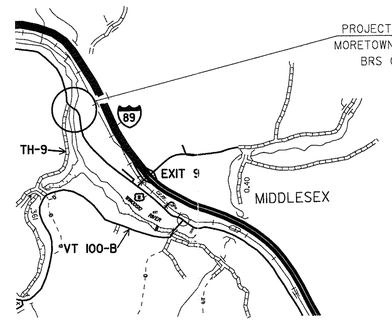

PROPOSED IMPROVEMENT

BRIDGE PROJECT
TOWNS OF MORETOWN-MIDDLESEX
COUNTY OF WASHINGTON
US. RTE. 2
MAJOR COLLECTOR

BEGINNING AT A POINT IN THE TOWN OF MORETOWN ALONG U.S. RTE. 2 APPROXIMATELY 3.075 MILES EASTERLY OF THE DUXBURY-MORETOWN TOWN LINE AND EXTENDING EASTERLY 0.52 MILES TO THE MORETOWN-MIDDLESEX TOWN LINE. IT THEN EXTENDS EASTERLY OF THE MORETOWN-MIDDLESEX TOWN LINE 0.085 MILES.

LENGTH OF ROADWAY	964.52 FT. =	0.183 MILES
LENGTH OF BRIDGE	285.48 FT. =	0.054 MILES
LENGTH OF PROJECT	1250.00 FT. =	0.237 MILES

WORK TO BE PERFORMED UNDER THIS PROJECT INCLUDES REMOVAL OF A TEMPORARY BRIDGE AT BRIDGE #50 AND CONSTRUCTION OF A NEW, TWO SPAN BRIDGE, INCLUDING RELATED CHANNEL WORK, APPROACHES ON A NEW ALIGNMENT, GRADING, DRAINAGE, SUBBASE, PAVEMENT, AND GUARD RAIL.

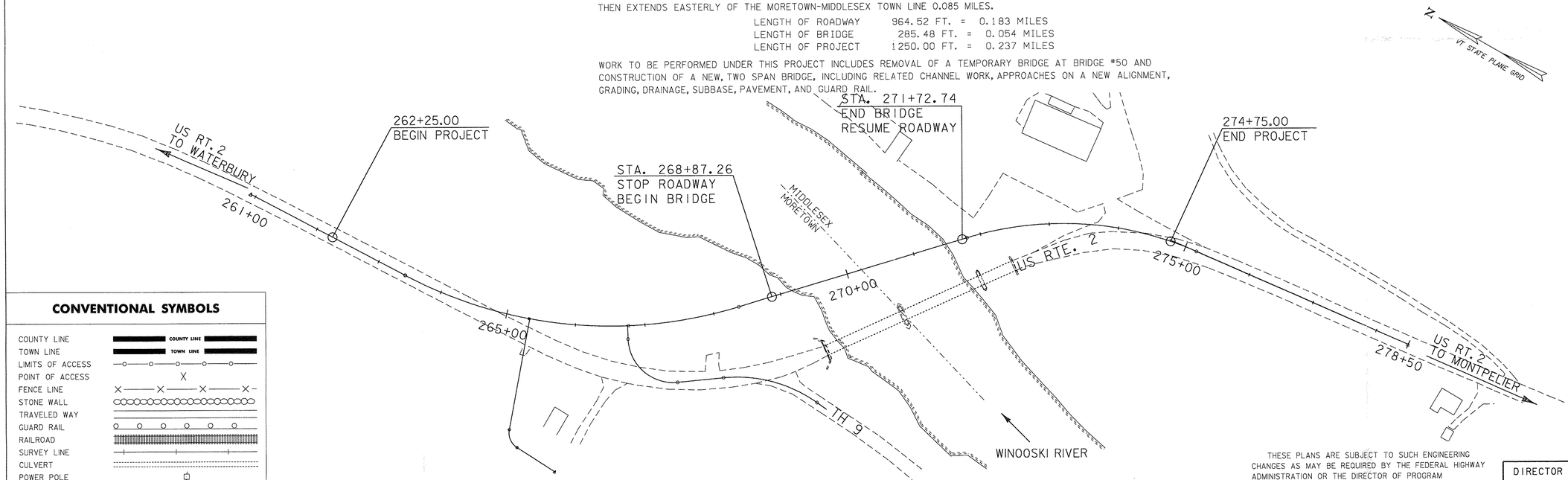

CONVENTIONAL SYMBOLS

COUNTY LINE
TOWN LINE
LIMITS OF ACCESS
POINT OF ACCESS
FENCE LINE
STONE WALL
TRAVELED WAY
GUARD RAIL
RAILROAD
SURVEY LINE
CULVERT
POWER POLE
TELEPHONE POLE
TREES
CONTROL OF ACCESS
PROPERTY LINE
R.O.W. TAKING LINE
SLOPE RIGHTS
TOP OF CUT
TOE OF SLOPE

SURVEYED BY : R. MOREAU
SURVEYED DATE : 9/91

DATUM
VERTICAL NAVD 83
HORIZONTAL NAD 88

0 75 150
SCALE

THESE PLANS ARE SUBJECT TO SUCH ENGINEERING CHANGES AS MAY BE REQUIRED BY THE FEDERAL HIGHWAY ADMINISTRATION OR THE DIRECTOR OF PROGRAM DEVELOPMENT.

CONSTRUCTION IS TO BE CARRIED ON IN ACCORDANCE WITH THESE PLANS AND THE STANDARD SPECIFICATIONS FOR CONSTRUCTION DATED 2006, AS APPROVED BY THE FEDERAL HIGHWAY ADMINISTRATION ON JUNE 15, 2006 FOR USE ON THIS PROJECT, INCLUDING ALL SUBSEQUENT REVISIONS AND SUCH REVISED SPECIFICATIONS AND SPECIAL PROVISIONS AS ARE INCORPORATED IN THESE PLANS.

DIRECTOR OF PROGRAM DEVELOPMENT
APPROVED Richard Petrauls DATE 5-19-09

PROJECT MANAGER : M. EVANS-MONGEON

PROJECT NAME : MORETOWN-MIDDLESEX
PROJECT NUMBER : BRS 0284(14)

SHEET 1 OF 103 SHEETS

STATE OF VERMONT
AGENCY OF TRANSPORTATION

PRELIMINARY INFORMATION SHEET

INDEX OF SHEETS

INDEX OF SHEETS

		STANDARDS LIST	
1	TITLE SHEET		
2	PRELIMINARY INFORMATION SHEET		
3-5	TYPICAL SECTIONS	A-76	3/3/2003
6-9	QUANTITY SHEETS	B-5	6/1/1994
10-11	TIE SHEETS	B-12	6/1/1994
12-14	LAYOUT SHEETS	B-71	7/8/2005
15-16	DITCH LAYOUT SHEETS	C-10	2/11/2008
17-19	US 2 PROFILE SHEETS	D-1	6/1/1994
20	TH #9 PROFILE SHEET	E-100	1/2/2004
21-22	EROSION CONTROL NARRATIVE	E-100A	1/2/2004
23-25	EPSC EXISTING CONDITIONS SHEETS	E-101	5/30/2003
26-28	EPSC CONSTRUCTION SHEETS	E-102	6/30/2003
29-31	EPSC FINAL CONDITIONS SHEETS	E-102A	5/1/2004
32-34	EPSC DETAIL SHEETS	E-107	6/30/2003
35.	LANDSCAPE TREE PLANTING DETAIL	E-107A	8/8/1995
36.	TRAFFIC CONTROL SHEET	E-121	8/8/1995
37	TRAFFIC SIGN LAYOUT SHEET	E-124	8/8/1995
38.	TRAFFIC SIGN SUMMARY SHEET	E-134	8/8/1995
39.	BORING LAYOUT SHEET	E-141	9/20/1995
40-42	BORING LOG SHEET	E-142	9/20/1995
43	PLAN AND ELEVATION SHEET	E-143	6/15/2004
44	GENERAL NOTES SHEET	E-151	5/1/2004
45	DECK REINFORCING PLAN	E-155	5/1/2004
46-47	FRAMING PLAN SHEETS	E-160	5/20/1999
48	STRUCTURAL STEEL DETAILS	E-193	8/18/1995
49	BEAM SPLICE/HAUNCH DETAILS	F-4	6/1/1994
50-52	BEARING DETAILS	G-1	1/3/2000
53	EXPANSION JOINT PLAN ABUTMENT 1	G-1D	1/3/2000
54	EXPANSION JOINT PLAN ABUTMENT 2	J-3	8/7/1995
55	EXPANSION JOINT DETAILS		
56	CURB EXPANSION JOINT DETAILS		
57	APPROACH SLAB DETAILS		
58	DOWNSPOUT DETAILS		
59-60	MID SPAN DOWNSPOUT DETAILS		
61-62	SUPERSTRUCTURE DETAILS		
63	BACKWALL DETAILS		
64	ABUTMENT #1 DETAILS		
65	ABUTMENT #2 DETAILS		
66	WINGWALL #1 & #2 DETAILS		
67.	PILE LAYOUT SHEET		
68	WINGWALL #3 & #4 DETAILS		
69	PIER DETAILS		
70	FOOTING REINFORCING PLAN		
71	REINFORCING STEEL SCHEDULE		
72	BRIDGE RAILING DETAILS		
73	APPROACH SLAB RAILING DETAILS		
74	APPROACH RAILING DETAILS		
75-76	R.O.W. DETAIL SHEETS		
77-79	R.O.W. LAYOUT SHEETS		
80	BANKING DIAGRAM		
81	MATERIAL TRANSITION DIAGRAM		
82-91	ROADWAY CROSS-SECTION SHEETS		
92-98	CHANNEL CROSS-SECTION SHEETS		
99-102	TH #9 CROSS-SECTION SHEETS		
103.	DRIVE SECTION 265+34.00 RT		

FINAL HYDRAULIC REPORT

HYDROLOGIC DATA

Date: August 24, 2004

DRAINAGE AREA : 670 sq. mi
CHARACTER OF TERRAIN : Hilly to Mountainous
STREAM CHARACTERISTICS : Sinuous, Alluvial, probably incised
NATURE OF STREAMBED : Gravel, Silty Sand, Ledge

PEAK FLOW DATA

Q 2.33 =	12,000 cfs	Q 50 =	33,500 cfs
Q 10 =	22,250 cfs	Q 100 =	39,300 cfs
Q 25 =	28,400 cfs	Q 500 =	55,500 cfs

DATE OF FLOOD OF RECORD : November 1927, per FEMA, FIS, Town of Moretown, 1984
ESTIMATED DISCHARGE: unknown
WATER SURFACE ELEV.: unknown
NATURAL STREAM VELOCITY : @ Q50 = 9.0 f/s
ICE CONDITIONS : Moderate
DEBRIS: Modetate
DOES THE STREAM REACH MAXIMUM HIGHWATER ELEV. RAPIDLY? Yes
IS ORDINARY RISE RAPID? Yes
IS STAGE AFFECTED BY UPSTREAM OR DOWNSTREAM CONDITIONS? No
IF YES, DESCRIBE:

WATERSHED STORAGE: 1% HEADWATERS:
UNIFORM: X
IMMEDIATELY ABOVE SITE:

EXISTING STRUCTURE INFORMATION

STRUCTURE TYPE: Two span steel truss bridge with additional approach span
YEAR BUILT: 1928
CLEAR SPAN(NORMAL TO STREAM): Span 1 = 47', Span 2 = 118', Span 3 = 118'
VERTICAL CLEARANCE ABOVE STREAMBED: 25.0' (low steel E.L. = 452.4')
WATERWAY OF FULL OPENING: 4,915 sf
DISPOSITION OF STRUCTURE: Removal of old structure
TYPE OF MATERIAL UNDER SUBSTRUCTURE: Abut. 1 Ledge, Abut. 2 Silty Sand

WATER SURFACE ELEVATIONS AT:

Q2.33 =	438.4'	VELOCITY =	7.6 f/s
Q10 =	442.4'	"	8.8 f/s
Q25 =	444.1'	"	9.0 f/s
Q50 =	445.8'	"	8.8 f/s
Q100 =	447.3'	"	8.8 f/s

LONG TERM STREAMBED CHANGES: F.I.S. show 5ft scour through bridge. Comparison of record plans to current conditions also show 5' of scour at pier.

IS THE ROADWAY OVERTOPPED BELOW Q100: No
FREQUENCY: N/A
RELIEF ELEVATION: 453.7'
DISCHARGE OVER ROAD @Q100: N/A

UPSTREAM STRUCTURE

TOWN: Moretown-Middlesex — DISTANCE: 7,700'
HIGHWAY # : VT 100B — STRUCTURE #: 8
CLEAR SPAN: 140' & 120' — CLEAR HEIGHT: 48' max
YEAR BUILT: 2001 — FULL WATERWAY: 4,200 sf
STRUCTURE TYPE: Two span continous welded plate curved girder

DOWNSTREAM STRUCTURE

TOWN: Waterbury-Duxbury — DISTANCE: 18,000'
HIGHWAY # : U.S. 2 — STRUCTURE #: 48
CLEAR SPAN: 105' & 120' — CLEAR HEIGHT: 23.5'
YEAR BUILT: 1992 — FULL WATERWAY: 4690 sf
STRUCTURE TYPE: 2 span plate girder

SERVICE II LOAD RATING

RATING FACTORS	HL-93	3S2	6 AXLE	3 AXLE	4 AXLE	5 AXLE	
INVENTORY	1.22	2.02	1.13	2.27	1.99	1.86	
OPERATING	1.58	2.61	1.46	2.94	2.58	2.41	

COMMENTS:

TRAFFIC DATA

YEAR	ADT	DHV	% D	% T	ADTT
2007	4200	580	62	2	190
2027	5500	730	62	2	200

20 year ESAL for flexible pavement from 2007 to 2027 : 1,874,000
40 year ESAL for flexible pavement from 2007 to 2047 : 4,530,000
Design Speed : 50 mph

PROPOSED STRUCTURE

STRUCTURE TYPE: Two span steel haunched girder bridge, concrete deck

CLEAR SPAN(NORMAL TO STREAM): Span 1 = 117.5', Span 2 = 117.5'
VERTICAL CLEARANCE ABOVE STREAMBED: 25.4' Average
WATERWAY OF FULL OPENING: 5015 sf

WATER SURFACE ELEVATIONS AT:

Q2.33 =	438.9'	VELOCITY=	7.2 f/s
Q10 =	442.9'	"	8.2 f/s
Q25 =	444.5'	"	8.6 f/s
Q50 =	445.9'	"	8.6 f/s
Q100 =	447.1'	"	8.9 f/s

IS THE ROADWAY OVERTOPPED BELOW Q100: No
FREQUENCY: N/A
RELIEF ELEVATION: 453.7'
DISCHARGE OVER ROAD @Q100: N/A

AVERAGE LOW ELEVATION OF SUPERSTRUCTURE: 450.9' Span 2
VERTICAL CLEARANCE: @ Q100 3.8' Average Span 2

SCOUR: Contraction scour 0' up to Q 500, Pier scour 5' @ Q500

REQUIRED CHANNEL PROTECTION: Type IV Stone Fill

PERMIT INFORMATION

AVERAGE DAILY FLOW:	1,410 cfs	DEPTH OR ELEVATION:
ORDINARY LOW WATER:	600 cfs	Elev. 428.0'
ORDINARY HIGH WATER:	5,150 cfs	Elev. 431.0'

TEMPORARY BRIDGE REQUIREMENTS

STRUCTURE TYPE: N/A
CLEAR SPAN (NORMAL TO STREAM): N/A
VERTICAL CLEARANCE ABOVE STREAMBED: N/A
WATERWAY AREA OF FULL OPENING: N/A

ADDITIONAL INFORMATION

DESIGN CRITERIA

1. DESIGN LIVE LOAD AASHTO HL-93
2. DESIGN SPAN 2 @ 140' EACH
3. NOMINAL BEARING RESISTANCE ON ROCK 11.25 KSF
4. NOMINAL AXIAL PILE RESISTANCE ABUTMENT #2, PIER 330 kips
   TYPE HP 14 X 117
   ESTIMATED LENGTH PIER 28'-6" (INCLUDING 1'-0" EMBEDMENT IN FOOTING)
   ESTIMATED LENGTH ABUTMENT #2 72'-6" (SAME AS ABOVE)
5. STRUCTURAL STEEL AASHTO M270M/M270 GRADE 50W
6. REINFORCING STEEL GRADE 60
7. SPECIAL PROVISION (HIGH PERFORMANCE
   CONCRETE, CLASS A LOW CEMENT A fc: 4000 psi
   CONCRETE, HIGH PERFORMANCE CLASS B fc: 3500 psi
   CONCRETE, CLASS C fc: 3000 psi
8. DESIGN SOIL UNIT WEIGHT 140 pcf
9. DESIGN LOAD FOR SPREAD FOOTINGS ON SOIL N/A

TRAFFIC MAINTENANCE

1. IS TRAFFIC TO BE MAINTAINED? YES
   IF YES, ON EXISTING STRUCTURE? YES-MABEY STRUCTURE IN PLACE
   OR ON TEMPORARY BRIDGE? NO
   ONE OR TWO-WAY TRAVEL? ONE-WAY
2. TRAFFIC CONTROL SIGNALS REQUIRED? YES-ALREADY IN PLACE
3. ARE SIDEWALKS REQUIRED? NO
   IF SO, ON WHAT SIDE? N/A

PROJECT NAME: **BRS 0284(14)**
PROJECT NUMBER: **MORETOWN-MIDDLESEX**

FILE NAME: 78f219/str/sf219pi.dgn — PLOT DATE: 4/27/2009
PROJECT MANAGER: M.EVANS-MONGEON — DRAWN BY: L. Duquette
DESIGNED BY: S. Scribner — CHECKED BY: S. Scribner
PRELIMINARY INFORMATION SHEET — SHEET 2 OF 103

US. RTE. 2
TYPICAL SECTIONS

MATERIAL ITEM	THICKNESS TOLERANCES
BITUMINOUS CONCRETE PAVEMENT (TOTAL DEPTH)	± 1/4 "
SUBBASE OF DENSE GRADED CRUSHED STONE	± 1"
SAND BORROW	± 1"
AGGREGATE SURFACE COURSE	± ½"

PG BINDER GRADE - SEE GENERAL SPECIAL PROVISIONS SECTION 406

1½" BITUMINOUS CONCRETE PAVEMENT, TYPE IV
1 1/2 " BITUMINOUS CONCRETE PAVEMENT, TYPE IV
2½" BITUMINOUS CONCRETE PAVEMENT, TYPE II
2½" BITUMINOUS CONCRETE PAVEMENT, TYPE II
24" SUBBASE OF DENSE GRADED CRUSHED STONE
12" SAND BORROW

TACK COAT: EMULSIFIED ASPHALT IS TO BE APPLIED AT THE RATE OF 0.025 GAL/SY BETWEEN SUCCESSIVE COURSES OF PAVEMENT AS DIRECTED BY THE ENGINEER.

SEEDING FORMULA
RURAL AREAS

% WT.	LBS./A.	NAME	PUR %	GERM %
37.5	22.5	CREEPING RED FESCUE	98	85
37.5	22.5	TALL FESCUE	95	90
5.0	3.0	RED TOP	95	90
15.0	9.0	BIRDSFOOT TREFOIL	98	85
5.0	3.0	ANNUAL RYEGRASS	95	85
100.0	60.0			

GENERAL NOTES

SEED MIXTURE: SHALL NOT HAVE A WEED CONTENT EXCEEDING 0.40% BY WEIGHT AND SHALL BE FREE OF ALL NOXIOUS SEED.

SEED: TO BE APPLIED PER SEEDING FORMULAS OR AS DIRECTED BY THE ENGINEER.

FERTILIZER: FORMULA 10-20-10, TO BE USED WITH SEED, APPLIED AT THE RATE OF 500 LBS./ACRE. (HYDRO SEEDERS MAY USE 19-19-19 FORMULA).

AGRICULTURAL LIMESTONE: TO BE APPLIED AT THE RATE OF 2 TONS/ACRE, OR AS DIRECTED BY THE ENGINEER.

HAY MULCH: TO BE PLACED ON EARTH SLOPES AT THE RATE OF 2 TONS/ACRE, OR AS DIRECTED BY THE ENGINEER.

TOPSOIL: TO BE USED WITH SEED AS INDICATED ON THE PLANS, OR AS DIRECTED BY THE ENGINEER.

MARKER POSTS: TO BE PLACED AS INDICATED OR AS DIRECTED BY THE ENGINEER.

SLOPE ROUNDING: ALL CUT SLOPES TO BE ROUNDED IN ACCORDANCE WITH STANDARD SHEET B - 5.

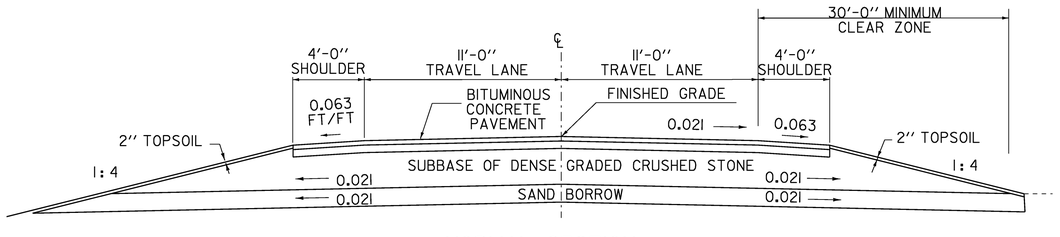

NORMAL SECTION

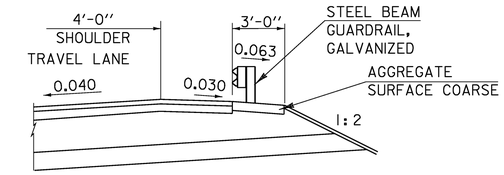

DETAIL OF RT 2 GUARD RAIL ON HIGH SIDE OF BANKED SECTION

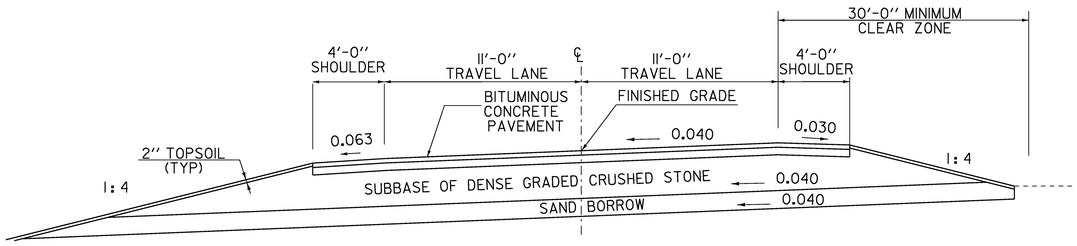

MAXIMUM BANKED SECTION 0.040 FT/FT

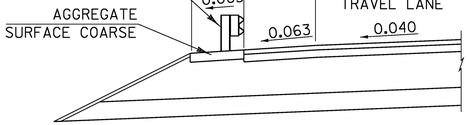

DETAIL OF RT 2 GUARD RAIL ON LOW SIDE OF BANKED SECTION

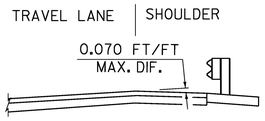

SHOULDER SLOPE BREAK HIGH SIDE OF BANKED SECTION

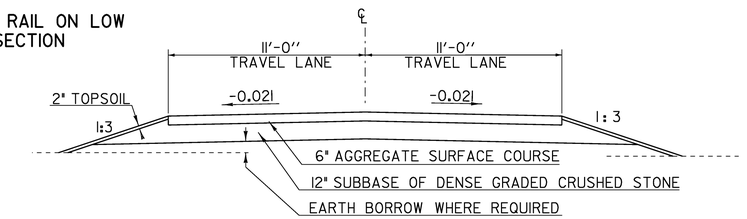

TH 9 NORMAL SECTION

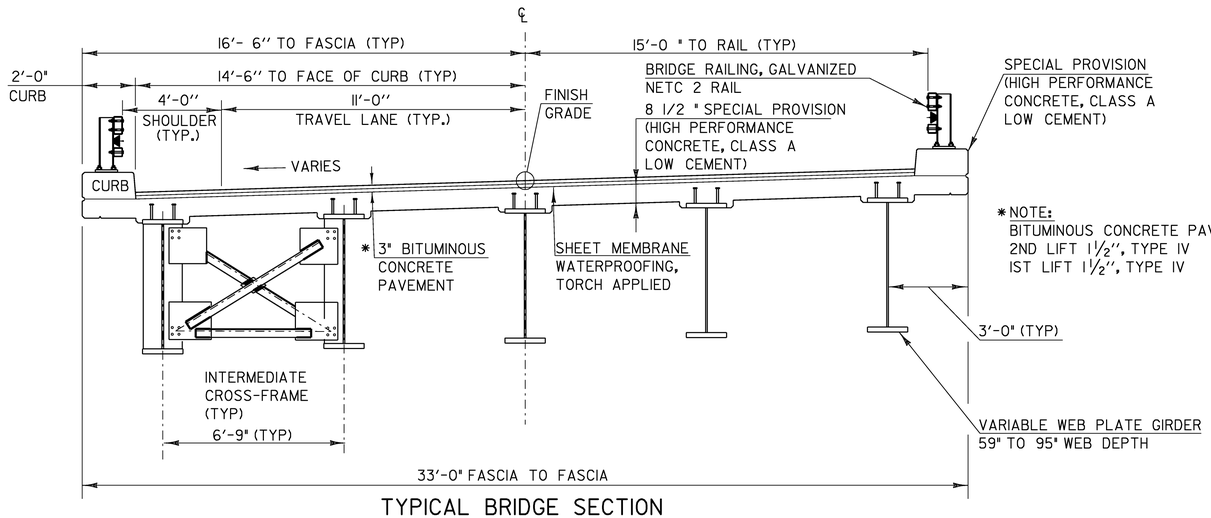

TYPICAL BRIDGE SECTION

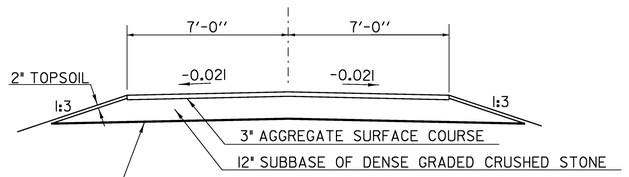

DRIVE NORMAL SECTION
STA. 263+00.00 LT & STA. 265+34.00 RT

GEOTEXTILE FOR ROADBED SEPARATOR
EXCAVATE ANY UNSUITABLE MATERIAL TO A MAX DEPTH OF 12" AND REPLACE WITH SUBBASE OF DENSE GRADED CRUSHED STONE

NOT TO SCALE

TYPICAL SECTIONS SHEET 1

PROJECT NAME:	MORETOWN-MIDDLESEX
PROJECT NUMBER:	BRS 0284(14)

FILE NAME: /78f219/str2/sf219frm.dgn	PLOT DATE: 15-JUN-2009
PROJECT LEADER: EVANS-MONGEON	DRAWN BY: L. DUQUETTE
DESIGNED BY: S. SCRIBNER	CHECKED BY: S. SCRIBNER
IPARM: s78f219typ.1	SHEET 3 OF 103

STATE GARAGE DRIVE
TYPICAL SECTIONS

MATERIAL ITEM	THICKNESS TOLERANCES
BITUMINOUS CONCRETE PAVEMENT (TOTAL DEPTH)	± 1/4 "
SUBBASE OF DENSE GRADED CRUSHED STONE	± 1"

* 1½" BITUMINOUS CONCRETE PAVEMENT, TYPE IV
* 1½" BITUMINOUS CONCRETE PAVEMENT, TYPE IV

18" SUBBASE OF DENSE GRADED CRUSHED STONE

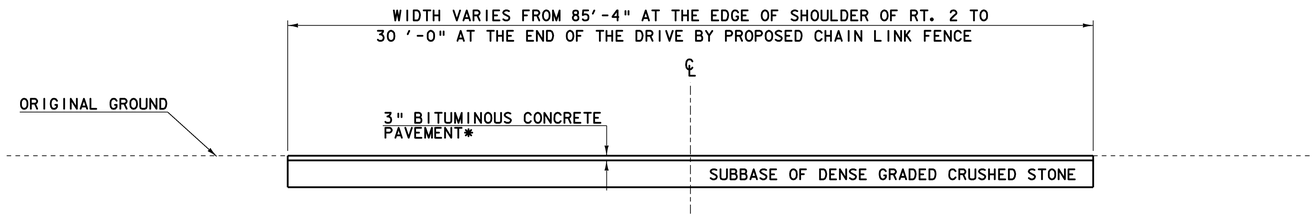

DRIVE @ 272+76.96 (LEFT)

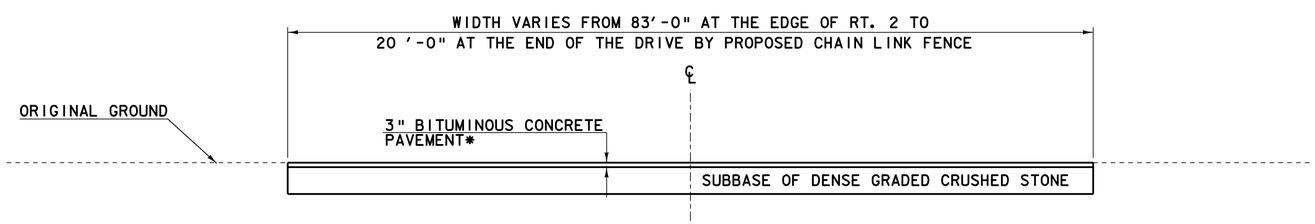

DRIVE @ 273+75.00 (LEFT)

NOT TO SCALE

TYPICAL SECTIONS SHEET 2

PROJECT NAME:	MORETOWN-MIDDLESEX
PROJECT NUMBER:	BRS 0284(14)

FILE NAME: /78f219/str2/sf219frm.dgn	PLOT DATE: 15-JUN-2009
PROJECT LEADER: EVANS-MONGEON	DRAWN BY: L.DUQUETTE
DESIGNED BY: S. SCRIBNER	CHECKED BY: S. SCRIBNER
IPARM: s78f219typ.1	SHEET 4 OF 103

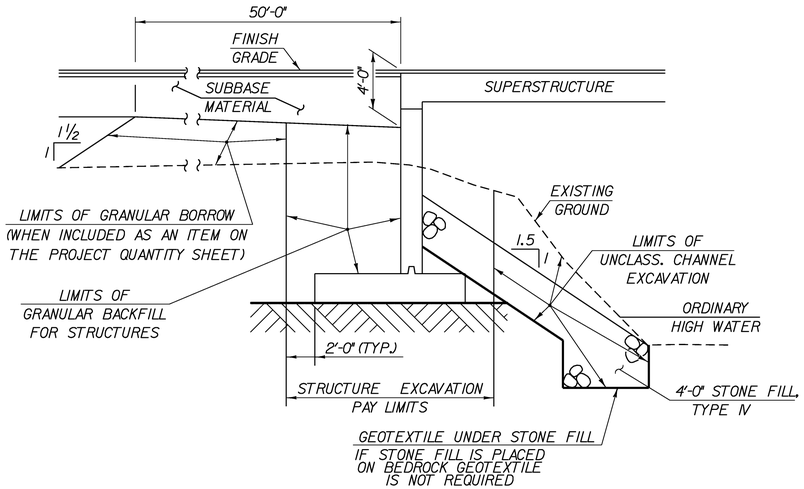

ABUTMENT 1 SECTION

(NOT TO SCALE)

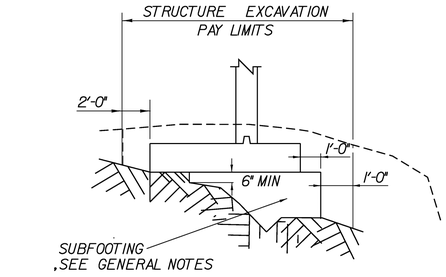

ABUTMENT 1,WING WALL 1&2 SUBFOOTING TYPICAL DETAIL

(NOT TO SCALE)

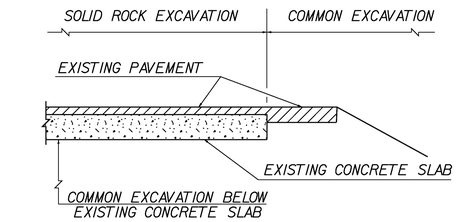

EXISTING CONCRETE SLAB TYPICAL LIMITS

(NOT TO SCALE)

NOTES

1. COFFERDAM LIMITS TO BE DETERMINED BY THE CONTRACTOR.
2. THE PAY LIMITS OF "COFFERDAM EXCAVATION, EARTH" AND "COFFERDAM EXCAVATION, ROCK" SHALL BE NO MORE THAN 2'-0" OUTSIDE THE PERIMETER OF THE FOOTING, UP TO EXISTING GROUND OR BOTTOM OF SUBBASE, WHICHEVER IS LOWER.
3. ONE FOOT UNDERCUT AS DETERMINED NECESSARY BY THE RESIDENT ENGINEER.
4. IF A COFFERDAM IS CONSTRUCTED WHICH IS LARGER THAN THE INDICATED COFFERDAM EXCAVATION PAY LIMITS, PAYMENT FOR ALL UNCLASSIFIED CHANNEL EXCAVATION, INCLUDING THAT PORTION WHICH IS INSIDE THE COFFERDAM BUT OUTSIDE THE COFFERDAM EXCAVATION PAY LIMITS, WILL BE MADE AT THE CONTRACT UNIT PRICE FOR UNCLASSIFIED CHANNEL EXCAVATION.
5. ANY BEDROCK THAT IS ENCOUNTERED WITHIN THE STRUCTURE EXCAVATION LIMITS AT ABUTMENT 1, WINGWALL 1, AND WINGWALL 2 WILL BE REMOVED AND PAID UNDER ITEM 204.25 STRUCTURE EXCAVATION.

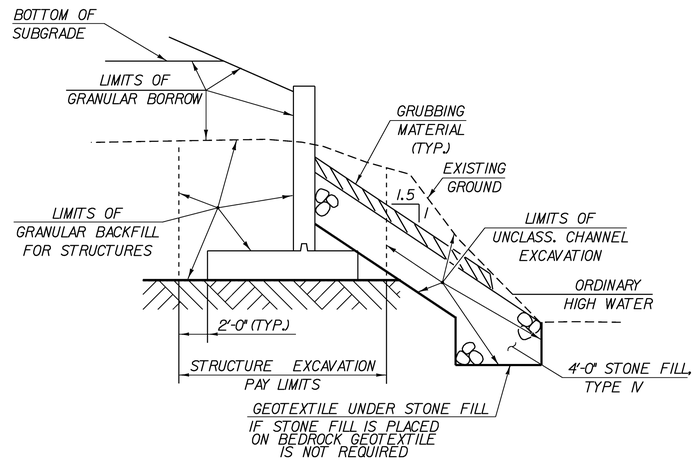

TYPICAL WINGWALL 1& 2 SECTION

(NOT TO SCALE)

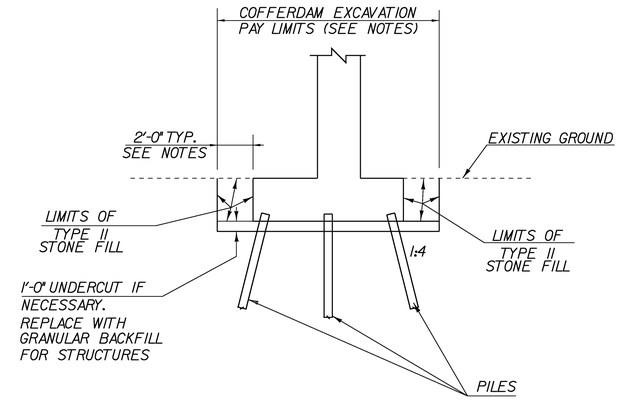

PIER EARTHWORK SECTION

(NOT TO SCALE)

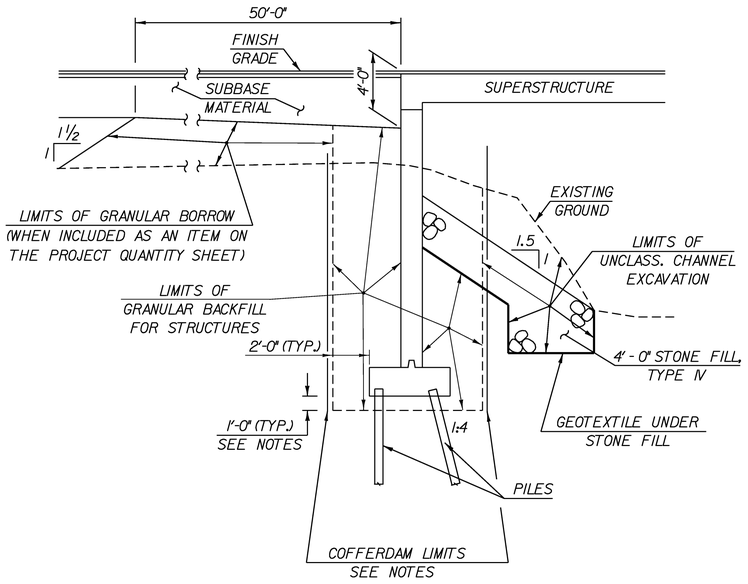

ABUTMENT 2 SECTION

(NOT TO SCALE)

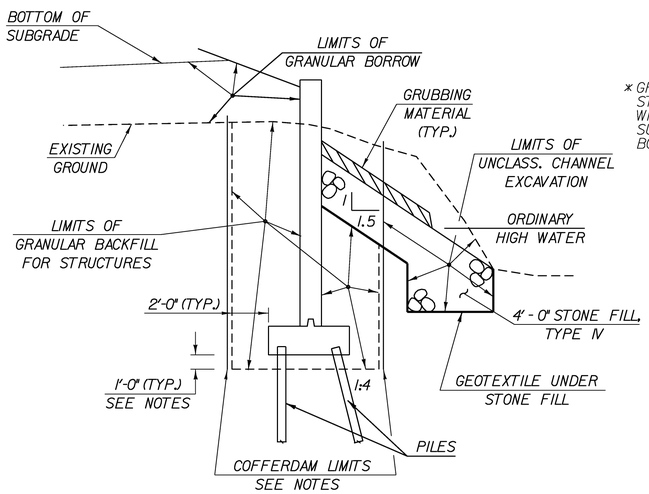

TYPICAL WINGWALL SECTION 3&4

(NOT TO SCALE)

* GRUBBING MATERIAL SHALL NOT BE PLACED ON THE STONE FILL IN THE AREA UNDER THE BRIDGE. WHENEVER CHANNEL SLOPE INTERSECTS ROADWAY SUBBASE, GRUBBING MATERIAL SHALL BEGIN AT THE BOTTOM OF SUBBASE.

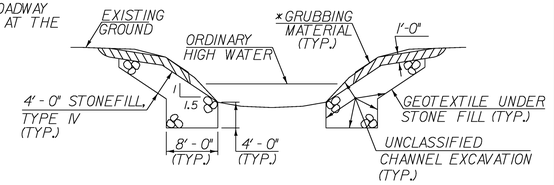

TYPICAL CHANNEL SECTION

(NOT TO SCALE)

TYPICAL SECTIONS SHEET 3

PROJECT NAME:	MORETOWN-MIDDLESEX
PROJECT NUMBER:	BRS 0284(14)

FILE NAME: /78f219/str/sf219frm.dgn	PLOT DATE: 15-JUN-2009
PROJECT LEADER: M. EVANS-MONGEON	DRAWN BY: L. DUQUETTE
DESIGNED BY: S. SCRIBNER	CHECKED BY: S. SCRIBNER
IPARM: s78f219typ2.1	SHEET 5 OF 103

STATE OF VERMONT
AGENCY OF TRANSPORTATION

QUANTITY SHEET 1

SUMMARY OF ESTIMATED QUANTITIES

ROADWAY	TRAINING	LANDSCAPING	EROSION CONTROL	BRIDGE	FULL C. E. ITEMS	GRAND TOTAL	FINAL	UNIT	ITEMS	ITEM NUMBER	ROUND
1						1		LS	CLEARING AND GRUBBING, INCLUDING INDIVIDUAL TREES AND STUMPS	201.10	
5430						5430		CY	COMMON EXCAVATION	203.15	
650						650		CY	SOLID ROCK EXCAVATION	203.16	
				2449		2449		CY	UNCLASSIFIED CHANNEL EXCAVATION	203.27	
3491						3491		CY	EARTH BORROW	203.30	
1826						1826		CY	SAND BORROW	203.31	
				1298		1298		CY	GRANULAR BORROW	203.32	
240						240		CY	TRENCH EXCAVATION OF EARTH	204.20	
5						5		CY	TRENCH EXCAVATION OF ROCK	204.21	
1						1		CY	TRENCH EXCAVATION OF EARTH, EXPLORATORY (N.A.B.I.)	204.22	
				410		410		CY	STRUCTURE EXCAVATION	204.25	
50				700		750		CY	GRANULAR BACKFILL FOR STRUCTURES	204.30	
				550		550		CY	COFFERDAM EXCAVATION, EARTH	208.30	
				140		140		CY	COFFERDAM EXCAVATION, ROCK	208.35	
				1		1		LS	COFFERDAM (STA. 270+30)	208.40	
				1		1		LS	COFFERDAM (STA. 271+70)	208.40	
334						334		SY	COLD PLANING, BITUMINOUS PAVEMENT	210.10	
4410						4410		CY	SUBBASE OF DENSE GRADED CRUSHED STONE	301.35	
185						185		CY	AGGREGATE SURFACE COURSE	401.10	
34						34		CWT	EMULSIFIED ASPHALT	404.65	
1672				152		1824		TON	BITUMINOUS CONCRETE PAVEMENT	406.25	
1						1		LU	PRICE ADJUSTMENT, ASPHALT CEMENT (N.A.B.I.)	406.50	
				678		678		CY	CONCRETE, HIGH PERFORMANCE CLASS B	501.34	
				1		1		LS	FURNISHING EQUIPMENT FOR DRIVING PILING	504.10	
				3140		3140		LF	STEEL PILING, HP 14 X 117	505.20	
				2		2		EACH	DYNAMIC PILE LOADING TEST	505.45	
				428650		428650		LB	STRUCTURAL STEEL, PLATE GIRDER	506.55	
				770		770		LB	STRUCTURAL STEEL	506.60	
				92470		92470		LB	REINFORCING STEEL	507.15	
				102		102		LF	DRILLING AND GROUTING DOWELS	507.16	
				74605		74605		LB	EPOXY COATED REINFORCING STEEL	507.17	
				1		1		LS	SHEAR CONNECTORS (2810 - 7/8" X 7")	508.15	
				1		1		LS	STRUCTURAL PAINTING, SHOP APPLIED	513.25	
				1		1		LS	SURFACE PREPARATION, SHOP	513.40	
				45		45		GAL	WATER REPELLENT, SILANE	514.10	
				76		76		LF	BRIDGE EXPANSION JOINT, VERMONT	516.11	
				940		940		SY	SHEET MEMBRANE WATERPROOFING, TORCH APPLIED	519.20	
				650		650		LF	BRIDGE RAILING, GALVANIZED NETC 2 RAIL	525.33	
				1		1		LS	MAINTENANCE OF STRUCTURES AND APPROACHES	527.10	
				1		1		EACH	REMOVAL OF STRUCTURE (3600 SF - EST.)	529.15	

DETAILED SUMMARY OF QUANTITIES

QUANTITIES	UNIT	ITEMS
		EARTHWORKS SUMMARY
		FILL REQUIRED
		FILL AVAILABLE
970	CY	COMMON EXCAVATION: 970 x 1.0
1469	CY	UNCLASSIFIED CHANNEL EXCAVATION: 2449 x 0.6
246	CY	STRUCTURE EXCAVATION 410 x 0.6
240	CY	TRENCH EXCAVATION EARTH : 240 x 1.0
138	CY	COFFERDAM EXCAVATION EARTH: 550 x 0.25
488	CY	SOLID ROCK EXCAVATION: 650 x .75
3551	CY	SUBTOTAL
4	CY	ROUNDING
3555	CY	TOTAL
3555	CY	FILL AVAILABLE
7046	CY	FILL REQUIRED
3491	CY	BORROW
		COMMON EXCAVATION
4993	CY	MAINLINE
435	CY	TH9
2	CY	ROUNDING
4460	CY	UNAVAILABLE DUE TO TRAFFIC STAGING
970	CY	TOTAL
		SUBBASE OF DENSE GRADED CRUSHED STONE
3465	CY	MAINLINE
600	CY	TH9
345	CY	DRIVES
4410	CY	TOTAL
		BITUMINOUS CONCRETE PAVEMENT
		MAINLINE
995.0	TONS	TYPE II BASE
323.6	TONS	TYPE IV BINDER
337.4	TONS	TYPE IV TOP
8.0	TONS	TYPE IV TH 9 APRON
8.0	TONS	TYPE IV TH 9 APRON
1672.0	TONS	MAINLINE TOTAL
		DRIVES
15.0	SY	STA. 263+00.00 LT
21.0	SY	STA. 265+34.00 RT
173.0	SY	STA. 272+76.96 LT
101.0	SY	STA. 273+75.00 LT
310.0	SY	TOTAL DRIVES
		BRIDGE
75.7	TONS	TYPE IV BINDER
75.7	TONS	TYPE IV TOP
152.0	TONS	BRIDGE TOTAL
1824.0	TONS	TOTAL

PROJECT NAME: MORETOWN-MIDDLESEX
PROJECT NUMBER: BRS 0284(14)

FILE NAME: structures/78f219/sf219pi.dgn
PROJECT LEADER: M. EVANS-MONGEON
DESIGNED BY: S. SCRIBNER
QUANTITY SHEET #1

PLOT DATE: 06/15/2009
DRAWN BY: L. DUQUETTE
CHECKED BY: S. SCRIBNER
SHEET 6 OF 103

STATE OF VERMONT
AGENCY OF TRANSPORTATION

QUANTITY SHEET 2

SUMMARY OF ESTIMATED QUANTITIES									TOTALS		DESCRIPTIONS				DETAILED SUMMARY OF QUANTITIES		
				ROADWAY	TRAINING	LANDSCAPING	EROSION CONTROL	BRIDGE	FULL C. E. ITEMS	GRAND TOTAL	FINAL	UNIT	ITEMS	ITEM NUMBER	ROUND	QUANTITIES	UNIT	ITEMS
								15		15		EACH	BEARING DEVICE ASSEMBLY, ELASTOMERIC PAD	531.11				
								90		90		CY	CONCRETE, CLASS C	541.30				
													BEGIN OPTION AA					
				183						183		LF	18" CAAP .105 (2-2/3 X 1/2)	601.0217				
				183						183		LF	18" PCCSP .079 (2-2/3 X 1/2)	601.0416				
				183						183		LF	18" CPEP	601.0915				
													END OPTION AA					
													BEGIN OPTION BB					
				3						3		EACH	18" CSPES .064 (2-2/3 X 1/2)	601.6015				
				3						3		EACH	18" CAAPES .060 (2-2/3 X 1/2)	601.6215				
				3						3		EACH	18" CPEPES	601.7015				
													END OPTION BB					
				1						1		EACH	PRECAST REINFORCED CONCRETE PIPE DI WITH CAST IRON GRATE	604.25				
				10						10		HR	ALL PURPOSE EXCAVATOR RENTAL, TYPE I	608.25				
				1						1		MGAL	DUST CONTROL WITH WATER	609.10				
							15			15		CY	STONE FILL, TYPE I	613.10				
								42		42		CY	STONE FILL, TYPE II	613.11				
								1500		1500		CY	STONE FILL, TYPE IV	613.13				
				160						160		LF	CAST-IN-PLACE CONCRETE CURB, TYPE B	616.28				
				1						1		EACH	RELOCATE MAILBOX, SINGLE SUPPORT	617.10				
				4						4		EACH	STEEL MARKER POSTS	619.16				
				285						285		LF	CHAIN-LINK FENCE, 6 FEET	620.12				
				50						50		LF	GATE FOR CHAIN-LINK FENCE, 6 FEET	620.16				
				11						11		EACH	BRACING ASSEMBLY FOR CHAIN-LINK FENCE, 6 FEET	620.21				
				320						320		LF	REMOVAL OF EXISTING FENCE	620.55				
				362.5						362.5		LF	STEEL BEAM GUARDRAIL, GALVANIZED	621.20				
				4						4		EACH	ANCHOR FOR STEEL BEAM RAIL	621.60				
				4						4		EACH	GUARDRAIL APPROACH SECTION, GALVANIZED NETC 2 RAIL	621.72				
				301						301		LF	REMOVAL AND DISPOSAL OF GUARDRAIL	621.80				
									1	1		LS	FIELD OFFICE, ENGINEERS	631.10				
									1	1		LS	TESTING EQUIPMENT, CONCRETE	631.16				
									1	1		LS	TESTING EQUIPMENT, BITUMINOUS	631.17				
									1	1		LU	FIELD OFFICE TELEPHONE (N.A.B.I.)	631.25				
					520					520		HR	EMPLOYEE TRAINEESHIP	634.10				
				1						1		LS	MOBILIZATION/DEMOBILIZATION	635.11				
				3000						3000		LF	4 INCH WHITE LINE	646.20				
				3000						3000		LF	4 INCH YELLOW LINE	646.21				
				14						14		LF	DURABLE 24 INCH STOP BAR	646.480				
				567						567		SY	GEOTEXTILE FOR ROADBED SEPARATOR	649.11				
								1575		1575		SY	GEOTEXTILE UNDER STONE FILL	649.31				

PROJECT NAME: MORETOWN-MIDDLESEX
PROJECT NUMBER: BRS 0284(14)

FILE NAME: structures/78f219/sf219pi.dgn
PROJECT LEADER: M. EVANS-MONGEON
DESIGNED BY: S. SCRIBNER
QUANTITY SHEET #2

PLOT DATE: 06/15/2009
DRAWN BY: L. DUQUETTE
CHECKED BY: S. SCRIBNER
SHEET 7 OF 103

STATE OF VERMONT
AGENCY OF TRANSPORTATION

QUANTITY SHEET 3

SUMMARY OF ESTIMATED QUANTITIES									TOTALS		DESCRIPTIONS				DETAILED SUMMARY OF QUANTITIES		
				ROADWAY	TRAINING	LANDSCAPING	EROSION CONTROL	BRIDGE	FULL C. E. ITEMS	GRAND TOTAL	FINAL	UNIT	ITEMS	ITEM NUMBER	ROUND	QUANTITIES	UNIT	ITEMS
							1146			1146		SY	GEOTEXTILE FOR SILT FENCE	649.51				
							314			314		SY	GEOTEXTILE FOR SILT FENCE, WOVEN WIRE REINFORCED	649.515				
							680			680		SY	GEOTEXTILE FOR FILTER CURTAIN	649.61				
							125			125		LB	SEED	651.15				
							25			25		LB	SEED, WINTER RYE	651.17				
							1000			1000		LB	FERTILIZER	651.18				
							4			4		TON	AGRICULTURAL LIMESTONE	651.20				
							4			4		TON	HAYMULCH	651.25				
							540			540		CY	TOPSOIL	651.35				
							947			947		SY	GRUBBING MATERIAL	651.40				
							1			1		LS	EPSC PLAN	652.10				
							200			200		HR	MONITORING EPSC PLAN	652.20				
							1			1		LU	MAINTENANCE OF EPSC PLAN (N.A.B.I.)	652.30				
							1750			1750		SY	TEMPORARY EROSION MATTING	653.20				
							60			60		CY	VEHICLE TRACKING PAD	653.35				
							1			1		EACH	INLET PROTECTION DEVICE, TYPE I	653.40				
							400			400		LF	BARRIER FENCE	653.50				
							2150			2150		LF	PROJECT DEMARCATION FENCE	653.55				
						9				9		EACH	EVERGREEN TREES (PINUS STROBUS)(B & B)(5'-6' HT.)	656.20				
						106				106		CY	LANDSCAPE BACKFILL, TRUCK MEASUREMENT	656.80				
				49.51						49.51		SF	TRAFFIC SIGNS, TYPE A	675.20				
				105						105		LF	SQUARE TUBE SIGN POST AND ANCHOR	675.341				
				21						21		EACH	REMOVING SIGNS	675.50				
				1						1		EACH	ERECTING SALVAGED SIGNS	675.60				
				9						9		EACH	DELINEATOR WITH STEEL POST	676.10				
				1						1		LU	PRICE ADJUSTMENT, FUEL (N.A.B.I.)	690.50				
				20						20		CY	SPECIAL PROVISION (CONTROLLED DENSITY (FLOWABLE) FILL)	900.608				
								342		342		CY	SPECIAL PROVISION (HIGH PERFORMANCE CONCRETE, CLASS A LOW CEMENT)	900.608				
								104		104		CY	SPECIAL PROVISION (HIGH PERFORMANCE CONCRETE, MASS POUR)	900.608				
				1						1		LS	SPECIAL PROVISION (TRAFFIC CONTROL, ALL- INCLUSIVE)	900.645				
				310						310		SY	SPECIAL PROVISION (HAND-PLACED BITUMINOUS CONCRETE MATERIAL, DRIVES)	900.675				

PROJECT NAME: MORETOWN-MIDDLESEX
PROJECT NUMBER: BRS 0284(14)

FILE NAME: structures/78f219/sf219pi.dgn
PROJECT LEADER: M. EVANS-MONGEON
DESIGNED BY: S. SCRIBNER
QUANTITY SHEET #3

PLOT DATE: 06/15/2009
DRAWN BY: L. DUQUETTE
CHECKED BY: S. SCRIBNER

STATE OF VERMONT
AGENCY OF TRANSPORTATION

BRIDGE QUANTITY SHEET 1

SUMMARY OF BRIDGE QUANTITIES							TOTALS	DESCRIPTIONS				DETAILED SUMMARY OF QUANTITIES		
PIER	ABUT.1	ABUT.2	SUPER-STRUCTURE	APP. SLAB 1	APP. SLAB 2	BRIDGE TOTAL	UNIT	ITEMS	ITEM NUMBER		QUANTITIES	UNIT	ITEMS
	1429	1020				2449	CY	UNCLASSIFIED CHANNEL EXCAVATION	203.27				
	1183	115				1298	CY	GRANULAR BORROW	203.32				
	410					410	CY	STRUCTURE EXCAVATION	204.25				
	465	235				700	CY	GRANULAR BACKFILL FOR STRUCTURES	204.30				
130		420				550	CY	COFFERDAM EXCAVATION, EARTH	208.30				
45		95				140	CY	COFFERDAM EXCAVATION, ROCK	208.35				
1						1	LS	COFFERDAM (STA. 270+30)	208.40				
		1				1	LS	COFFERDAM (STA. 271+70)	208.40				
			152			152	TON	BITUMINOUS CONCRETE PAVEMENT	406.25				
109	255	242		36	36	678	CY	CONCRETE, HIGH PERFORMANCE CLASS B	501.34				
0.5		0.5				1	LS	FURNISHING EQUIPMENT FOR DRIVING PILING	504.10				
2150		990				3140	LF	STEEL PILING, HP 14 X 117	505.20				
1		1				2	EACH	DYNAMIC PILE LOADING TEST	505.45				
			428650			428650	LB	STRUCTURAL STEEL, PLATE GIRDER	506.55				
378	196	196				770	LB	STRUCTURAL STEEL	506.60				
36203	28292	27975				92470	LB	REINFORCING STEEL	507.15				
	102					102	LF	DRILLING AND GROUTING DOWELS	507.16				
			66291	4157	4157	74605	LB	EPOXY COATED REINFORCING STEEL	507.17				
			1			1	LS	SHEAR CONNECTORS (2810 - 7/8" X 7")	508.15				
			1			1	LS	STRUCTURAL PAINTING, SHOP APPLIED	513.25				
			1			1	LS	SURFACE PREPARATION, SHOP	513.40				
10	8	8	19			45	GAL	WATER REPELLENT, SILANE	514.10				
	38	38				76	LF	BRIDGE EXPANSION JOINT, VERMONT	516.11				
			940			940	SY	SHEET MEMBRANE WATERPROOFING, TORCH APPLIED	519.20				
			650			650	LF	BRIDGE RAILING, GALVANIZED NETC 2 RAIL	525.33				
			1			1	LS	MAINTENANCE OF STRUCTURES AND APPROACHES	527.10				
			1			1	EACH	REMOVAL OF STRUCTURE (3600 SF - EST.)	529.15				
5	5	5				15	EACH	BEARING DEVICE ASSEMBLY, ELASTOMERIC PAD	531.11				
	90					90	CY	CONCRETE, CLASS C	541.30				
42						42	CY	STONE FILL, TYPE II	613.11				
	756	744				1500	CY	STONE FILL, TYPE IV	613.13				
	786	789				1575	SY	GEOTEXTILE UNDER STONE FILL	649.31				
	1	1	340			342	CY	SPECIAL PROVISION (HIGH PERFORMANCE CONCRETE, CLASS A LOW CEMENT)	900.608				
104						104	CY	SPECIAL PROVISION (HIGH PERFORMANCE CONCRETE, MASS POUR)	900.608				

PROJECT NAME: MORETOWN-MIDDLESEX
PROJECT NUMBER: BRS 0284(14)

FILE NAME: structures/78f219/sf219pi.dgn
PROJECT LEADER: M. EVANS-MONGEON
DESIGNED BY: S. SCRIBNER
BRIDGE QUANTITY SHEET #1

PLOT DATE: 06/15/2009
DRAWN BY: L. DUQUETTE
CHECKED BY: S. SCRIBNER
SHEET 9 OF 103

GPS CONTROL POINTS

HVCTRL #1

STANDARD DISK STAMPED

Laskey

N = 653522.44
E = 1590034.23
ELEV. =

TO REACH FROM THE JUNCTION OF US ROUTE 2 + VT ROUTE 100B IN MIDDLESEX VILLAGE PROCEED SOUTHWESTERLY ALONG ROUTE 100B FOR 0.6 MI (1.0 KM) TO A DRIVEWAY SOUTH, THENCE SOUTH ALONG SAID DRIVE FOR 0.1 MI (0.2 KM) TO THE HOUSE OF DAVID LASKEY AND SITE OF MARK WSW OF THE HOUSE. OWNERSHIP, DAVID LASKEY STATION MARK, STATE OF VERMONT SURVEY MARK DISK IN THE TOP OF A 30CM DIAMETER CONCRETE MONUMENT FLUSH WITH GROUND SURFACE. IT IS 69.60 FT (21.21 M) MAG AZ 245-30 FROM NW CORNER OF LASKEY HOUSE, 155.10 FT (47.27 M) MAG AZ 41-41 FROM A COMBO POLE (NO NUMBER) , 45.90 FT (13.99 M) MAG AZ 119-51 FROM AN ARTESIAN WELL, AND WITNESSED BY A CARSONITE WITNESS POST.

HVCTRL #2

STANDARD DISK STAMPED

Westover

N = 655416.06
E = 1591067.44
ELEV. = 561.29

TO REACH, FROM THE JUNCTION OF U.S. ROUTE 2 AND VT ROUTE 100B SOUTH, PROCEED WESTERLY ON U.S. ROUTE 2 FOR 0.6 MI (1.0 KM) TO THE MARK ON THE SOUTH SIDE OF U.S. ROUTE 2. IT IS 28.2 FT (8.6 M) MAG AZ 238-21 FROM THE CENTERLINE OF U.S. ROUTE 2, 102.5 FT (31.2 M) MAG AZ 336-40 FROM A COMBO POLE (NO NUMBER) , 69.20 FT (21.09 M) MAG AZ 129-13 FROM A 6-INCH WHITE BIRCH, 172.7 FT (52.6 M) MAG AZ 147-18 FROM COMBO POLE NO.23/22/1A, AND WITNESSED BY A CARSONITE WITNESS POST.

- DESCRIPTION PROVIDED BY VERMONT AGENCY OF TRANSPORTATION GEODETIC SURVEY UNIT
- TO ALLOW THE STATE PLANE COORDINATES TO FIT THE AGENCY DESIGN PLANE, SUBTRACT 600,000 FROM THE NORTHING AND SUBTRACT 1,500,000 FROM THE EASTING

TRAVERSE TIES

HVCTRL #4

NORTH = 56989.36
EAST = 89554.66
ELEV. = 454.07

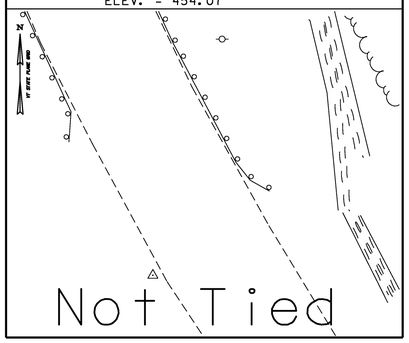

HVCTRL #5

NORTH = 58299.12
EAST = 89264.13
ELEV. = 455.66

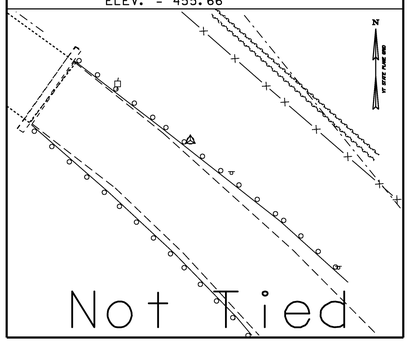

HVCTRL #6

NORTH = 58562.01
EAST = 88881.26
ELEV. = 456.50

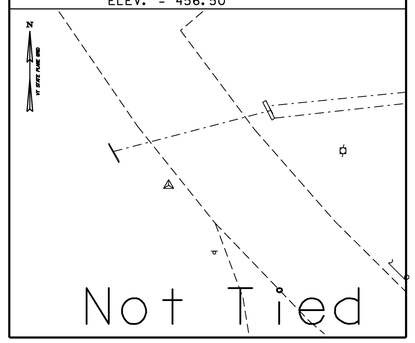

HVCTRL #7

NORTH = 59582.78
EAST = 88746.54
ELEV. = 457.90

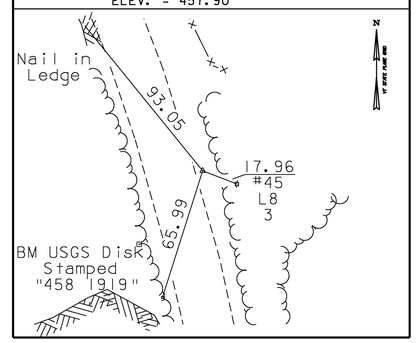

HVCTRL #8

NORTH = 58775.56
EAST = 88782.81
ELEV. = 458.69

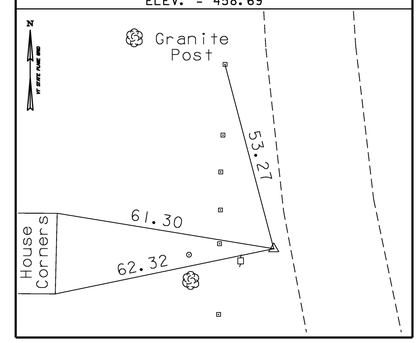

- MAIN TRAVERSE COMPLETED 09/04/91 by R. Moreau P.C. & L. Orvis & R. Bullock &

TRAVERSE TIES

HVCTRL #9

NORTH = 58482.34
EAST = 88968.86
ELEV. = 457.48

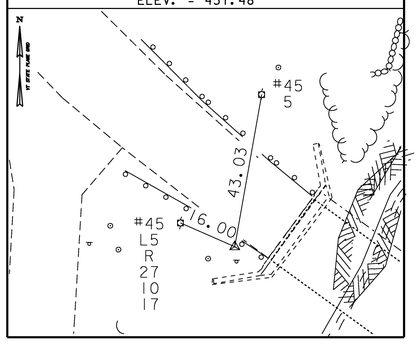

HVCTRL #10

NORTH = 58218.26
EAST = 89299.90
ELEV. = 451.97

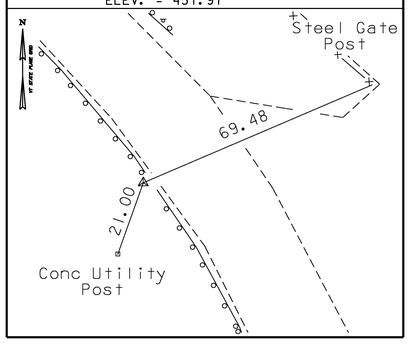

HVCTRL #11

NORTH = 57758.61
EAST = 89362.17
ELEV. = 457.47

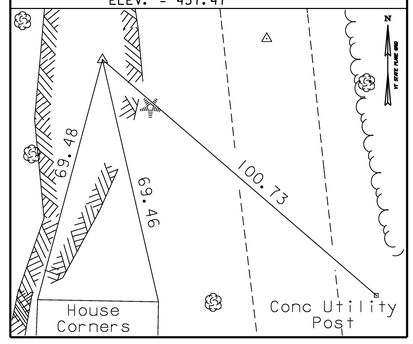

HVCTRL #12

NORTH = 57487.05
EAST = 89426.03
ELEV. = 454.71

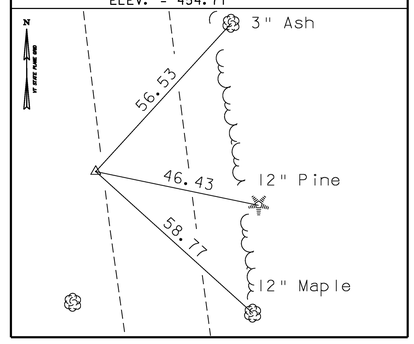

HVCTRL #13

NORTH = 56929.98
EAST = 89596.42
ELEV. = 455.43

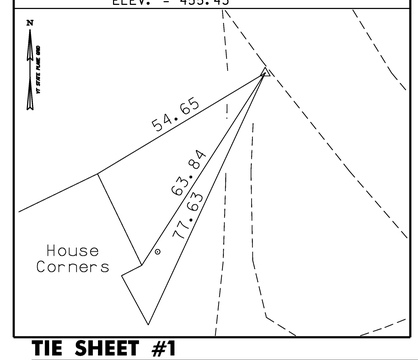

DATUM

VERTICAL	NAVD 83
HORIZONTAL	NAD 88
ADJUSTMENT	Compass

TIE SHEET #1

PROJECT NAME: Moretown - Middlesex
PROJECT NUMBER: BRS 0284 (14)

FILE NAME: 78f219/survey/xf219t1.dgn
PROJECT LEADER: M. Evans-Mongeon
DESIGNED BY: M. EVANS-MONGEON

PLOT DATE: 15-JUN-2009
DRAWN BY: R. Bullock
CHECKED BY: L. RUSSEL

ALIGNMENT TIES

POB 260+92.44

NORTH = 59316.55
EAST = 88769.80

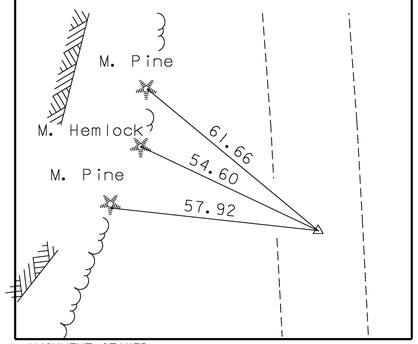

PC 263+42.84

NORTH = 59066.32
EAST = 88778.79

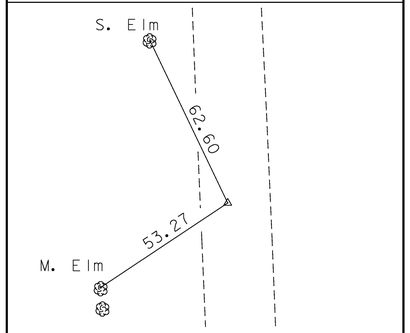

PT 268+37.45

NORTH = 58626.83
EAST = 88977.37

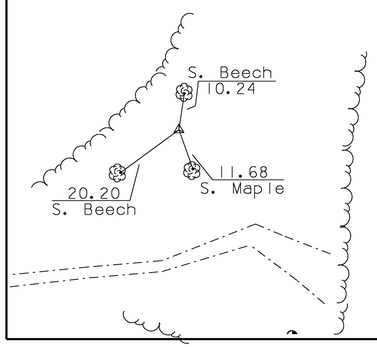

PC 271+80.03

NORTH = 58391.33
EAST = 89226.17

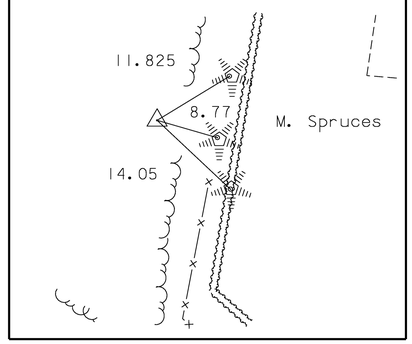

PT 275+17.32

NORTH = 58095.29
EAST = 89372.71

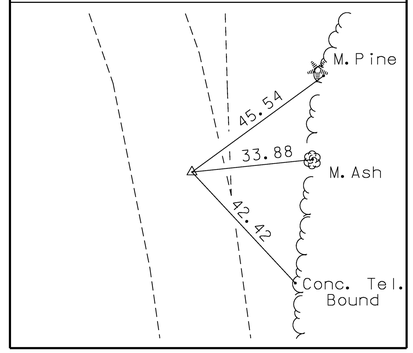

• ALIGNMENT STAKED 06/06/03 by J. Hulett & P. Winters & A. Somaini

ALIGNMENT TIES

POE 278+50.01

NORTH = 57764.49
EAST = 89408.05

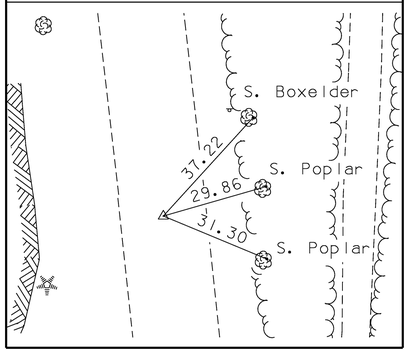

NORTH =
EAST =

NORTH =
EAST =

NORTH =
EAST =

NORTH =
EAST =

DATUM

VERTICAL NAVD 83
HORIZONTAL NAD 88
ADJUSTMENT Compass

TIE SHEET #2

PROJECT NAME: Moretown - Middlesex
PROJECT NUMBER: BRS 0284 (14)

FILE NAME: 78f219/survey/xf219t1.dgn
PROJECT LEADER: M. EVANS-MONGEON
DESIGNED BY: M. EVANS-MONGEON

PLOT DATE: 15-JUN-2009
DRAWN BY: R. Bullock
CHECKED BY: L. RUSSEL
SHEET 11 OF 103

STA. 261+00.00
BEGIN APPROACH

STA. 262+25.00
BEGIN PROJECT

EXISTING RIGHT OF WAY

US RT. 2
TO WATERBURY

261+00

262+00

263+00

264+00

265+00

266+00

267+00

S2°03'26.72"E

16' R
(TYP.)

14' 0"

PI Sta 263+42.84

US. ROUTE 2 CURVE #1 DATA

△ = 44°30'56"
D = 9°00'00"
R = 636.62'
T = 260.55'
L = 494.62'
E = 51.25'
BANK = 0.040

N
VT STATE PLANE GRID

ML STA. 265+34.00
DRIVE STA. 66+50.00
AT 90° TO CURVE

ML STA. 266+75.00
TH 9 STA. 106+50.00
AT 90° TO CURVE

MATCH LINE STA. 267+00

US RT. 2
TO MONTPELIER

N58°02'51"E 86.90'

106+00

TH-9

30' R
(TYP.)

31' R

CONSTRUCTION
LIMIT (TYP)

CONSTRUCT BITUMINOUS CONCRETE PAVEMENT APRON
TH 9 266+75.00 RT LENGTH 15'
263+00.00 LT LENGTH 4'
265+34.00 RT LENGTH 4'

CONSTRUCT DRIVE (GRAVEL)
263+00.00 LT (WIDTH 14')
265+34.00 RT (WIDTH 14')

COLD PLANING, BITUMINOUS PAVEMENT

FROM STA		TO STA.
261+00.00	-	261+50.00

RELOCATE MAILBOX, SINGLE SUPPORT

REMOVE LOCATION	TH #9	105+78.00 LT
NEW LOCATION	VT RT. 2	265+48.00 RT

PRIVATE DRIVE RT CURVE DATA

△ = 67°43'09.66"
D = 229°10'59.22"
R = 25.00'
T = 16.77'
L = 29.55'
E = 5.11'

REMOVE AND RELOCATE
MAIL BOX AND SUPPORT
(NEW LOCATION)

HVCTRL #8
NORTH = 58775.56
EAST = 88782.81
ELEV = 458.69

PI STA. 266+03.38 BK.=
STA. 265+76.90 AH.

REMOVE AND RELOCATE
MAIL BOX AND SUPPORT
(REMOVE LOCATION)

PI STA. 105+93.88 BK=
STA. 105+62.04 AH

TH 9 CURVE #1 DATA

△ = 93°17'16"
D = 88°08'50"
R = 65.00'
T = 68.84'
L = 105.83'
E = 29.68'

PC
Sta 68+11.35

PI
STA. 68+28.13 BK=
STA. 68+24.13 AH

PT
Sta 68+40.90

END DRIVE
STA. 69+06

POE
Sta 69+05.75

69+00

68+00

67+00

SCALE IN FEET
0 20 40

FIELD
CLASS III WETLAND
WOODS
TILL LEDGE
FIELD DRIVE
GRANITE POSTS (RETAIN)
GRANITE POST (TIE)
FOUNDATION
GRAVEL DRIVE
M APPLE
M MAPLE
M CHERRY
3 M MAPLES
SIGN
#45-L9
#45-L8
AER E&T
CZ
1:4
1:6

LAYOUT SHEET 1

PROJECT NAME: MORETOWN-MIDDLESEX
PROJECT NUMBER: BRS 0284(14)

FILE NAME: 78f219\structures\s78f219bdr.dgn
PROJECT LEADER: M. Evans-Mongeon
DESIGNED BY: S.SCRIBNER
IPARM: s78f2191l.i
PLOT DATE: 15-JUN-2009
DRAWN BY: L. DUQUETTE
CHECKED BY: S. SCRIBNER
SHEET 12 OF 103

N

VT STATE PLANE GRID

ANCHOR FOR STEEL BEAM RAIL
VT RT. 2
267+97.50 LT
272+41.50 LT
272+64.00 RT
TH #9
105+08.00 RT

US ROUTE 2 CURVE#1 DATA
△ = 44°30'56"
D = 9°00'00"
R = 636.6200'
T = 260.55'
L = 494.62'
E = 51.25'

REMOVAL AND DISPOSAL OF GUARDRAIL
268+72 86.8' RT ~ 269+36 85.8' RT
272+46 64.1' RT ~ 273+00 53.8' RT
272+38 42.8' RT ~ 273+00 27.2' RT
268+94 116.6' RT ~ 269+38 108.1' RT

GUARDRAIL APPROACH SECTION, GALVANIZED NETC 2 RAIL
268+29.22 ~ 268+58.72 LT
268+46.96 ~ 268+76.46 RT
271+83+.54 ~ 272+13.04 LT
272+02.32 ~ 272+31.82 RT

BRIDGE RAILING, GALVANIZED NETC 2 RAIL
268+58.72 ~ 271+83.54 LT
268+76.46 ~ 272+02.32 RT

CHAIN-LINK FENCE, 6 FEET
271+66.87 ~ 272+63.51LT
272+90.42 ~ 273+00.00 LT

CONSTRUCT DRIVE (PAVED)
272+76.96 LT (30')

REMOVAL OF EXISTING FENCE
271+91.00 ~ 273+00.00 RT

GATE FOR CHAIN LINK FENCE, 6 FEET
272+63.51 ~ 272+90.42 LT

CURB DOWNSPOUT
269+97.60 LT

CAST-IN-PLACE CONCRETE CURB, TYPE B
SEE "APPROACH RAILING DETAILS" FOR LENGTHS

STEEL BEAM GUARDRAIL, GALVANIZED
VT ROUTE 2
267+90.80 ~ 268+29.22 LT
267+00.00 ~ 268+46.96 RT
272+13.04 ~ 272+47.29 LT
272+31.82 ~ 272+70.47 RT
TH #9
105+01.44 ~ 106+06.50 RT

STA. 268+87.26
BEGIN BRIDGE

STA. 270+30.00
℄ PIER

MAINLINE 271+43.50=
CHANNEL LINE 52+92.60
= 67°00'00" RT.

ML CURVE DATA
△ = 40°28'28"
D = 12°00'00"
R = 477.4648'
T = 176.03'
L = 337.29'
E = 31.41'
BANK = 0.040

PROPOSED 90'x12'x 2' TREE BED FOR 7 TREES SEE LANDSCAPE TREE PLANTING DETAIL

1 WHITE SPRUCE IN A 15 FT X 10 FT BED SEE LANDSCAPE TREE PLANTING DETAIL

NEW CHAIN LINK FENCE SEE STANDARD F-4

STA. 271+72.74
END BRIDGE

PC Sta 271+80.03

F1 F2 F3 F4 F5 30'-0"

POE Sta 54+60.00

54+60

54+00

52+00

51+00

PT Sta 268+37.45

MATCH LINE STA. 267+00

MATCH LINE STA. 273+00

US RT. 2
TO WATERBURY

US RT. 2
TO MONTPELIER

268+00

269+00

270+00

271+00

272+00

273

S46°34'22.31"E

N35°14'24.06"W

N5°25'14.04"E

105+00

104+00

103+00

1.85%

1.00%

cz

AER E&T

AER E

T

UT UE

26' R

24' R

PROPOSED PULL OFF

PC Sta 105+85.04

PT Sta 106+30.88

PT Sta 104+58.68

PC Sta 103+16.75

PT Sta 103+90.85 BK=
103+84.58 AH

EXISTING R.O.W.

R.O.W.

EXISTING ABUTMENTS TO BE REMOVED TO BELOW FINISHED GRADE. PIER TO BE REMOVED TO BELOW BOTTOM OF STREAM BED. SEE GENERAL NOTES FOR ELEVATIONS.

EXISTING ABUT 1

EXISTING PIER 1

EXISTING PIER 2

EXISTING ABUT 2

COMB POLE #85/L57/R 27/10/17 (TIE)

HVCTRL #9
NORTH = 58482.34
EAST = 88968.86
ELEV. = 457.48

TH 9 CURVE #1 DATA
△ = 93°17'16"
D = 88°08'50"
R = 65.00'
T = 68.84'
L = 105.83'
E = 29.68'

TH 9 CURVE #2 DATA
△ = 40°39'38"
D = 28°38'52"
R = 200.00'
T = 74.10'
L = 141.93'
E = 13.29'

CHAIN LINK FENCE TURNING POINTS		
POINT	STA.	OFF SET
F1	271+66.89	49.00 FT (LT)
F2	272+43.50	47.00 FT (LT)
F3	272+43.50	56.00 FT (LT)
F4	272+63.51	54.90 FT (LT)
F5	272+90.42	54.86 FT (LT)

① TH #9 STA. 103+50.00 LT NEW 18" CPEPES/CAAPES/PCCSPES

② TH #9 STA. 103+50.00 LT ~ 103+50.00 RT
NEW 18" PIPE LENGTH 56'-0" CPEP/CAAP/PCCSP

③ TH #9 STA. 103+50.00 RT NEW 18" CPEPES/CAAPES/PCCSPES

④ TH #9 STA. 104+33.00 RT REMOVE PIPE HEADWALL
-TRENCH EXCAVATION OF ROCK

⑤ TH #9 STA. 104+33.00 RT ~ 104+44.00 LT
REMOVE 18" PIPE

⑥ TH #9 STA. 104+44.00 LT REMOVE PIPE HEADWALL
-TRENCH EXCAVATION OF ROCK

⑦ US 2 STA. 271+85, 4.49' LT REMOVE PIPE WITHIN COFFERDAM LIMITS AS COFFERDAM EXCAVATION. FILL REMAINING 18" ACCGMP WITH SPECIAL PROVISION (CONTROLLED DENSITY (FLOWABLE) FILL)

DELINEATOR WITH STEEL POST
VT ROUTE 2
267+20.50 18' RT (BLUE)
268+01.40 18' LT (GREEN)
272+58.50 18' RT (GREEN)
272+36.00 18' LT (BLUE
TH #9
103+50.00 29' RT (WHITE)
103+50.00 26' LT (WHITE)
105+05.00 18' RT (BLUE)

0 20 40
SCALE IN FEET

LAYOUT SHEET 2

PROJECT NAME: MORETOWN-MIDDLESEX
PROJECT NUMBER: BRS 0284(14)

FILE NAME: 78f219\structures\s78f219bdr.dgn
PROJECT LEADER: M. Evans-Mongeon
DESIGNED BY: S.SCRIBNER
IPARM: s78f21912.i
PLOT DATE: 15-JUN-2009
DRAWN BY: L.DUQUETTE
CHECKED BY: S. SCRIBNER
SHEET 13 OF 103

CHAIN LINK FENCE TURNING POINTS		
POINT	STA.	OFF SET
F6	273+11.00	56.00 FT (LT)
F7	273+19.00	31.00 FT (LT)
F8	273+65.95	38.10 FT (LT)
F9	273+83.99	42.29 FT (LT)
F10	274+50.00	64.48 FT (LT)

ML CURVE DATA

Δ = 40°28'28"
D = 12°00'00"
R = 477.4648'
T = 176.03'
L = 337.29'
E = 31.41'
BANK = 0.040

COLD PLANING, BITUMINOUS PAVEMENT
277+75.00 ~ 278+50.00

REMOVAL OF EXISTING FENCE
273+00.00 ~ 274+76.26 LT

CHAIN-LINK FENCE (6')
273+00.00 ~ 273+65.95 LT
273+83.99 ~ 274+76.08 LT

GATE FOR CHAIN-LINK FENCE, 6 FEET
273+65.95 ~ 273+83.99 LT

CONSTRUCT DRIVE (PAVED)
273+75.00 LT (WIDTH 20')

REMOVAL AND DISPOSAL OF GUARDRAIL
272+38.00 44.0' ~ 273+37.00 14.6' RT
272+44.00 64.7' ~ 274+50.00 26.1' RT

DELINEATOR WITH STEEL POST
VT ROUTE 2
273+87.00 56' RT (WHITE)
274+54.00 51' LT (WHITE)

N
VT STATE PLANE GRID

7 FILL EXISTING 18" ACCGMP WITH SPECIAL PROVISION (CONTROLLED DENSITY (FLOWABLE) FILL)

8 STA. 274+55.15 REMOVE EXISTING DROP INLET OFFSET 52'-2" LT -TRENCH EXCAVATION OF ROCK

9 NEW PRECAST REINFORCED CONCRETE PIPE DI WITH CAST IRON GRATE 274+55.15 OFFSET 52'-2"' LT

10 NEW 18" CPEP/CAAP/PCCSP PIPE 273+83.55 OFFSET 60.60' RT TO 274+54.65 OFFSET 51.09' LT LENGTH = 126'-3")

11 NEW 18" CPEPES/CAAPES/CSPES 273+83.55 OFFSET 60.60' RT

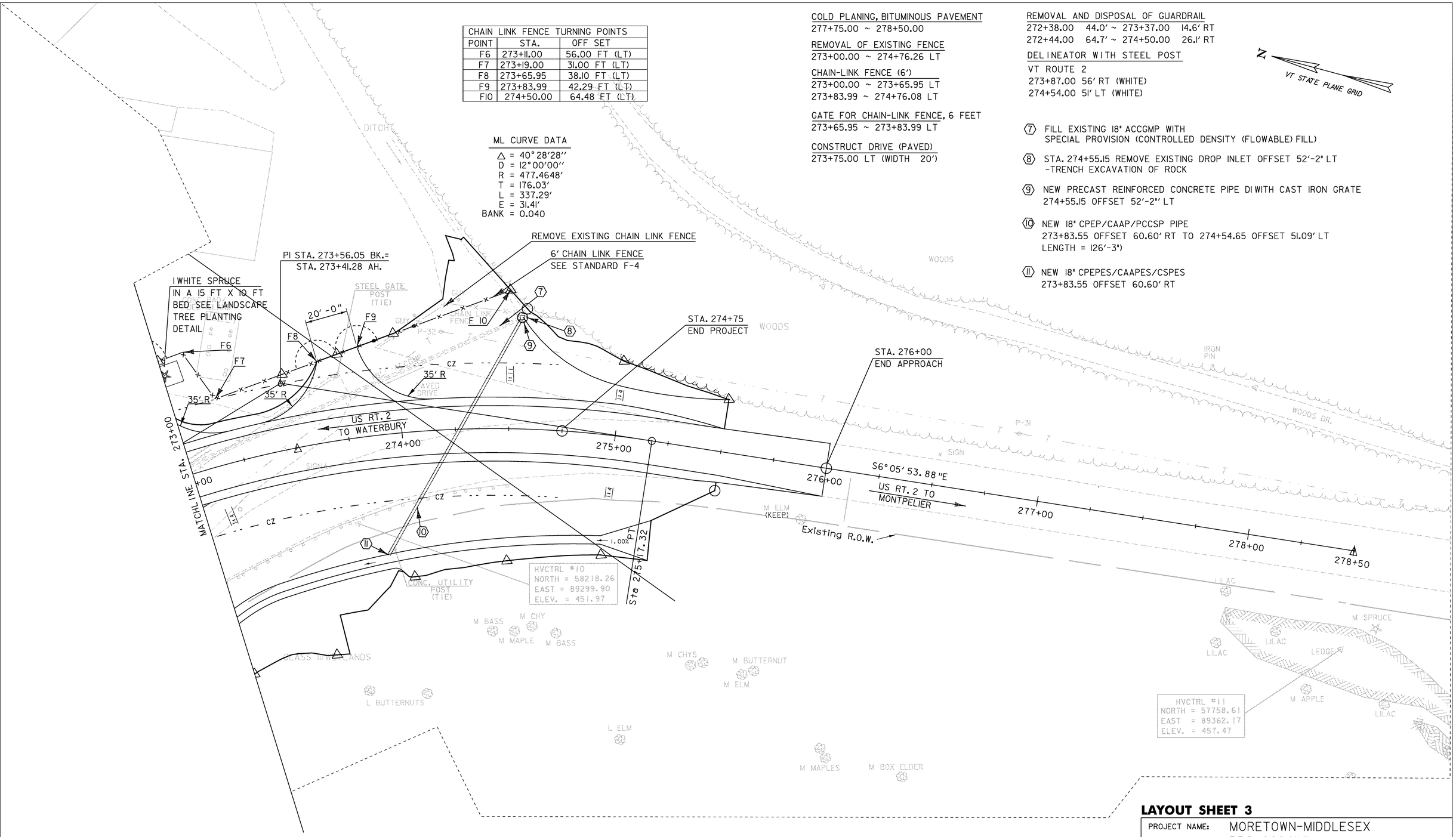

0 20 40
SCALE IN FEET

LAYOUT SHEET 3

PROJECT NAME: MORETOWN-MIDDLESEX
PROJECT NUMBER: BRS 0284(14)

FILE NAME: 78f219\structures\s78f219bdr.dgn
PROJECT LEADER: M. Evans-Mongeon
DESIGNED BY: S.SCRIBNER
IPARM: s78f21913.1
PLOT DATE: 15-JUN-2009
DRAWN BY: L. DUQUETTE
CHECKED BY: S. SCRIBNER
SHEET 14 OF 103

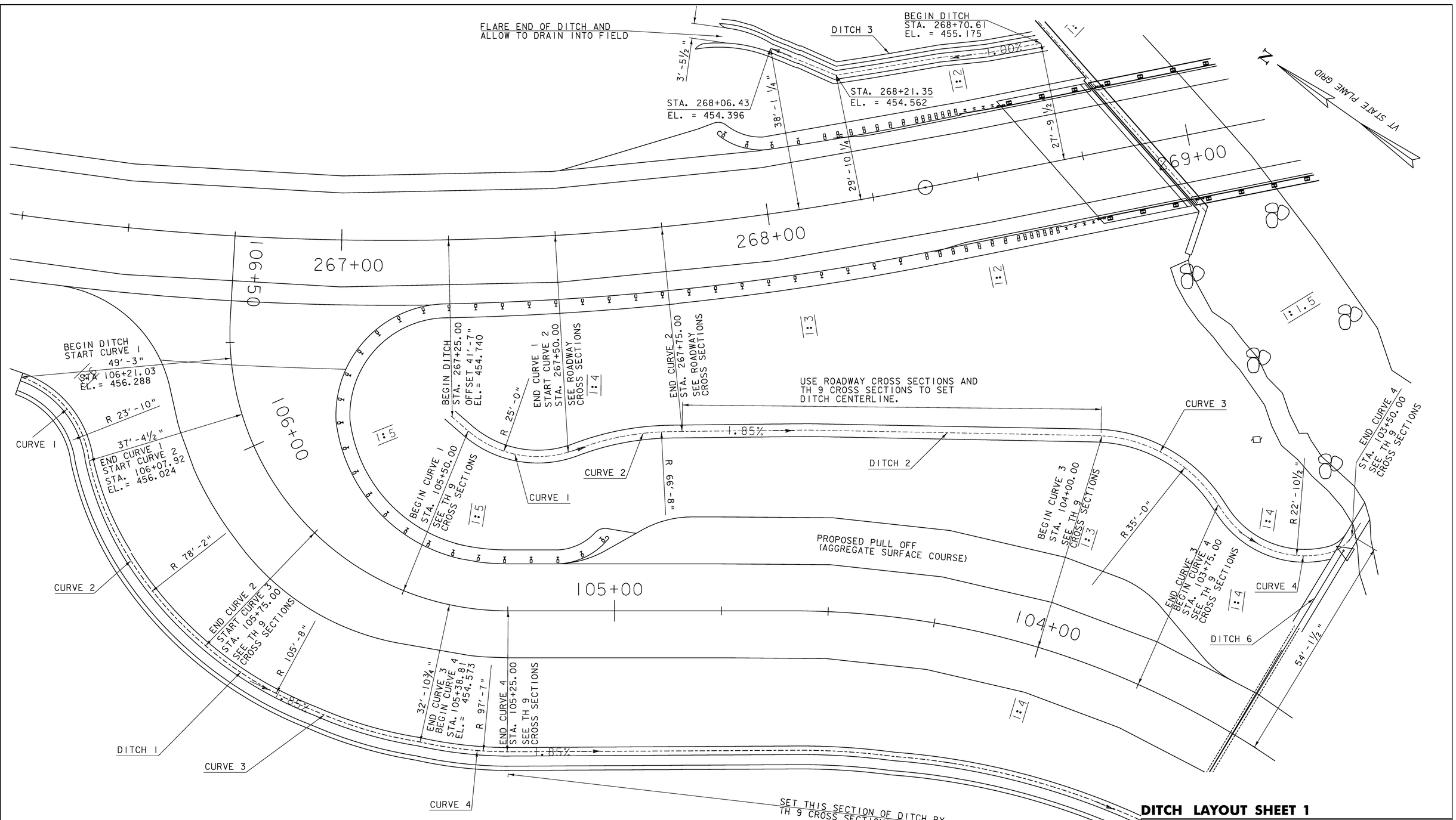

NOTE: THE INFORMATION IN THIS PLAN SHEET SHALL BE USED IN CONJUNCTION WITH THE ROADWAY CROSS SECTIONS AND TH#9 CROSS SECTONS FOR PROPER DITCH LAYOUT.

ALL DIMENSIONS ON THIS SHEET ARE MEASURED FROM THE CENTERLINE OF RT. 2 OR TH 9 TO THE CENTER OF THE INDICATED DITCH

SCALE 1" = 10'-0"
10 0 10

DITCH LAYOUT SHEET 1

PROJECT NAME: MORETOWN-MIDDLESEX
PROJECT NUMBER: BRS 0284(14)

FILE NAME: 78f219\STR\s78f219dlp.dgn
PROJECT LEADER: M. EVANS-MONGEON
DESIGNED BY: G. ROKES
PLOT DATE: 15-JUN-2009
DRAWN BY: G. ROKES
CHECKED BY: S. SCRIBNER
SHEET 15 OF 103

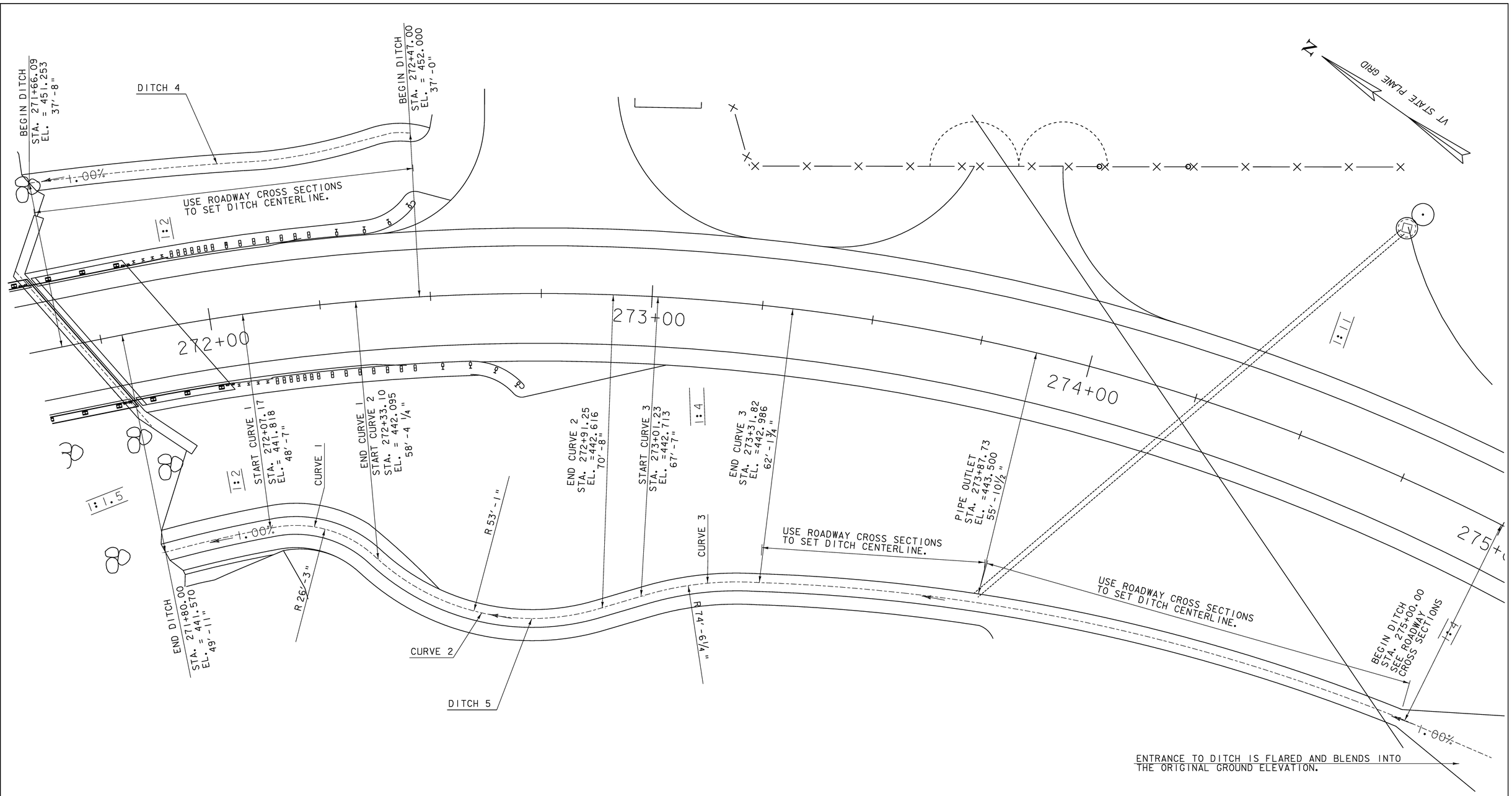

ALL DIMENSIONS ON THIS SHEET ARE MEASURED FROM THE CENTERLINE OF RT. 2 TO THE CENTER OF THE INDICATED DITCH

NOTE: THE INFORMATION IN THIS PLAN SHEET SHALL BE USED IN CONJUNCTION WITH THE ROADWAY CROSS SECTIONS FOR PROPER DITCH LAYOUT.

SCALE 1" = 10'-0"
10 0 10

DITCH LAYOUT SHEET 2

PROJECT NAME:	MORETOWN-MIDDLESEX
PROJECT NUMBER:	BRS 0284(14)
FILE NAME: 78f219\STR\s78f219dlp.DGN	PLOT DATE: 15-JUN-2009
PROJECT LEADER: M. EVANS-MONGEON	DRAWN BY: G.ROKES
DESIGNED BY: G.ROKES	CHECKED BY: S. SCRIBNER
	SHEET 16 OF 103

US 2 PROPOSED PROFILE

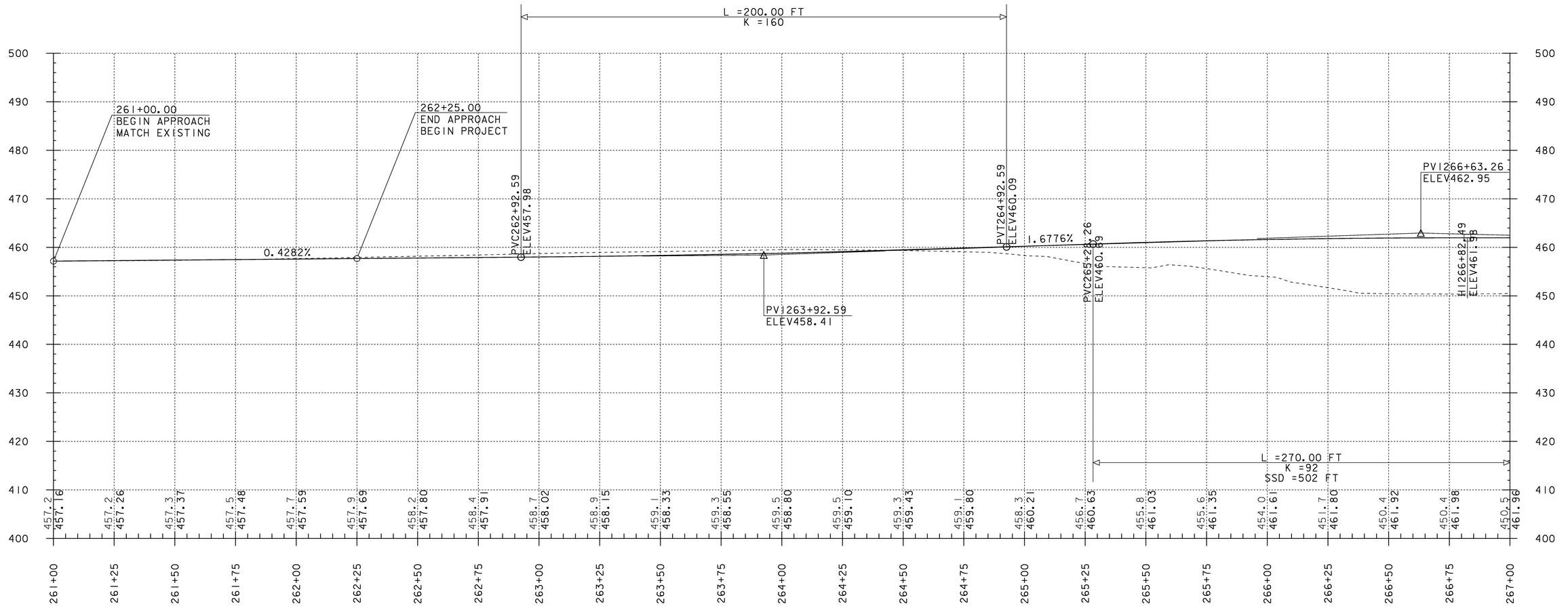

NOTE: ELEVATIONS SHOWN TO THE TENTH ARE EXISTING GROUND
ELEVATIONS SHOWN TO THE HUNDREDTH ARE FINISH GRADE

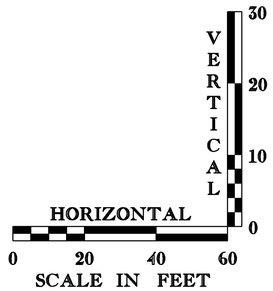

US 2 PROFILE SHEET #1

PROJECT NAME:	MORETOWN-MIDDLESEX
PROJECT NUMBER:	BRS 0284(14)

FILE NAME: 78f219/str/s78f219xs3.dgn	PLOT DATE: 15-JUN-2009
PROJECT LEADER: M. EVANS-MONGEON	DRAWN BY: L.DUQUETTE
DESIGNED BY: S. SCRIBNER	CHECKED BY: S. SCRIBNER
IPARM: s78f219pfl.i	SHEET 17 OF 103

US 2 PROPOSED PROFILE

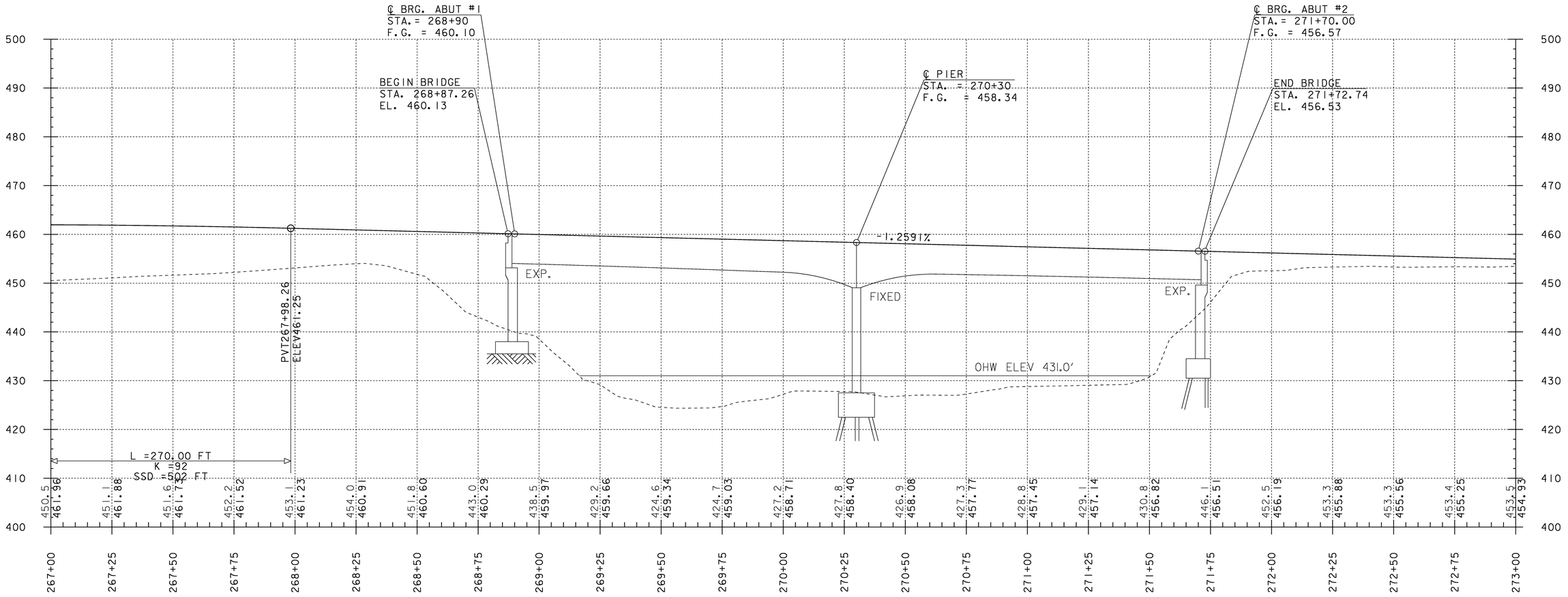

NOTE: ELEVATIONS SHOWN TO THE TENTH ARE EXISTING GROUND
ELEVATIONS SHOWN TO THE HUNDREDTH ARE FINISH GRADE

VERTICAL 0 10 20 30
HORIZONTAL 0 20 40 60
SCALE IN FEET

US 2 PROFILE SHEET #2

PROJECT NAME:	MORETOWN-MIDDLESEX
PROJECT NUMBER:	BRS 0284(14)
FILE NAME: 78f219/str/s78f219xs3.dgn	PLOT DATE: 15-JUN-2009
PROJECT LEADER: M. EVANS-MONGEON	DRAWN BY: L.DUQUETTE
DESIGNED BY: S. SCRIBNER	CHECKED BY: S. SCRIBNER
IPARM: s78f219pfl.i	SHEET 18 OF 103

US 2 PROPOSED PROFILE

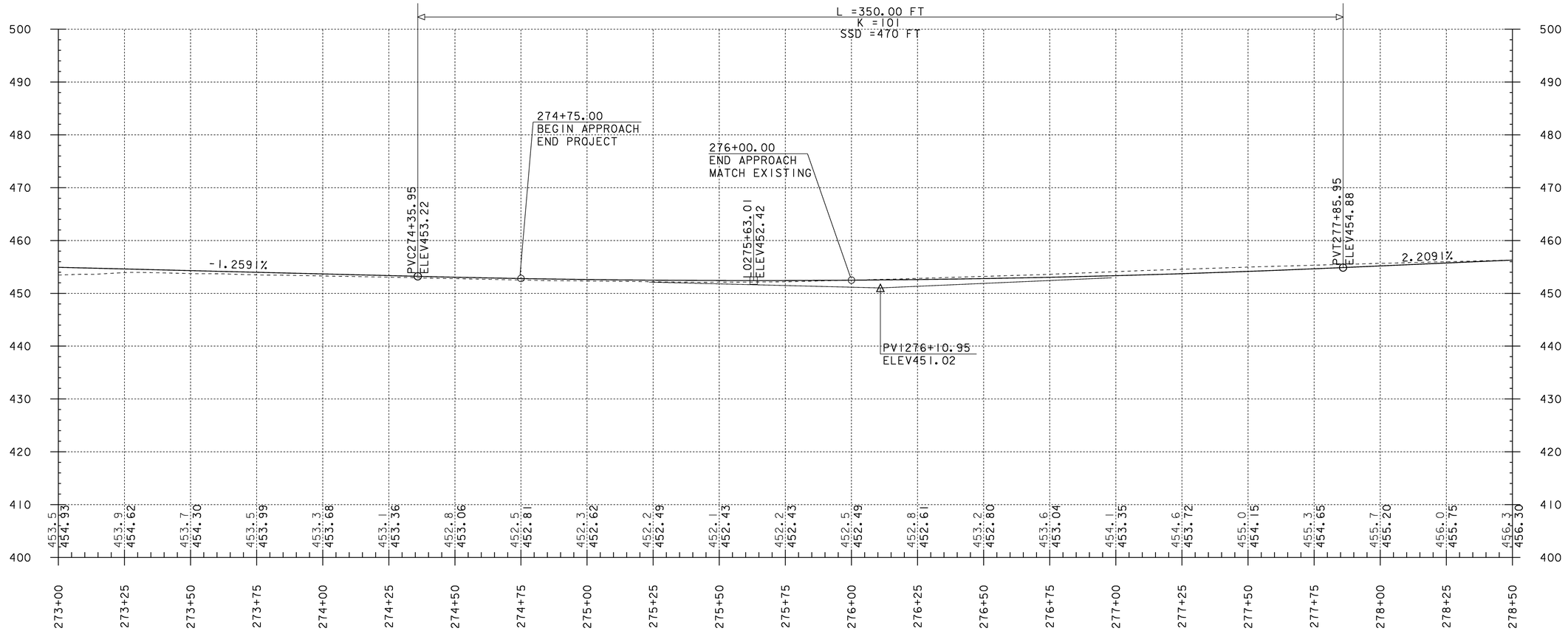

NOTE: ELEVATIONS SHOWN TO THE TENTH ARE EXISTING GROUND
ELEVATIONS SHOWN TO THE HUNDREDTH ARE FINISH GRADE

VERTICAL 0 10 20 30

HORIZONTAL 0 20 40 60

SCALE IN FEET

US 2 PROFILE SHEET #3

PROJECT NAME:	MORETOWN-MIDDLESEX
PROJECT NUMBER:	BRS 0284(14)

FILE NAME: 78f219/str/s78f219xs3.dgn	PLOT DATE: 15-JUN-2009
PROJECT LEADER: M. EVANS-MONGEON	DRAWN BY: L.DUQUETTE
DESIGNED BY: S. SCRIBNER	CHECKED BY: S. SCRIBNER
IPARM: s78f219pfl.i	SHEET 19 OF 103

TH 9 PROFILE

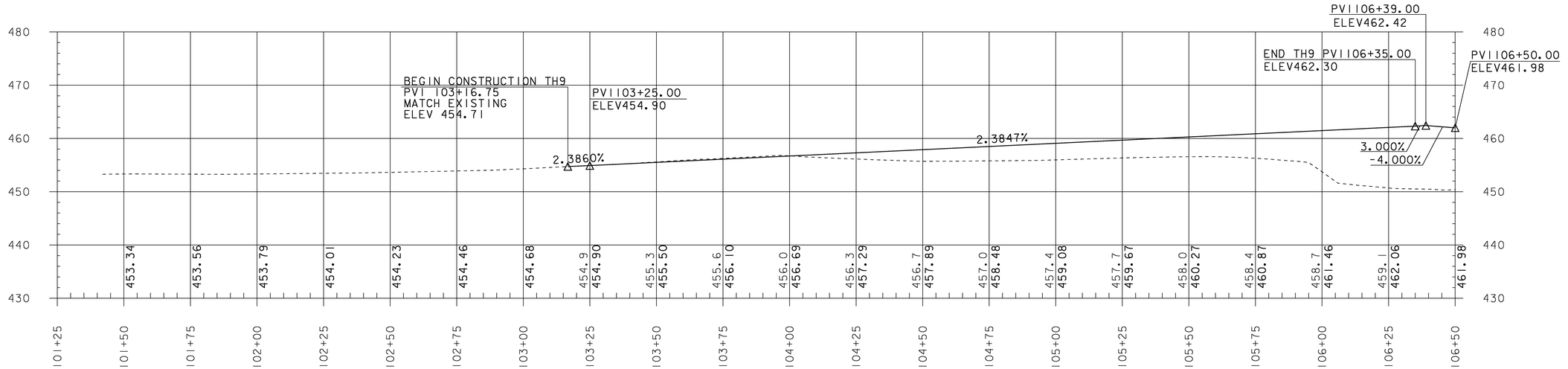

NOTE: ELEVATIONS SHOWN TO THE TENTH ARE EXISTING GROUND
ELEVATIONS SHOWN TO THE HUNDREDTH ARE FINISH GRADE

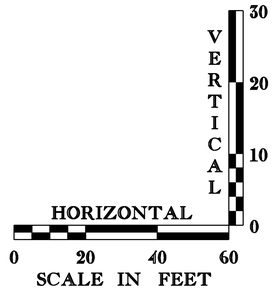

TH 9 PROFILE

PROJECT NAME: MORETOWN-MIDDLESEX
PROJECT NUMBER: BRS 0284(14)

FILE NAME: 78f219/str/s78f219xs3.dgn
PROJECT LEADER: M. Evans-Mongeon
DESIGNED BY: S. SCRIBNER
IPARM: s78f219llpfl.1

PLOT DATE: 15-JUN-2009
DRAWN BY: L. DUQUETTE
CHECKED BY: S. SCRIBNER
SHEET 20 OF 103

STATE OF VERMONT
AGENCY OF TRANSPORTATION

EROSION CONTROL NARRATIVE

PROJECT DESCRIPTION
THIS PROJECT INVOLVES THE REPLACEMENT OF A BRIDGE OVER THE WINOOSKI RIVER. THE PROJECT IS ON US ROUTE 2 BETWEEN THE TOWNS OF MORETOWN AND MIDDLESEX. THIS PROJECT INVOLVES THE REMOVAL AND REPLACEMENT OF BRIDGE NO. 50 AND SOME APPROACH AND CHANNEL WORK. A NEW TWO LANE, DOUBLE SPAN, STEEL GIRDER BRIDGE WILL BE CONSTRUCTED DOWNSTREAM OF THE EXISTING BRIDGE. TRAFFIC WILL BE MAINTAINED ON THE TEMPORARY WHICH IS ALREADY IN PLACE, DURING CONSTRUCTION. FOLLOWING COMPLETION OF THE NEW BRIDGE, THE TEMPORARY BRIDGE, ABUTMENTS AND PIERS WILL BE REMOVED. TOTAL LENGTH OF PROJECT IS 1500 FEET,INCLUDING ROADWAY APPROCHES. THE LIMITS OF CONSTRUCTION DO NOT APPROACH ANY BUILDING OR OTHER STRUCTURES BUT DO ENCROACH UPON THE DISTRICT 6 MAINTENANCE FACILITY. IT IS ANTICIPATED THAT THIS PROJECT WILL LAST TWO CONSTRUCTION SEASONS.

TOTAL DISTURBED AREA (EXCLUDING WASTE, BORROW AND STAGING AREAS)= 4.53 ACRES

SITE INVENTORY AND ANALYSIS

OFF SITE DRAINAGE CHARACTERISTICS
THE PROPERTY SURROUNDING THE PROJECT SITE CONSISTS OF WELL ESTABLISHED VEGETATION WITH MODERATE SLOPES AT THE PROJECT SITE AND MIXED SOFTWOOD AND HARDWOOD FOREST. THE PROPERTY SURROUNDING THE PROJECT SITE IS MOSTLY GRASSLAND WITH WOODS AND HILLY TO MOUNTAINOUS TERRAIN IN THE DISTANCE. DUE TO THE NATURE OF THE SURROUNDING TERRAIN THE PROJECT SITE COULD RECEIVE RUNOFF WATER ON THE PROJECT SITE FROM NEARBY SLOPES.

DRAINAGE, WATERWAYS, BODIES OF WATER
THE WINOOSKI RIVER IS LOCATED IN THE PROJECT AREA. THERE ARE NO OTHER BODIES OF WATER WITHIN THE PROJECT AREA. THE RIVER IS CLASSIFIED AS SINUOUS, ALLUVIAL, AND PROBABLY INCISED. THE CONTRIBUTING AREA AT THE BRIDGE CROSSING IS 670 SQUARE MILES.

TOPOGRAPHY, EXISTING ROADS, BUILDINGS, UTILITIES
THE TOPOGRAPHY OF THE PROJECT SITE IS MOSTLY OPEN FIELDS WITH PATCHES OF WOODED AREA. THE LAND AT THE PROJECT SITE IS MOSTLY FLAT BUT THE LAND TO THE SOUTHEAST IS STEEP IN SPOTS. THERE IS ONE HOUSE JUST OUTSIDE THE PROJECT LIMITS TO THE SOUTH AND THE DISTRICT 6 MAINTENANCE FACILITY EXISTS PARTIALLY WITHIN THE PROJECT LIMITS TO THE EAST. THE OVERHEAD POWER AND TELEPHONE LINES THAT SERVE THE MAINTENANCE FACILITY WILL BE RELOCATED.

VEGETATION
THE PROJECT SITE CONTAINS A MIXTURE OF GRASS, BRUSH, HARDWOOD AND SOFTWOOD TREES. NO FIELDS WITH AGRICULTURAL CROPS EXIST NEAR THE PROJECT. THE IMPACT TO THE VEGETATION WILL BE LIMITED TO THAT WHICH IS AFFECTED BY CONSTRUCTION OF THE NEW BRIDGE ALONG THE NEW ALIGNMENT, THE RECONSTRUCTION OF TOWN HIGHWAY 9 AND THE DRIVE. SOME MATURE TREES, MOSTLY HARDWOOD, WILL BE REMOVED FOR THE NEW ALIGNMENT.

FOLLOWING CONSTRUCTION OF THE NEW BRIDGE, THE EXISTING BRIDGE AND ROADWAY APPROACHES WILL BE REMOVED, THE SLOPES STABILIZED WITH STONE FILL AND VEGETATION REESTABLISHED WITH STANDARD SEED AND MULCH PRACTICES.

SOILS
THE SOIL CONSERVATION SERVICE HAS MAPPED THE SOILS THROUGHOUT WASHINGTON COUNTY. THE SOIL TYPES IDENTIFIED FOR THIS PROJECT SITE ARE:
1. RUMNEY FINE SANDY LOAM, WITH 0-2% SLOPES, A LOW ERODIBILITY K-VALUE OF 0.24 AND POOR DRAINING
2. ONDAWA FINE SANDY LOAM, WITH 0-3% SLOPES, A LOW ERODIBILITY K-VALUE OF 0.24 AND WELL-MODERATELY WELL DRAINING
3. TUNBRIDGE-LYMAN COMPLEX, WITH 35-60% SLOPES, A LOW ERODIBILITY K-VALUE OF 0.22 AND WELL DRAINING
4. COLTON GRAVELLY LOAMY SAND, 8-15% SLOPES, A LOW ERODIBILITY K-VALUE OF 0.15 AND WELL-EXCESSIVELY DRAINING
5. PITS, SAND AND PITS, GRAVEL, MOSTLY UNCLASSIFIED, LOCATED AROUND THE MAINTENANCE FACILITY

SENSITIVE RESOURCE AREAS
CLASS III WETLANDS WERE IDENTIFIED IN THE PROJECT AREA. THERE WILL BE SOME IMPACT TO THE WETLANDS ALTHOUGH EVERY ATTEMPT SHOULD BE MADE TO MINIMIZE OR ELIMINATE ANY IMPACT WITHIN THIS SITE.

NO THREATENED AND ENDANGERED SPECIES, PRIME AGRICULTURAL LAND, OR CRITICAL HABITATS HAVE BEEN IDENTIFIED WITHIN THE PROJECT AREA.

THE PROJECT HAS BEEN CHECKED BY ARCHAEOLOGY AND NO ARCHAEOLOGICAL RESOURCES WILL BE IMPACTED.

PROXIMITY TO NATURAL OR MAN-MADE WATER FEATURES
DISTURBANCE OF SOILS NEAR NATURAL OR MAN-MADE WATERS CONSISTS OF THAT WHICH IS NECESSARY TO CONSTRUCT THE TWO NEW CONCRETE BRIDGE ABUTMENTS, CENTER PIER, AND APPLICABLE ROADWAY APPROACHES AS WELL AS THE REMOVAL OF THE EXISTING CROSSING. STABILIZATION OF DISTURBANCE TO THE RIVER BANKS WILL BE ACCOMPLISHED WITH STONE FILL, TYPE IV AND UNDERLAIN WITH GEOTEXTILE FABRIC.

RISK EVALUATION

LOW RISK PROJECT
THE PROJECT HAS BEEN DETERMINED TO BE LOW RISK AND AS SUCH THE LOW RISK SITE HANDBOOK MUST BE ON SITE AND COMPLIED WITH.

ANY MODIFICATIONS TO THE PROJECT SHALL RESULT IN A RE-EVALUATION OF THE RISK AND THE CONTRACTOR IS RESPONSIBLE FOR RE-FILING SHOULD THE RISK CHANGE.

TEMPORARY EROSION AND SEDIMENT CONTROL

PERIMETER EROSION CONTROLS
PRIOR TO ANY CONSTRUCTION ACTIVITIES, THE PROJECT DEMARCATION FENCING (PDF) SHALL BE PLACED ALONG THE PERIMETER OF THE PROJECT AS SHOWN ON THE EROSION CONTROL PLANS. THE INSTALLATION OF THE PDF WILL BE PERFORMED SUCH THAT NO VEGETATION ON THE OUTSIDE OF THE FENCING IS DISTURBED.

PRIOR TO ANY CONSTRUCTION OR STAGING, THE CONTRACTOR WILL INSTALL STABILIZED CONSTRUCTION ENTRANCES LEADING TO STAGING AREAS AND THE PROJECT SITE TO PREVENT THE TRACKING OF SILTS AND SEDIMENTS OFFSITE. STABILIZED CONSTRUCTION ENTRANCES SHALL ALSO BE ESTABLISHED AND MAINTAINED AT ALL OFFSITE WASTE AND BORROW AREAS. (SEE DETAIL)

CONSTRUCT PERIMETER CONTROLS TO ENSURE THAT ANY DISTURBED SEDIMENT DOES NOT LEAVE THE SITE AFTER THE CLEARING OF TREES AND SHRUBS, BUT PRIOR TO ANY GRUBBING AND EXCAVATION. WATER THAT HAS BEEN ADEQUATELY TREATED, MAY BE DIRECTED TO NEARBY UNDISTURBED STREAMS OR SWALES.

INSTALL PERIMETER SILT FENCE IN AREAS OF PROPOSED WORK AS SHOWN ON THE PLANS PRIOR TO GRUBBING. IN AREAS OF EXPOSED LEDGE, STONE FILL TYPE I WILL BE UTILIZED IN A CONFIGURATION THAT WILL RETAIN SEDIMENT.

USE FILTER CURTIAN FOR SEDIMENT AND TURBITIDY CONTROL IN RIVER LOACTIONS AS INDICATED IN ESPC PLAN SHEETS.

INLET PROTECTION WILL BE USED ON DROP-INLET AT STA. 273+83.55 LT.

AFTER GRUBBING OPERATIONS, ALL AREAS OF EXPOSED SOILS SHALL BE TEMPORARILY STABILIZED WITH SEEDING, MULCHING AND EROSION CONTROL MATTING AS SOON AS PRACTICABLE AND BEFORE ANY PREDICTED RAINFALL EVENT. THESE TEMPORARY EROSION CONTROL MEASURES CAN BE PLACED IN ANY COMBINATION IN AREAS OF POTENTIAL EROSION AS DEEMED NECESSARY BY THE RESIDENT ENGINEER.

ANY MATERIAL STOCKPILES, INCLUDING BUT NOT LIMITED TO, GRUBBING MATERIAL, SAND BORROW, EARTH BORROW, GRANULAR BORROW, TOPSOIL, AND ANY EXCAVATED WASTE PILES SHALL BE MULCHED AND SHALL ALSO HAVE SILT FENCE INSTALLED AROUND THE BASE OF THE STOCKPILE.

ANY OFF-SITE AREAS WHERE BORROW OR EXCAVATED MATERIALS WILL BE STOCKPILED AND ANY WASTE DISPOSAL AREAS WILL HAVE TWO INSTALLATIONS OF SILT FENCE, 2 FEET APART AROUND THE BASE OF EACH STOCKPILE. SEEDING AND MULCHING SHALL BE PERFORMED IMMEDIATELY AFTER FINAL GRADING. REMOVAL OF THE SILT FENCES AROUND THE WASTE AREAS SHALL BE PERFORMED ONLY AFTER APPROVAL FROM THE RESIDENT ENGINEER IS OBTAINED. ALL EROSION PREVENTION AND SEDIMENT CONTROL MEASURES NECESSARY AT ACCEPTED WASTE BORROW AND STAGING AREAS SHALL BE PAID FOR IN ACCORDANCE WITH SUBSECTION 105.29

ON PARTIALLY COMPLETED FILL AND CUT SLOPES, ALL EXPOSED SLOPES WILL BE STABILIZED AS STIPULATED IN THE CONSTRUCTION GENERAL PERMIT 3-9020 AUTHORIZATION.

SEEDING, MULCHING, AND BIODEGRADABLE EROSION CONTROL MATTING OR EQUIVALENT PRODUCT WILL BE UTILIZED ON ALL SLOPES GREATER THAN 3:1 THAT ARE NOT LINED WITH STONE FILL. IN AREAS WITH LARGE SLOPES, STONE FILL UNDERLAIN WITH GEOTEXTILE FABRIC IS REQUIRED. ALL SLOPES SHALL BE STABILIZED WITHIN 48 HOURS OF REACHING FINAL GRADE OR DURING INTERMITTENT PHASES OF CONSTRUCTION ACTIVITY.

EROSION CONTROL NARRATIVE #1

PROJECT NAME: MORETOWN-MIDDLESEX
PROJECT NUMBER: BRS 0284(14)

FILE NAME: 78f219/str/s78f219erobdr.dgn	PLOT DATE: 15-JUN-2009
PROJECT LEADER: M.EVANS-MONGEON	DRAWN BY: W.FARLEY
DESIGNED BY: L.RUSSELL	CHECKED BY: W. FARLEY
IPARM: s78f219eronarr1.i	SHEET 21 OF 103

STATE OF VERMONT
AGENCY OF TRANSPORTATION

EROSION CONTROL NARRATIVE

BRIDGE EROSION

THERE WILL BE TWO TEMPORARY CAUSEWAYS REQUIRED FOR THIS PROJECT. ONE FOR THE PROPOSED STRUCTURE AND ONE FOR THE EXISTING. THE DOWNSTREAM CAUSEWAY WILL BE REQUIRED TO ACCESS THE CENTER PIER LOCATION OF THE PROPOSED STRUCTURE FOR POURING CONCRETE AND MAY ALSO BE USED TO HELP FACILITATE IN THE PLACEMENT OF THE STEEL. THE UPSTREAM CAUSEWAY WILL BE BUILT AFTER THE DOWNSTREAM CAUSEWAY HAS BEEN REMOVED. IT WILL ALLOW ACCESS TO THE CENTER PIER OF THE EXISTING STRUCTURE FOR REMOVAL. ONLY ONE CAUSEWAY MAY BE IN PLACE AT A GIVEN TIME.

THE NEW PIER SUBSTRUCTURES WILL BE CONSTRUCTED IN THE DRY, AND WILL REQUIRE THE USE OF COFFERDAMS. THE COFFERDAMS WILL BE USED AS A BARRIER TO PREVENT SEDIMENTS FROM THE SUBSTRUCTURE EXCAVATION FROM ENTERING THE STREAM. CONSTRUCTION OF THE SUBSTRUCTURES MAY REQUIRE DEWATERING OF THE COFFERDAMS. ALL WATER PUMPED FROM THE SUBSTRUCTURE AND OTHER EXCAVATION AREAS WILL BE PUMPED TO A DEWATERING DEVICE AS ACCEPTED BY THE RESIDENT ENGINEER. THE FIRST PUMPING OF THE EXCAVATIONS WILL CONTAIN THE GREATEST VOLUME OF WATER WITH THE HIGHEST SEDIMENT LOAD. IT MAY BE NECESSARY TO CONSTRUCT ADDITIONAL SETTLING STRUCTURES, OR TO CONTROL THE RATE OF DRAWDOWN OF THE EXCAVATIONS. (SEE TABLE THIS SHEET)

AFTER COMPLETION OF THE SUBSTRUCTURES, ALL COLLECTED SEDIMENTS SHOULD BE REMOVED FROM ANY DEWATERING MEASURES AND THE GROUND SHAPED TO ITS FINAL GRADE AND SLOPE. DISPOSE OF THE COLLECTED SEDIMENTS IN AN UPLAND PORTION OF THE PROJECT, OR IN A MANNER APPROVED BY THE RESIDENT ENGINEER THAT WILL NOT RESULT IN SEDIMENTS OR POLLUTANTS ENTERING THE STREAM.

FINAL EROSION AND SEDIMENT CONTROL

ROADWAY DITCHES ARE TO BE LINED WITH CLEAN, ANGULAR STONE FILL, TYPE I TO PREVENT EROSION DURING STORM EVENTS. (SEE DETAILS SHEETS)

STREAM BANKS WILL BE LINED WITH STONE FILL, TYPE IV AS SPECIFIED IN THE PLANS.

CULVERT OUTLETS WILL BE PROTECTED WITH TYPE I STONE.

GRASS OR OTHER SUITABLE GROUND COVER WILL BE ESTABLISHED OUTSIDE OF THE ROADWAY LIMITS WHERE STONE LINING HAS NOT BEEN SPECIFIED.

TREE SPECIES WILL BE PLANTED IN APPROPRIATE LOCATIONS AS SHOWN IN PLANS.

GENERAL EROSION AND SEDIMENT CONTROL GUIDELINES

THE EROSION CONTROL PLANS ARE MEANT AS A GUIDELINE FOR PREVENTING EROSION AND CONTROLLING SEDIMENT TRANSPORT. THE WORK OUTLINED IN THIS NARRATIVE CONSISTS OF APPLYING MEASURES THROUGHOUT THE LIFE OF THE PROJECT TO CONTROL EROSION AND MINIMIZE THE SEDIMENTATION OF RECEIVING WATERS. THE MEASURES INCLUDE STABILIZATION AND STRUCTURAL PRACTICES, STORM WATER CONTROLS AND OTHER POLLUTION PREVENTION CONTROLS.

THE INSTALLATION, USE, AND REMOVAL OF EROSION AND SEDIMENT CONTROL MEASURES WITH CONSTRUCTION ACTIVITIES TO ENSURE ECONOMICAL, EFFECTIVE AND CONTINUOUS EROSION AND SEDIMENT CONTROL SHALL BE COORDINATED. TEMPORARY STABILIZATION PRACTICES IN INCREMENTAL STAGES AS CONSTRUCTION PROCEEDS SHALL BE EMPLOYED. THE CONTRACTOR WILL USE ADDITIONAL EROSION CONTROL MEASURES AS NECESSITATED BY THE SEQUENCE OF CONSTRUCTION AND AS ACCEPTED BY THE RESIDENT ENGINEER.

PREVENTING INITIAL SOIL EROSION IS MUCH MORE EFFECTIVE THAN TREATING ERODED SEDIMENT. THEREFORE, STABILIZE ALL DISTURBED AREAS PROMPTLY AFTER CONSTRUCTION ACTIVITY HAS TEMPORARILY OR PERMANENTLY CEASED. INSTALL TEMPORARY CONTROLS IN INCREMENTAL STAGES AS CONSTRUCTION PROCEEDS.

MAINTAINING VEGETATED BUFFERS ALONG STREAM BANKS, WETLANDS OR OTHER SENSITIVE AREAS IS A CRUCIAL EROSION AND SEDIMENT CONTROL MEASURE THAT SHOULD BE ESTABLISHED WHEREVER POSSIBLE. IN GENERAL, PRESERVE EXISTING GRASSES,
SHRUBS, AND TREES WHEREVER POSSIBLE.

DIVERT OFF-SITE RUNOFF AS NECESSARY TO PREVENT ON-SITE EROSION.

DOT NOT ALLOW CONSTRUCTION EQUIPMENT TO OPERATE ON THE DOWN SLOPE SIDE OF PERIMETER CONTROL MEASURES.

ALL IN-STREAM CONSTRUCTION SHALL BE PERFORMED IN ACCORDANCE WITH PROJECT PERMIT REQUIREMENTS.

THIS WILL BE A MULTI SEASON PROJECT AND WILL REQUIRE SEASONAL EROSION PREVENTION AND SEDIMENT CONTROL MEASURES. IT IS RECOMMENDED THAT THOSE EROSION CONTROL MEASURES TO ESTABLISH VEGETATION TAKE PLACE BY SEPTEMBER 15TH OF EACH SEASON. INSTALL ALL EROSION AND SEDIMENT CONTROL MEASURES AS SHOWN IN THE EROSION CONTROL PLAN OR AS ACCEPTED BY THE RESIDENT ENGINEER. DO NOT MODIFY THE TYPE, SIZE OR LOCATION OF ANY CONTROL OR PRACTICE WITHOUT APPROVAL OF THE RESIDENT ENGINEER. ANY CHANGES SHALL BE NOTED ON THE PLANS, IN THE WEEKLY INSPECTION REPORT, AND REPORTED TO THE APPROPRIATE AUTHORITY IN A TIMELY MANNER. INSPECT ALL CONTROL MEASURES WEEKLY AND AFTER EACH RAINFALL EVENT. REPAIR OR REPLACE ANY DAMAGED MEASURES.

SEDIMENT SETTLING BASIN SIZING CRITERIA

PUMP FLOW RATE		REQUIRED SURFACE AREA		LENGTH / WIDTH = 2:1			
Q(gpm)	Q(m^3/s)	FT^2	M^2	L(ft)	W(ft)	L(m)	W(m)
50	0.0032	595	55	35.0	17.0	10.6	5.3
100	0.0063	1200	111	49.0	24.5	15.0	7.5
150	0.0095	1776	165	59.6	29.8	18.2	9.1
200	0.0126	2368	220	68.8	34.4	21.0	10.5
250	0.0158	2970	276	77.0	38.5	23.4	11.7
300	0.0189	3560	330	84.4	42.2	25.8	12.9
350	0.0221	4155	386	91.2	45.6	27.8	13.9

EROSION CONTROL NARRATIVE #2

PROJECT NAME: MORETOWN-MIDDLESEX
PROJECT NUMBER: BRS 0284(14)

FILE NAME: s78f219/str/s78f219erobdr.dgn
PROJECT LEADER: M.EVANS-MONGEON
DESIGNED BY: L.RUSSELL
IPARM: s78f219eronarr2.i

PLOT DATE: 15-JUN-2009
DRAWN BY: W.FARLEY
CHECKED BY: W. FARLEY
SHEET 22 OF 103

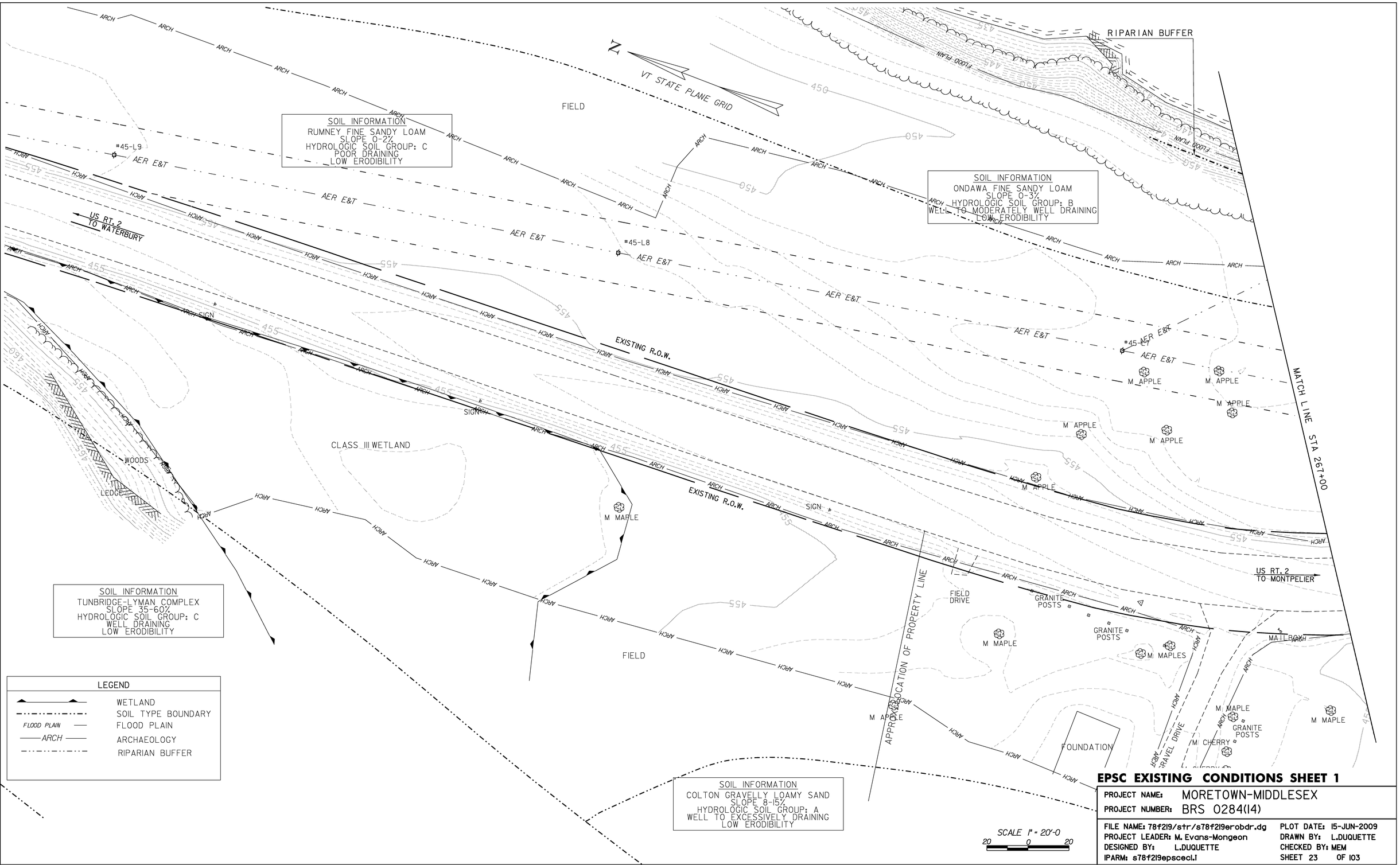

EPSC EXISTING CONDITIONS SHEET 1

PROJECT NAME:	MORETOWN-MIDDLESEX
PROJECT NUMBER:	BRS 0284(14)

FILE NAME: 78f219/str/s78f219erobdr.dg	PLOT DATE: 15-JUN-2009
PROJECT LEADER: M. Evans-Mongeon	DRAWN BY: L.DUQUETTE
DESIGNED BY: L.DUQUETTE	CHECKED BY: MEM
IPARM: s78f219epscecl.1	SHEET 23 OF 103

LEGEND

WETLAND
SOIL TYPE BOUNDARY
FLOOD PLAIN
ARCHAEOLOGY
RIPARIAN BUFFER
OHW (ORDINARY HIGH WATER)

RIPARIAN BUFFER

MATCH LINE STA 267+00

SOIL INFORMATION
ONDAWA FINE SANDY LOAM
SLOPE 0-3%
HYDROLOGIC SOIL GROUP: B
WELL TO MODERATELY WELL DRAINING
LOW ERODIBILITY

SOIL INFORMATION
RUMNEY FINE SANDY LOAM
SLOPE 0-2%
HYDROLOGIC SOIL GROUP: C
POOR DRAINING
LOW ERODIBILITY

SOIL INFORMATION
PITS, SAND AND PITS, GRAVEL

SOIL INFORMATION
ONDAWA FINE SANDY LOAM
SLOPE 0-3%
HYDROLOGIC SOIL GROUP: B
WELL TO MODERATELY WELL DRAINING
LOW ERODIBILITY

OHW
AER E&T
ARCH
WOODS
DITCH
FLOOD PLAIN
LEDGE
STONE WALL
APPLE
COMB
#45-L6
GUY
FIELD DRIVE
EXISTING R.O.W.
US RT. 2 TO WATERBURY
EXISTING 18" RCP
SIGN
#45/L5/LI
MM "A" SIGN
APPROX. LOCATION OF PROPERTY LINE
TH #9 LOVER'S LANE
VT STATE PLANE GRID
SHED
DISTRICT GARAGE
PAVED PARKING AREA
UT
UE
PINE TREE HEDGE
GRASS
FLAG POLE
EXISTING LEACH FIELD (APROX.)
18" ACCGMP
P-33
US RT. 2 TO MONTPELIER
CLASS III WETLANDS
WINOOSKI RIVER
MATCH LINE STA 273+00

SCALE 1" = 20'-0
20 0 20

EPSC EXISTING CONDITIONS SHEET 2

PROJECT NAME:	MORETOWN-MIDDLESEX
PROJECT NUMBER:	BRS 0284(14)
FILE NAME: 78f219/str/sf219erobdr.dgn	PLOT DATE: 15-JUN-2009
PROJECT LEADER: M. Evans-Mongeon	DRAWN BY: L.DUQUETTE
DESIGNED BY: L.DUQUETTE	CHECKED BY: MEM
IPARM: s78f219epscec2.i	SHEET 24 OF 103

SOIL INFORMATION
PITS, SAND AND PITS, GRAVEL

SOIL INFORMATION
TUNBRIDGE-LYMAN COMPLEX
SLOPE 35-60%
HYDROLOGIC SOIL GROUP: C
WELL DRAINING
LOW ERODIBILITY

LEGEND
- WETLAND
- SOIL TYPE BOUNDARY
- FLOOD PLAIN
- ARCHAEOLOGY
- RIPARIAN BUFFER

N
VT STATE PLANE GRID

DISTRICT GARAGE
FLOOD PLAIN
DITCH
CONC PAD/ FUEL ISLAND
GUY
CHAIN LINK FENCE
P-32
18" ACCMP
PAVED DRIVE
WOODS
IRON PIN
WOODS DR.
P-31
SIGN
US RT. 2 TO WATERBURY
US RT. 2 TO MONTPELIER
EXISTING R.O.W.
MATCH LINE STA 273+00
M ELM
M BASS
M CHY
M MAPLE
M CHYS
M BUTTERNUT
CLASS III WETLANDS
BUTTERNUTS
M MAPLES
M BOX ELDER
RIPARIAN BUFFER
LILAC
M SPRUCE
LEDGE
M APPLE
M APPLES

SOIL INFORMATION
ONDAWA FINE SANDY LOAM
SLOPE 0-3%
HYDROLOGIC SOIL GROUP: B
WELL TO MODERATELY WELL DRAINING
LOW ERODIBILITY

SCALE 1" = 20'-0"
20 0 20

EPSC EXISTING CONDITIONS SHEET 3

PROJECT NAME:	MORETOWN-MIDDLESEX
PROJECT NUMBER:	BRS 0284(14)

FILE NAME: 78f219/str/sf219erobdr.dgn	PLOT DATE: 15-JUN-2009
PROJECT LEADER: M. Evans-Mongeon	DRAWN BY: L.DUQUETTE
DESIGNED BY: L.DUQUETTE	CHECKED BY: MEM
IPARM: s78f219epscec3.i	SHEET 25 OF 103

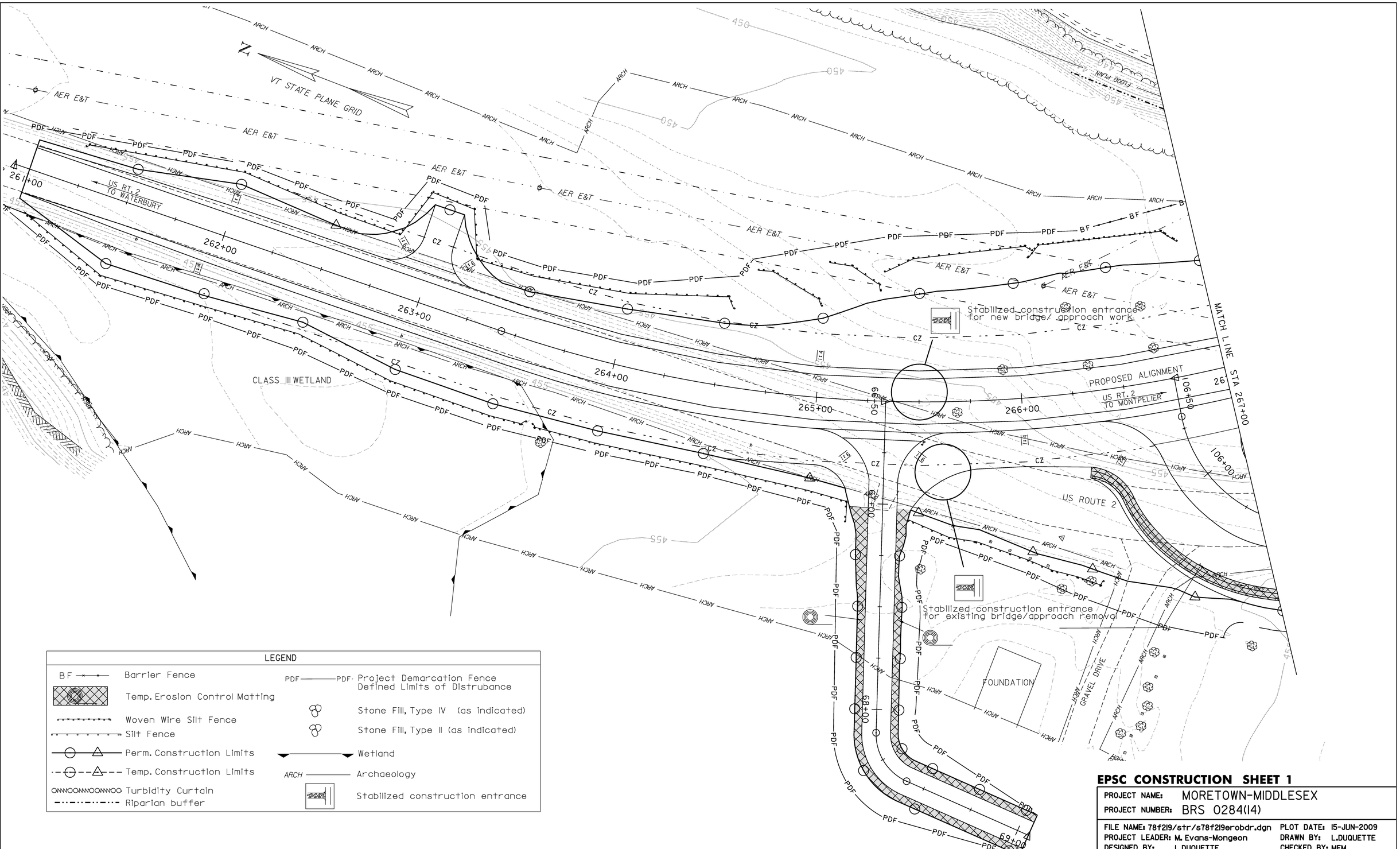

LEGEND

- BF — Barrier Fence
- Temp. Erosion Control Matting
- Woven Wire Silt Fence
- Silt Fence
- Perm. Construction Limits
- Temp. Construction Limits
- Turbidity Curtain
- Riparian buffer
- PDF — PDF — Project Demarcation Fence Defined Limits of Distrubance
- Stone Fill, Type IV (as indicated)
- Stone Fill, Type II (as indicated)
- Wetland
- ARCH — Archaeology
- Stabilized construction entrance

EPSC CONSTRUCTION SHEET 1

PROJECT NAME:	MORETOWN-MIDDLESEX
PROJECT NUMBER:	BRS 0284(14)

FILE NAME: 78f219/str/s78f219erobdr.dgn	PLOT DATE: 15-JUN-2009
PROJECT LEADER: M. Evans-Mongeon	DRAWN BY: L.DUQUETTE
DESIGNED BY: L.DUQUETTE	CHECKED BY: MEM
IPARM: s78f219epsconstrl.i	SHEET 26 OF 103

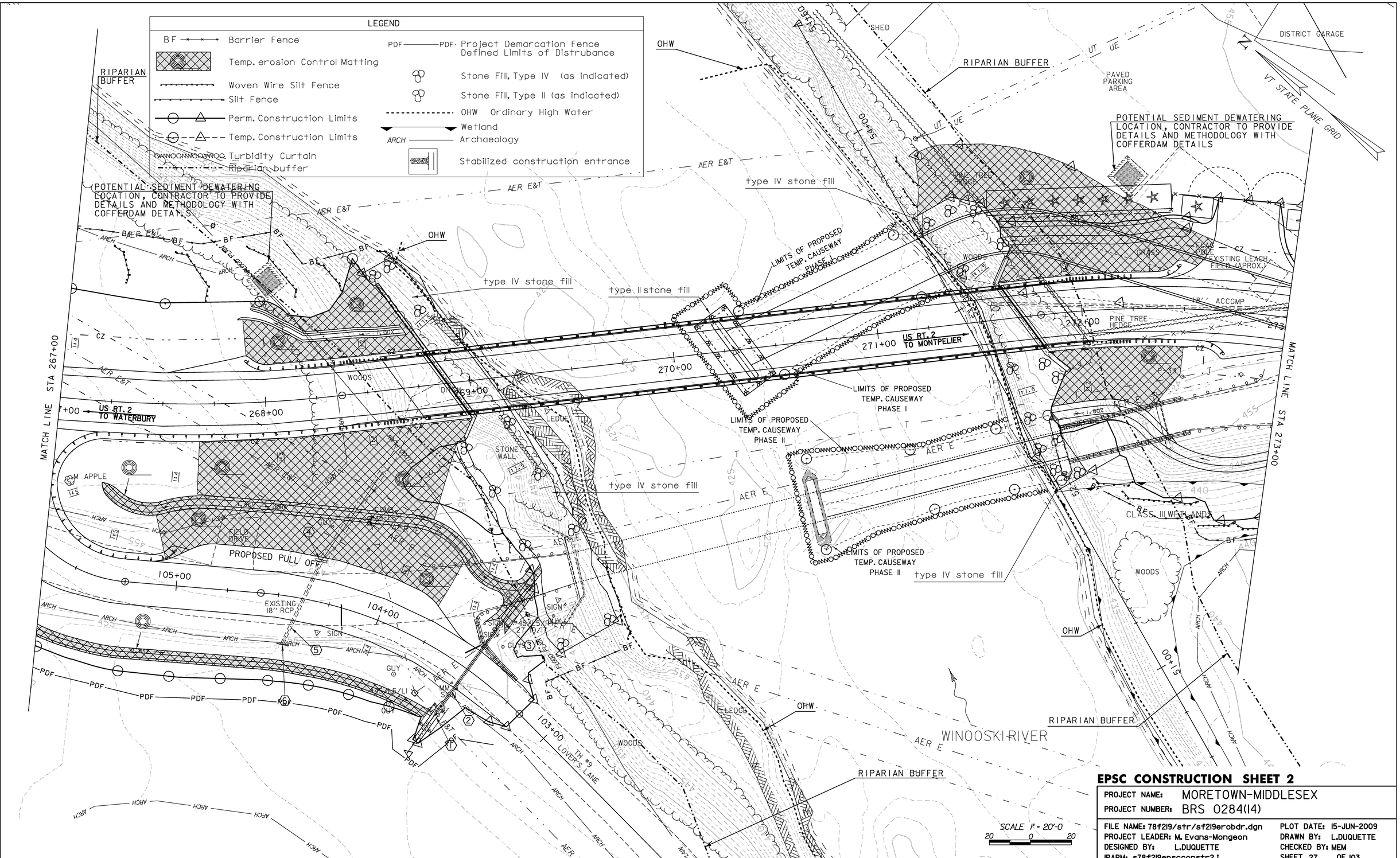

EPSC CONSTRUCTION SHEET 2

PROJECT NAME: MORETOWN-MIDDLESEX	
PROJECT NUMBER: BRS 0284(14)	
FILE NAME: 78f219/str/sf219erobdr.dgn	PLOT DATE: 15-JUN-2009
PROJECT LEADER: M. Evans-Mongeon	DRAWN BY: L.DUQUETTE
DESIGNED BY: L.DUQUETTE	CHECKED BY: MEM
IPARM: s78f219epscconstr2.1	SHEET 27 OF 103

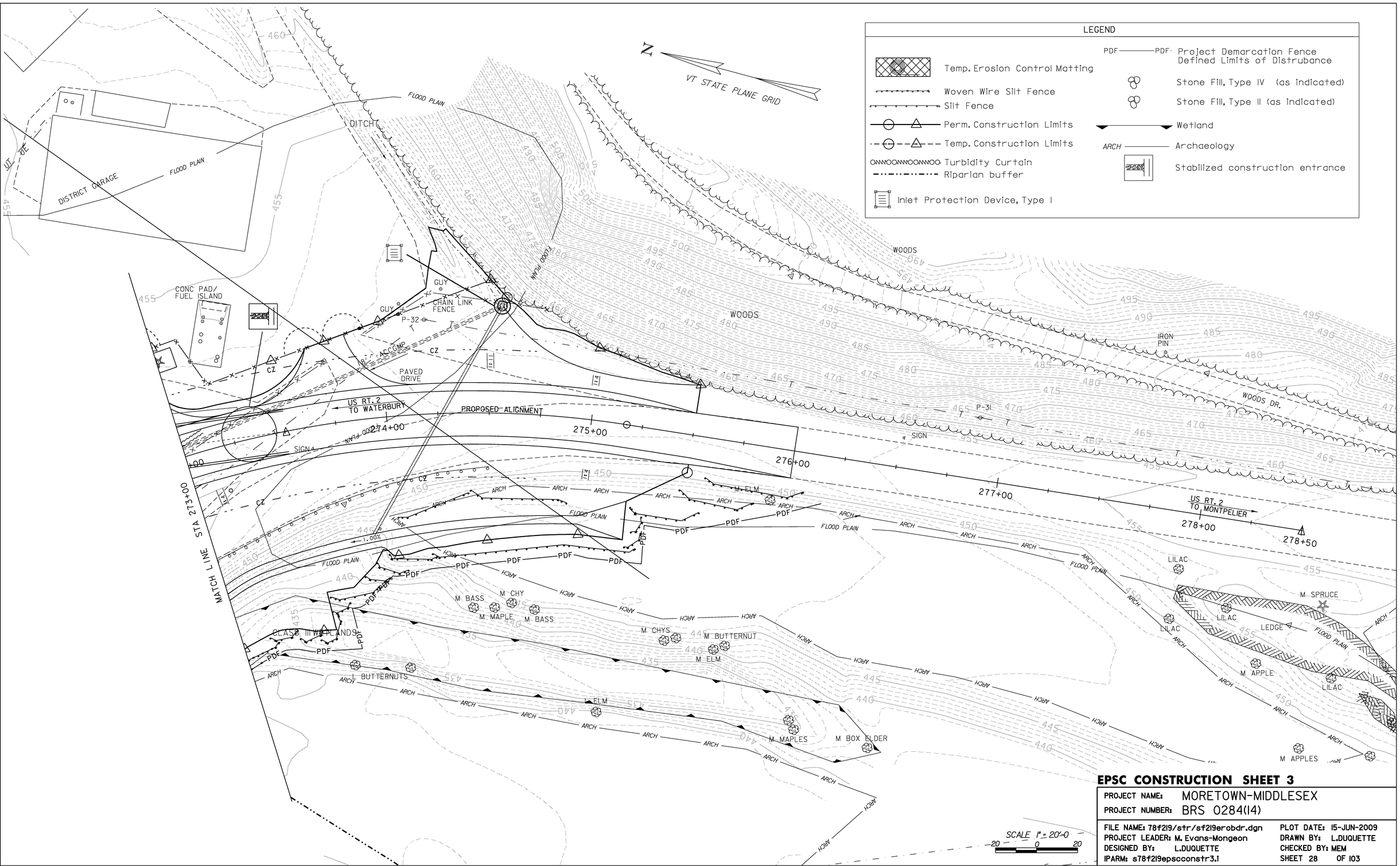

EPSC CONSTRUCTION SHEET 3

PROJECT NAME:	MORETOWN-MIDDLESEX
PROJECT NUMBER:	BRS 0284(14)

FILE NAME: 78f219/str/sf219erobdr.dgn	PLOT DATE: 15-JUN-2009
PROJECT LEADER: M. Evans-Mongeon	DRAWN BY: L.DUQUETTE
DESIGNED BY: L.DUQUETTE	CHECKED BY: MEM
IPARM: s78f219epscconstr3.1	SHEET 28 OF 103

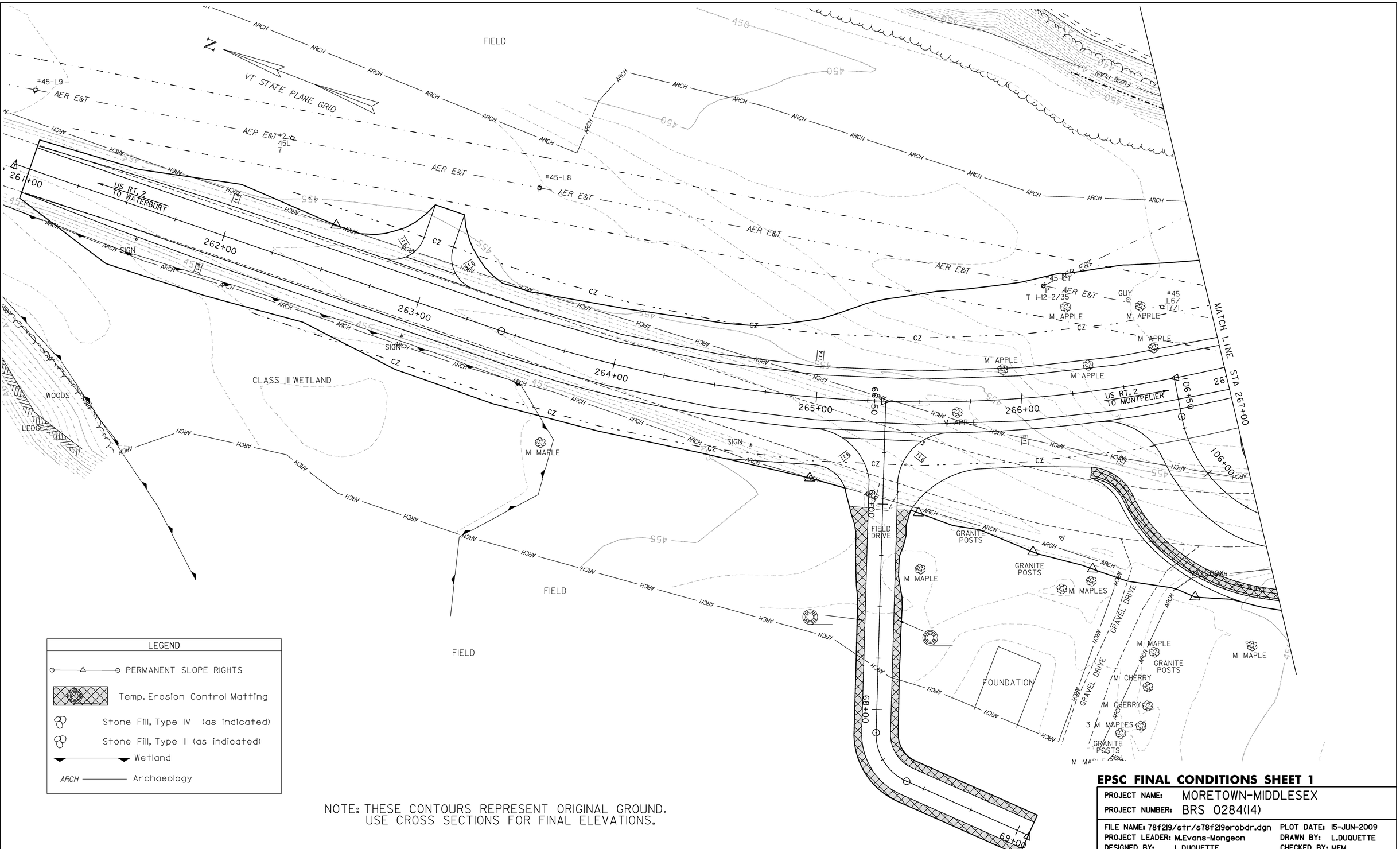

LEGEND

- PERMANENT SLOPE RIGHTS
- Temp. Erosion Control Matting
- Stone Fill, Type IV (as indicated)
- Stone Fill, Type II (as indicated)
- Wetland
- ARCH — Archaeology

NOTE: THESE CONTOURS REPRESENT ORIGINAL GROUND.
USE CROSS SECTIONS FOR FINAL ELEVATIONS.

EPSC FINAL CONDITIONS SHEET 1

PROJECT NAME:	MORETOWN-MIDDLESEX
PROJECT NUMBER:	BRS 0284(14)

FILE NAME: 78f219/str/s78f219erobdr.dgn	PLOT DATE: 15-JUN-2009
PROJECT LEADER: M.Evans-Mongeon	DRAWN BY: L.DUQUETTE
DESIGNED BY: L.DUQUETTE	CHECKED BY: MEM
IPARM: s78f219epscfinal1.i	SHEET 29 OF 103

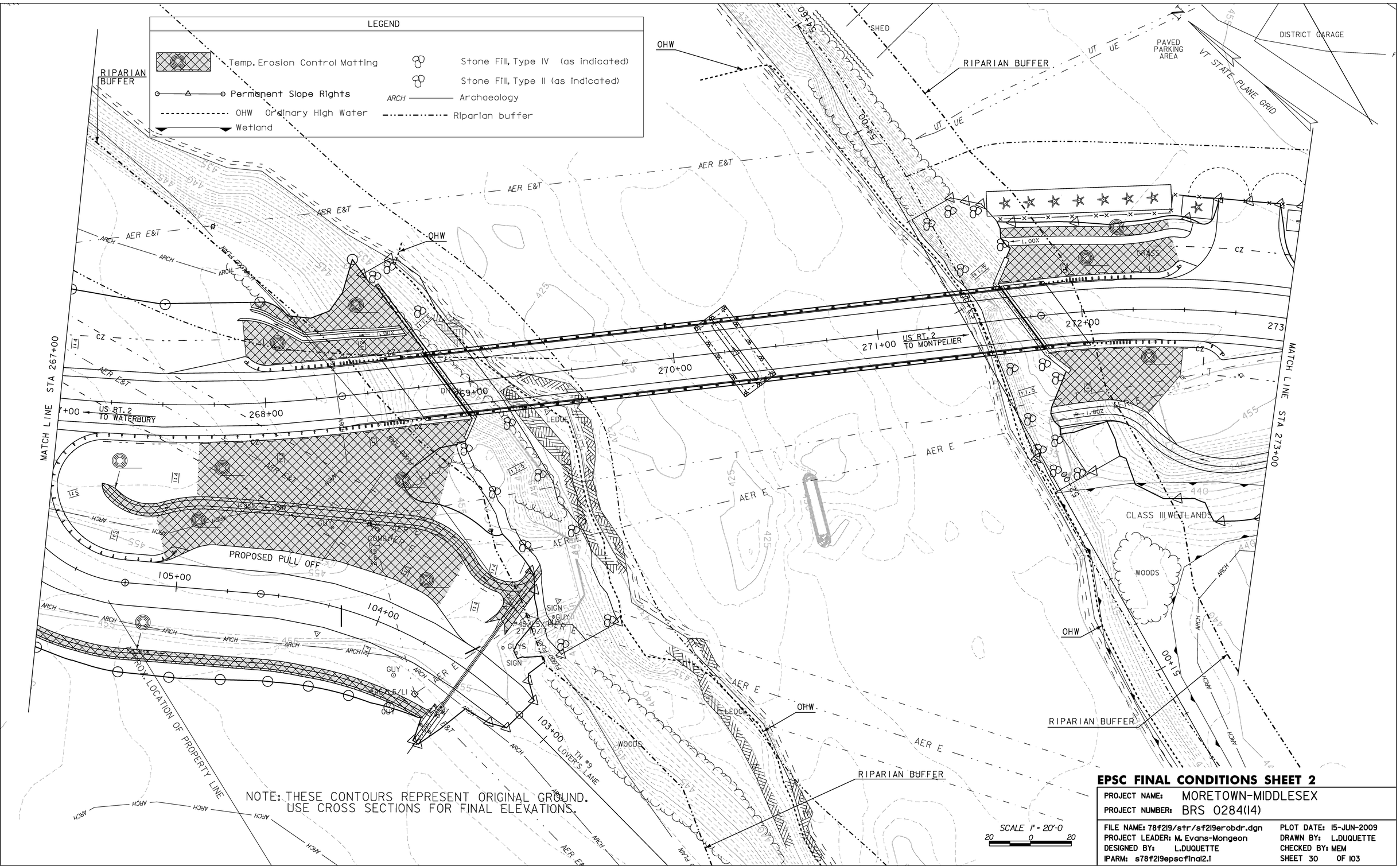

NOTE: THESE CONTOURS REPRESENT ORIGINAL GROUND.
USE CROSS SECTIONS FOR FINAL ELEVATIONS.

EPSC FINAL CONDITIONS SHEET 2

PROJECT NAME:	MORETOWN-MIDDLESEX
PROJECT NUMBER:	BRS 0284(14)

FILE NAME: 78f219/str/sf219erobdr.dgn	PLOT DATE: 15-JUN-2009
PROJECT LEADER: M. Evans-Mongeon	DRAWN BY: L.DUQUETTE
DESIGNED BY: L.DUQUETTE	CHECKED BY: MEM
IPARM: s78f219epscfinal2.1	SHEET 30 OF 103

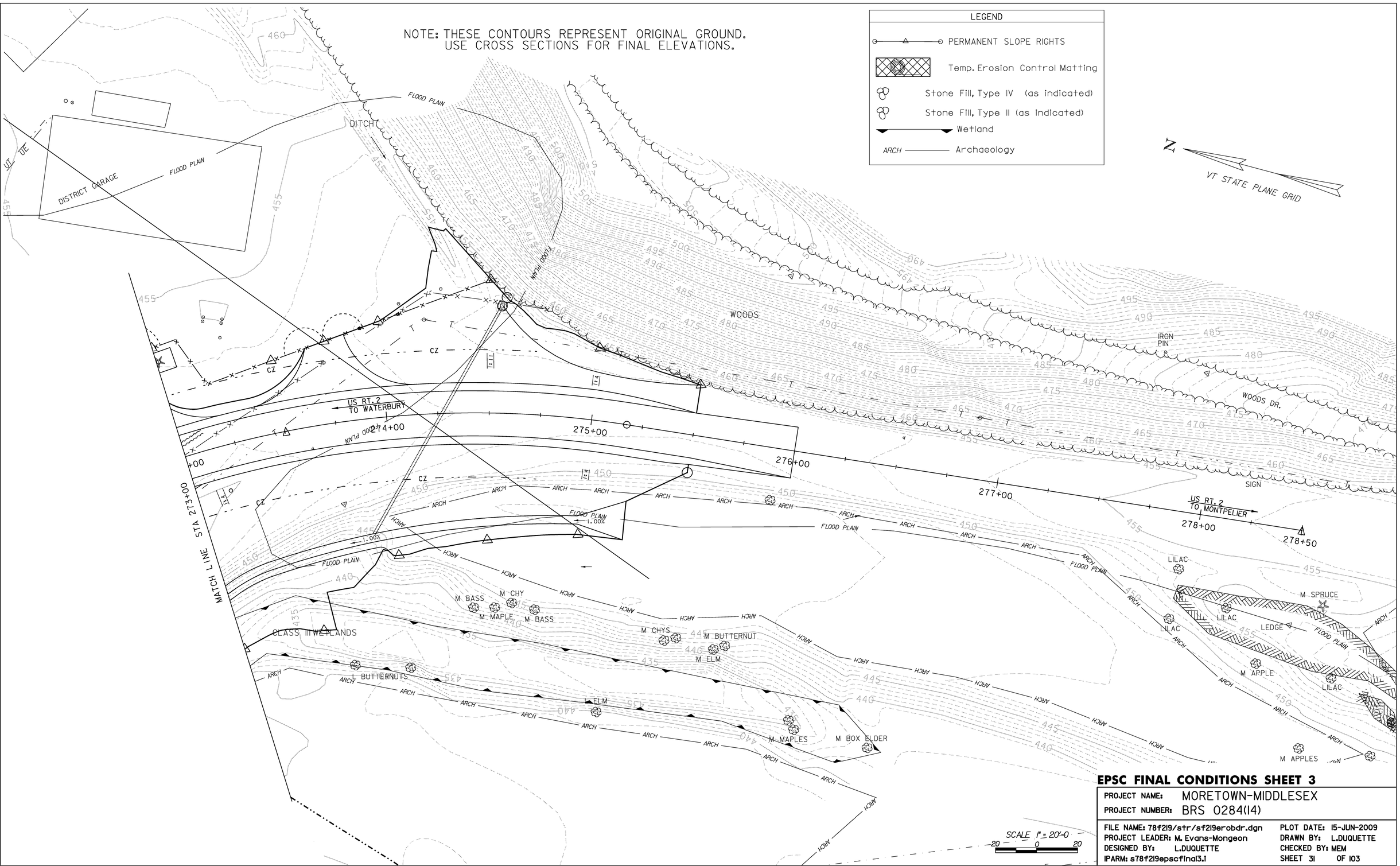

EPSC FINAL CONDITIONS SHEET 3

PROJECT NAME:	MORETOWN-MIDDLESEX
PROJECT NUMBER:	BRS 0284(14)

FILE NAME: 78f219/str/sf219erobdr.dgn	PLOT DATE: 15-JUN-2009
PROJECT LEADER: M. Evans-Mongeon	DRAWN BY: L.DUQUETTE
DESIGNED BY: L.DUQUETTE	CHECKED BY: MEM
IPARM: s78f219epscfinal3.1	SHEET 31 OF 103

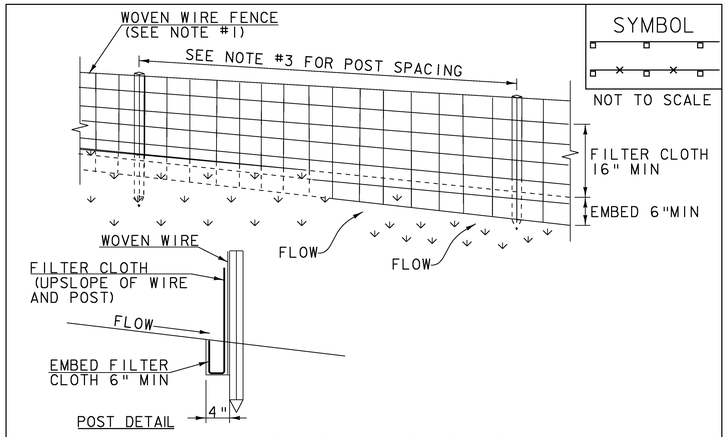

SYMBOL

NOT TO SCALE

CONSTRUCTION SPECIFICATIONS

1. WOVEN WIRE REINFORCED FENCE IS REQUIRED WITHIN 100' UPSLOPE OF RECEIVING WATERS WHEN THE PROJECT FALLS UNDER A CONSTRUCTION STORMWATER PERMIT. WOVEN WIRE SHALL BE A MIN. 14 GAUGE WITH A 6" MAX. MESH OPENING.

2. FILTER CLOTH SHALL BE EITHER FILTER X, MIRAFI100X, STABILINKA T140N OR APPROVED EQUIVALENT.

3. POST SPACING FOR WIRE-BACKED FENCE SHALL BE 10' MAXIMUM. FOR FILTER-CLOTH FENCE, WHEN ELONGATION IS >50%, POST SPACING SHALL NOT EXCEED 4' AND WHEN ELONGATION IS <50%, POST SPACING SHALL NOT EXCEED 6'.

4. WOVEN WIRE FENCE IS TO BE FASTENED SECURELY TO FENCE POSTS WITH WIRE TIES. FILTER CLOTH IS TO BE FASTENED SECURELY TO WOVEN WIRE FENCE WITH TIES SPACED EVERY 24" AT TOP AND MID SECTION.

5. WHEN TWO SECTIONS OF FILTER CLOTH ADJOIN EACH OTHER THEY SHALL BE OVER-LAPPED BY 6" AND FOLDED.

6. PREFABRICATED UNITS SHALL BE GEOFAB, ENVIROFENCE, OR APPROVED EQUIVALENT.

7. MAINTENANCE SHALL BE PERFORMED AS NEEDED AND MATERIAL REMOVED WHEN SEDIMENT REACHES HALF OF FABRIC HEIGHT.

ADAPTED FROM DETAILS PROVIDED BY: NEW YORK STATE DEC
ORIGINALLY DEVELOPED BY USDA-NRCS
VERMONT DEPARTMENT OF ENVIRONMENTAL CONSERVATION

SILT FENCE

NOTES:
REFER TO "THE VERMONT STANDARDS & SPECIFICATIONS FOR EROSION PREVENTION & SEDIMENT CONTROL -2006- " FROM THE VT AGENCY OF NATURAL RESOURCES FOR ADDITIONAL GUIDANCE.

THIS WORK SHALL BE PERFORMED IN ACCORDANCE WITH SECTION 649 AND AS SHOWN IN THE PLANS FOR GEOTEXTILE FOR SILT FENCE (PAY ITEM 649.51) OR GEOTEXTILE FOR SILT FENCE, WOVEN WIRE REINFORCED (PAY ITEM 649.515).

REVISIONS	
MARCH 21, 2008	WHF
DECEMBER 11, 2008	WHF
JANUARY 13, 2009	WHF

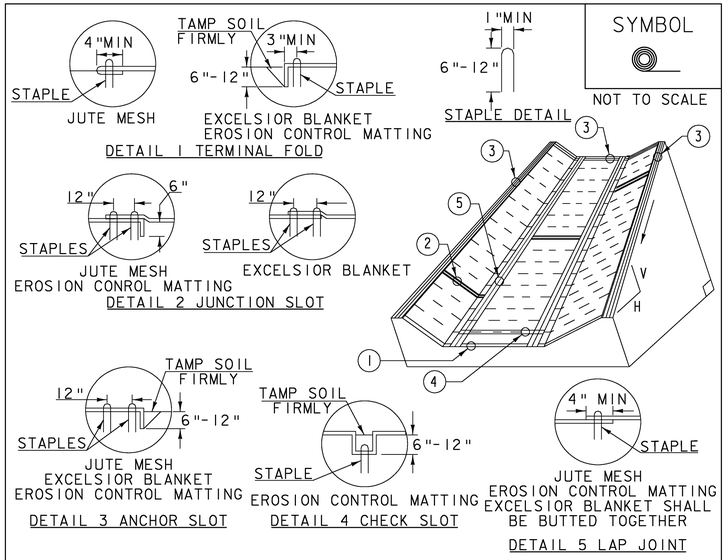

SYMBOL

NOT TO SCALE

CONSTRUCTION SPECIFICATIONS

1. EROSION MATTING, CHECK SLOTS, SHALL BE SPACED IN DITCH CHANNEL SO THAT ONE OCCURS WITHIN EACH 50' ON SLOPES OF MORE THAN 4% AND LESS THAN 6%. ON SLOPES OF 6% OR MORE, THEY SHALL BE SPACED SO THAT ONE OCCURS WITHIN EACH 25'.

2. APPLY FERTILIZER, LIME SEED PRIOR TO PLACING MATTING.

3. STAPLES ARE TO BE PLACED ALTERNATELY, IN COLUMNS APPROXIMATELY 2' APART AND IN ROWS APPROXIMATELY 3' APART. APPROXIMATELY 175 STAPLES ARE REQUIRED PER 4'X225' ROLL OF MATERIAL AND 125 STAPLES ARE REQUIRED PER 4'X150' ROLL OF MATERIAL.

4. DISTURBED AREAS SHALL BE SMOOTHLY GRADED. EROSION CONTROL MATERIAL SHALL BE PLACED LOOSELY OVER GROUND SURFACE. DO NOT STRETCH.

5. ALL TERMINAL ENDS AND TRANSVERSE LAPS SHALL BE STAPLED AT APPROXIMATELY 12" INTERVALS.

ADAPTED FROM DETAILS PROVIDED BY: NEW YORK STATE DEC
ORIGINALLY DEVELOPED BY USDA-NRCS
VERMONT DEPARTMENT OF ENVIRONMENTAL CONSERVATION

ROLLED EROSION CONTROL PRODUCT (RECP) DITCH

NOTES:
REFER TO "THE VERMONT STANDARDS & SPECIFICATIONS FOR EROSION PREVENTION & SEDIMENT CONTROL -2006- " FROM THE VT AGENCY OF NATURAL RESOURCES FOR ADDITIONAL GUIDANCE.

THIS WORK SHALL BE PERFORMED IN ACCORDANCE WITH SECTION 653 AND AS SHOWN IN THE PLANS FOR TEMPORARY EROSION MATTING (PAY ITEM 653.20) ~~OR PERMANENT EROSION MATTING (PAY ITEM 653.21)~~.

REVISIONS	
MARCH 8, 2007	JMF
APRIL 16, 2007	WHF
JANUARY 13, 2009	WHF

EPSC DETAIL SHEET 1

PROJECT NAME: MORETOWN-MIDDLESEX
PROJECT NUMBER: BRS 0284(14)

FILE NAME: structures/78f219erodet.dg
PROJECT LEADER: M. EVANS-MONGEON
DESIGNED BY: S. SCRIBNER
PLOT DATE: 15-JUN-2009
DRAWN BY: L. DUQUETTE
CHECKED BY: S. SCRIBNER
SHEET 32 OF 103

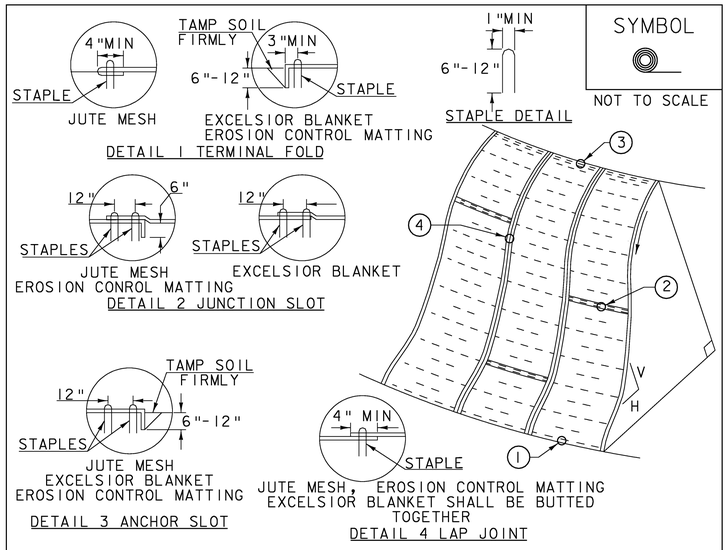

SYMBOL

NOT TO SCALE

CONSTRUCTION SPECIFICATIONS

1. APPLY TO SLOPES GREATER THAN 3H: IV OR WHERE NECESSARY TO AID IN ESTABLISHING VEGETATION.
2. APPLY FERTILIZER, LIME SEED PRIOR TO PLACING MATTING.
3. STAPLES ARE TO BE PLACED ALTERNATELY, IN COLUMNS APPROXIMATELY 2′ APART AND IN ROWS APPROXIMATELY 3′ APART. APPROXIMATELY 175 STAPLES ARE REQUIRED PER 4′X225′ ROLL OF MATERIAL AND 125 STAPLES ARE REQUIRED PER 4′X150′ ROLL OF MATERIAL.
4. DISTURBED AREAS SHALL BE SMOOTHLY GRADED. EROSION CONTROL MATERIAL SHALL BE PLACED LOOSELY OVER GROUND SURFACE. DO NOT STRETCH.
5. ALL TERMINAL ENDS AND TRANSVERSE LAPS SHALL BE STAPLED AT APPROXIMATELY 12" INTERVALS.

ADAPTED FROM DETAILS PROVIDED BY: NEW YORK STATE DEC
ORIGINALLY DEVELOPED BY USDA-NRCS
VERMONT DEPARTMENT OF ENVIRONMENTAL CONSERVATION

ROLLED EROSION CONTROL PRODUCT (RECP) SIDE SLOPE

NOTES:
REFER TO "THE VERMONT STANDARDS & SPECIFICATIONS FOR EROSION PREVENTION & SEDIMENT CONTROL -2006- " FROM THE VT AGENCY OF NATURAL RESOURCES FOR ADDITIONAL GUIDANCE.
THIS WORK SHALL BE PERFORMED IN ACCORDANCE WITH SECTION 653 AND AS SHOWN IN THE PLANS FOR TEMPORARY EROSION MATTING (PAY ITEM 653.20) ~~OR PERMANENT EROSION MATTING (PAY ITEM 653.21).~~

REVISIONS	
APRIL 16, 2007	JMF
JANUARY 13, 2009	WHF

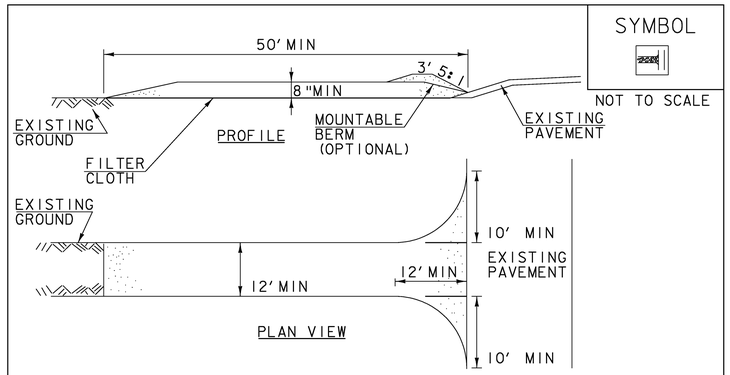

SYMBOL

NOT TO SCALE

CONSTRUCTION SPECIFICATIONS

1. STONE SIZE- USE 1-4" STONE, RECLAIMED OR RECYCLED CONCRETE EQUIVALENT.
2. LENGTH- NOT LESS THAN 50′ (EXCEPT ON A SINGLE RESIDENCE LOT WHERE A 30′ MINIMUM LENGTH APPLIES).
3. THICKNESS- NOT LESS THAN 8′.
4. WIDTH- 12′ MINIMUM, BUT NOT LESS THAN THE FULL WIDTH AT POINTS WHERE INGRESS OR EGRESS OCCURS. 24′ IF SINGLE ENTRANCE TO SITE.
5. GEOTEXTILE MUST BE PLACED OVER THE ENTIRE AREA PRIOR TO PLACING STONE.
6. SURFACE WATER- ALL SURFACE WATER FLOWING OR DIVERTED TOWARD CONSTRUCTION ENTRANCES SHALL BE PIPED BENEATH THE ENTRANCE. IF PIPING IS IMPRACTICAL, A MOUNTABLE BERM WITH 5:1 SLOPES WILL BE PERMITTED.
7. MAINTENANCE- THE ENTRANCE SHALL BE MAINTAINED IN A CONDITION WHICH WILL PREVENT TRACKING OR FLOWING OF SEDIMENT ONTO PUBLIC RIGHTS-OF-WAY, ALL SEDIMENT SPILLED, DROPPED, WASHED OR TRACKED ONTO PUBLIC RIGHTS-OF-WAY MUST BE REMOVED IMMEDIATELY.
8. WHEN WASHING IS REQUIRED, IT SHALL BE DONE ON AN AREA STABILIZED WITH STONE AND WHICH DRAINS INTO AN APPROVED SEDIMENT TRAPPING DEVICE.
9. PERIODIC INSPECTION AND NEEDED MAINTENANCE SHALL BE PROVIDED ACCORDING TO PERMIT REQUIREMENTS.

ADAPTED FROM DETAILS PROVIDED BY: NEW YORK STATE DEC
ORIGINALLY DEVELOPED BY USDA-NRCS
VERMONT DEPARTMENT OF ENVIRONMENTAL CONSERVATION

STABILIZED CONSTRUCTION ENTRANCE

NOTES:
REFER TO "THE VERMONT STANDARDS & SPECIFICATIONS FOR EROSION PREVENTION & SEDIMENT CONTROL -2006- " FROM THE VT AGENCY OF NATURAL RESOURCES FOR ADDITIONAL GUIDANCE.

THIS WORK SHALL BE PERFORMED IN ACCORDANCE WITH SECTION 653 FOR VEHICLE TRACKING PAD (PAY ITEM 653.35) OR AS SPECIFIED IN THE CONTRACT.

REVISIONS	
MARCH 24, 2008	WHF
JANUARY 13, 2009	WHF

EPSC DETAIL SHEET 2

PROJECT NAME: MORETOWN-MIDDLESEX
PROJECT NUMBER: BRS 0284(14)

FILE NAME: structures/78f219erodet.dg
PROJECT LEADER: M. EVANS-MONGEON
DESIGNED BY: S. SCRIBNER
PLOT DATE: 15-JUN-2009
DRAWN BY: L. DUQUETTE
CHECKED BY: S. SCRIBNER

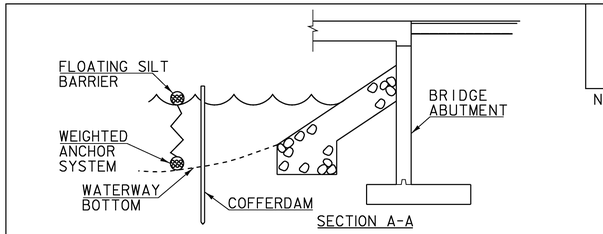

SYMBOL

NOT TO SCALE

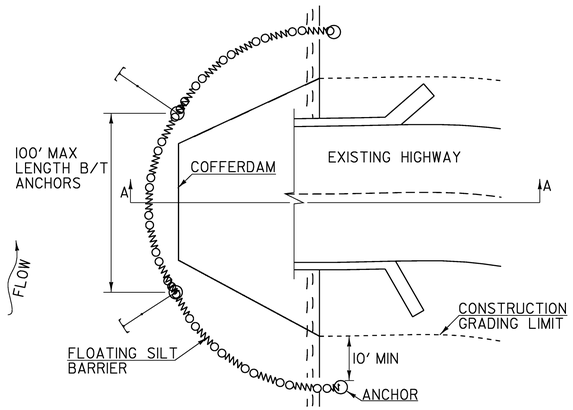

CONSTRUCTION SPECIFICATIONS

1. TURBIDITY CURTAIN SHALL NOT BE PLACED ACROSS A FLOWING WATERWAY, OR IN A WATERWAY WITH STREAM VELOCITIES GREATER THAN 1.5 FEET/SECOND.
2. MAXIMUM 100 FOOT LENGTH BETWEEN ANCHORS.
3. LAST SECTION SHALL TERMINATE A MINIMUM OF 10 FEET BEYOND LIMIT OF DISTURBANCE.
4. THE WEIGHTED ANCHOR SYSTEM SHALL BE A TYPE WHICH ALLOWS THE CURTAIN TO CONFORM TO THE BOTTOM OF THE WATERWAY.
5. THE CURTAIN SHALL BE REMOVED BY SLOWLY PULLING TOWARD THE SHORE MINIMIZING THE ESCAPE OF SEDIMENTS INTO WATERWAY.

TURBIDITY CURTAIN

REVISIONS	
APRIL 1, 2008	WHF
JANUARY 13, 2009	WHF

THIS WORK SHALL BE PERFORMED IN ACCORDANCE WITH SECTION 649 FOR GEOTEXTILE FOR FILTER CURTAIN (PAY ITEM 649.61).

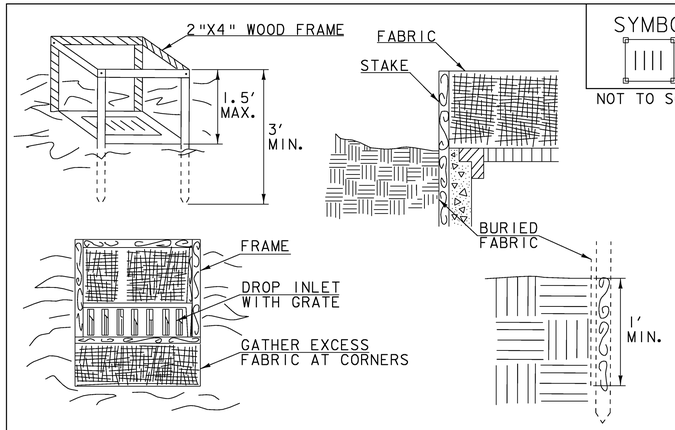

SYMBOL

NOT TO SCALE

CONSTRUCTION SPECIFICATIONS

1. FILTER FABRIC SHALL HAVE AN APPARENT OPENING SIZE OF 40-85. BURLAP MAY BE USED FOR SHORT TERM APPLICATIONS.
2. CUT FABRIC FROM A CONTINUOUS ROLL TO ELIMINATE JOINTS. IF JOINTS ARE NEEDED THEY WILL BE OVERLAPPED TO THE NEXT STAKE.
3. STAKE MATERIALS WILL BE STANDARD 2"x 4" WOOD OR EQUIVALENT METAL WITH A MINIMUM LENGTH OF 3'.
4. SPACE STAKES EVENLY AROUND INLET 3' APART AND DRIVE A MINIMUM 18" DEEP. SPANS GREATER THAN 3' MAY BE BRIDGED WITH THE USE OF WIRE MESH BEHIND THE FILTER FABRIC FOR SUPPORT.
5. FABRIC SHALL BE EMBEDDED 1' MINIMUM BELOW GROUND AND BACKFILLED. IT SHALL BE SECURELY FASTENED TO THE STAKES AND FRAME.
6. A 2" x 4" WOOD FRAME SHALL BE COMPLETED AROUND THE CREST OF THE FABRIC FOR OVER FLOW STABILITY.
7. MAXIMUM DRAINAGE AREA 1 ACRE

ADAPTED FROM DETAILS PROVIDED BY: NEW YORK STATE DEC
ORIGINALLY DEVELOPED BY USDA-NRCS
VERMONT DEPARTMENT OF ENVIRONMENTAL CONSERVATION

FILTER FABRIC DROP INLET PROTECTION

NOTES:
REFER TO "THE VERMONT STANDARDS & SPECIFICATIONS FOR EROSION PREVENTION & SEDIMENT CONTROL -2006- " FROM THE VT AGENCY OF NATURAL RESOURCES FOR ADDITIONAL GUIDANCE.

THIS WORK SHALL BE PERFORMED IN ACCORDANCE WITH SECTION 653 FOR INLET PROTECTION DEVICE, TYPE I (PAY ITEM 653.40).

REVISIONS	
MARCH 7, 2008	WHF
JANUARY 13, 2009	WHF

EPSC DETAIL SHEET 3

PROJECT NAME: MORETOWN-MIDDLESEX
PROJECT NUMBER: BRS 0284(14)

FILE NAME: structures/78f219erodet.dg
PROJECT LEADER: M. EVANS-MONGEON
DESIGNED BY: S. SCRIBNER
PLOT DATE: 15-JUN-2009
DRAWN BY: L. DUQUETTE
CHECKED BY: S. SCRIBNER
SHEET 34 OF 103

NOTES:

1. LOCATIONS AND BED SHAPES ARE APPROXIMATE AND MAY VARY DUE TO SLOPE. FINAL LOCATION AND ELEVATIONS TO BE DETERMINED BY THE ENGINEER BASED ON ACTUAL SLOPE CONDITIONS.
2. SEE LAYOUT SHEET FOR ACTUAL GROUPING LOCATIONS.
3. GROUPING SHAPES ARE TO BE STAKED AND LAID OUT TO GIVE A NATURAL APPEARANCE.
4. TYPICAL GROUPING LAYOUTS SHOWN ARE FOR FLAT AND STEEP SLOPES OF PROJECT WHERE THERE IS NO STONE FILL.
5. WATER ALL TREES AT TIME OF PLANTING. EACH TREE SHALL RECEIVE A MINIMUM OF 10 GALLONS OF WATER TWICE A WEEK.
6. FOLLOW STATE OF VERMONT AGENCY OF TRANSPORTATION STANDARD SPECIFICATIONS FOR CONSTRUCTION, SECTION 656.

TREE PLANTING LOCATIONS

STATION	OFFSET
271+69.00	56.35 FT (LT)
271+81.00	55.47 FT (LT)
271+92.00	54.66 FT (LT)
272+02.00	54.24 FT (LT)
272+13.00	54.19 FT (LT)
272+24.00	53.96 FT (LT)
272+35.00	54.56 FT (LT)
272+54.00	50.23 FT (LT)
273+01.00	47.16 FT (LT)

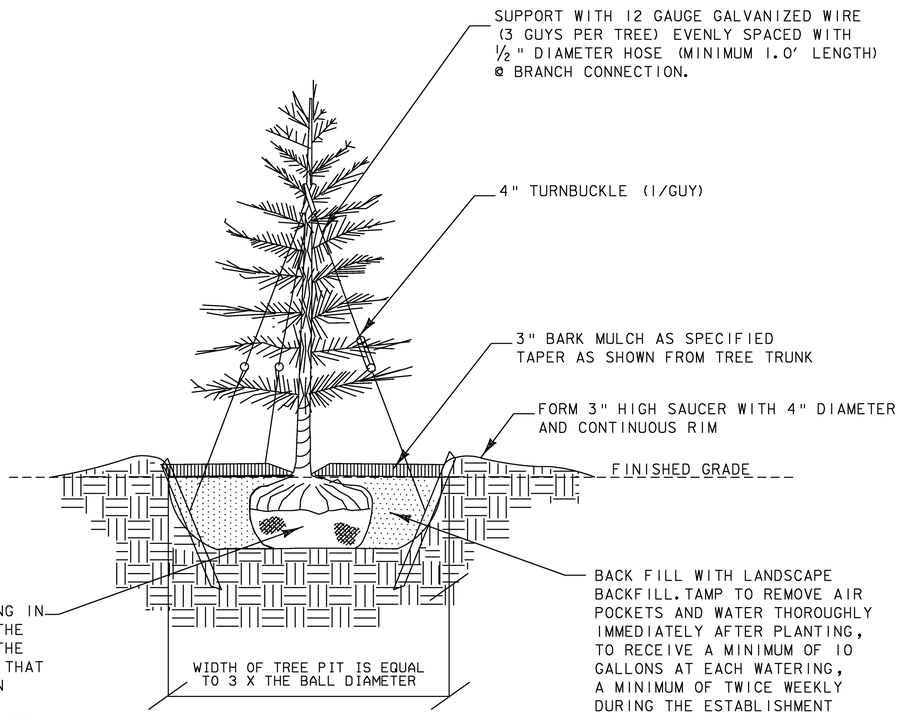

EVERGREEN TREE PLANTING DETAIL

NOTES:

1. ANTI-DESICCANT SPRAY IS TO BE APPLIED TO ALL EVERGREENS PER MANUFACTURER SPECIFICATIONS.

2. COMPLETELY REMOVE ALL GUY-WIRES AND TURNBUCKLES ONE YEAR AFTER PLANTING.

PLANT AND TREE LIST

QUANTITY	UNIT	KEY	BOTANICAL NAME	COMMON NAME	SIZE	SPACING	REMARKS	ITEM #
			EVERGREEN TREES					
9	EA	PS	PINUS STROBUS	WHITE PINE	5-6' MINIMUM HT	12' OC	B&B	656.20

NOT TO SCALE

LANDSCAPE TREE PLANTING DETAIL

PROJECT NAME: MORETOWN-MIDDLESEX
PROJECT NUMBER: BRS 0284(14)

FILE NAME: 78f219/structures/78f219frm.dgn
PROJECT LEADER: EVANS-MONGEON
DESIGNED BY: J. BROWN
IPARM: epsclspdet2.i

PLOT DATE: 15-JUN-2009
DRAWN BY: L. DUQUETTE
CHECKED BY: S.SCRIBNER
SHEET 35 OF 103

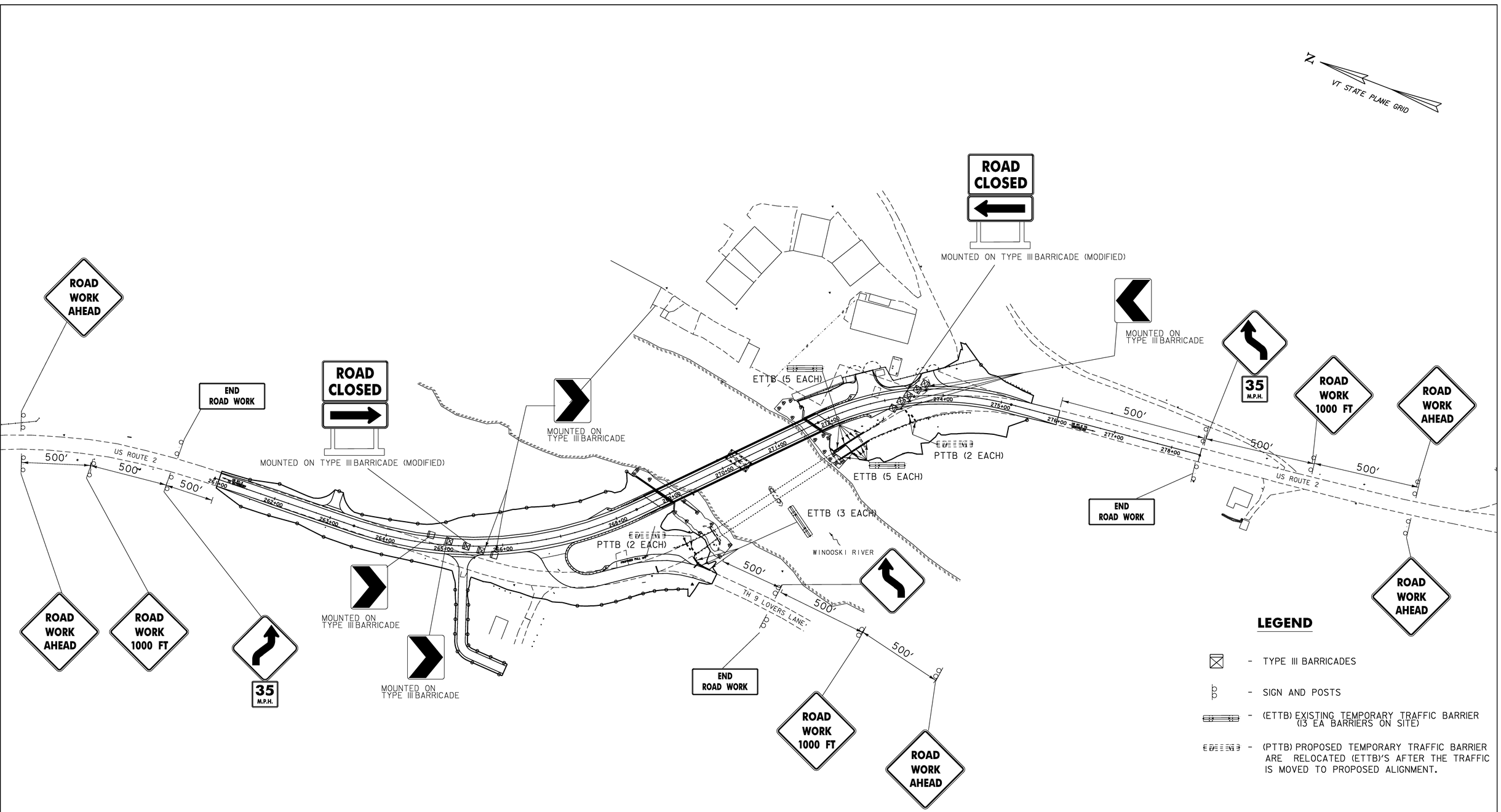

LEGEND

- TYPE III BARRICADES
- SIGN AND POSTS
- (ETTB) EXISTING TEMPORARY TRAFFIC BARRIER (13 EA BARRIERS ON SITE)
- (PTTB) PROPOSED TEMPORARY TRAFFIC BARRIER ARE RELOCATED (ETTB)'S AFTER THE TRAFFIC IS MOVED TO PROPOSED ALIGNMENT.

SCALE 1" = 75'-0

75 0 75

NOTE: ONCE TRAFFIC IS ON THE PROPOSED STRUCTURE, TYPE III BARRICADES AND "BRIDGE CLOSED" SIGNS SHALL BE PLACED IN FRONT OF THE (PTTB) BARRIERS.

TRAFFIC CONTROL SHEET

PROJECT NAME: MORETOWN-MIDDLESEX
PROJECT NUMBER: BRS 0284(14)

FILE NAME: /78f219/str/sf219tc.dgn
PROJECT LEADER: M. Evans-Mongeon
DESIGNED BY: G. ROKES
IPARM: s78f219tc.i

PLOT DATE: 15-JUN-2009
DRAWN BY: G. ROKES
CHECKED BY: S. SCRIBNER
SHEET 36 OF 103

EXISTING SIGNS

NEW SIGNS

ES = ERECT SALVAGED
N = NEW
R = REMOVE
RET = RETAIN
S = SALVAGE
R&S = REMOVE & SALVAGE



OFF ALIGNMENT

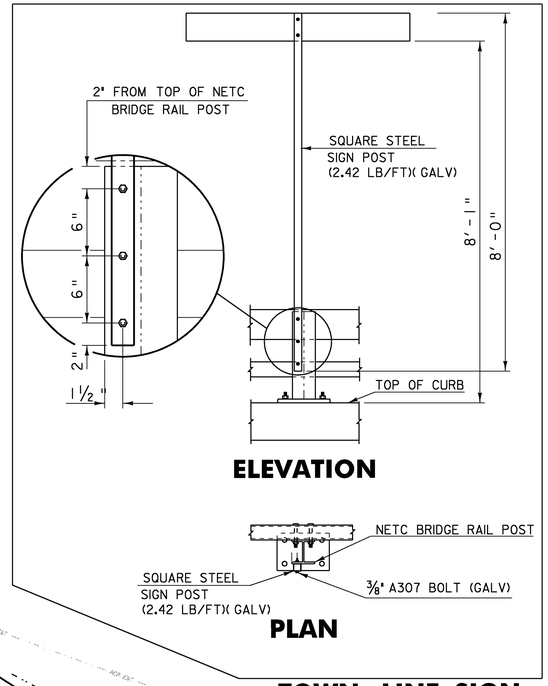

TOWN LINE SIGN MOUNTING DETAIL

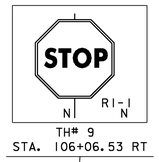

TH# 9
STA. 106+06.53 RT



TH# 9
STA. 106+25.00 RT

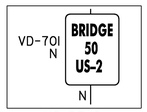

US RT 2
STA. 268+00.00 RT

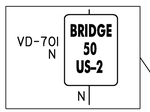

US RT 2
STA. 272+25.00 LT

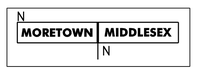

US RT 2
STA. 270+30.00 LT
SEE DETAIL THIS SHEET

4 INCH WHITE LINE
STA. 261+00.00 - 276+00.00 LT/RT

4 INCH YELLOW LINE
STA. 261+00.00 - 276+00.00 LT/RT

DURABLE 24 INCH STOP BAR
TH 9 STA. 106+28.75 - 106+30.75

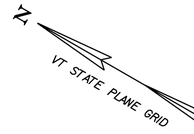

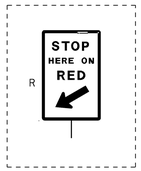

STA. 273+64.00 RT

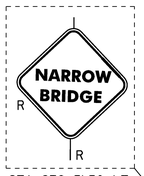

STA. 276+51.50 LT

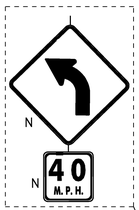

OFF ALIGNMENT



OFF ALIGNMENT

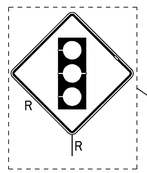

OFF ALIGNMENT



STA. 261+00.00 RT

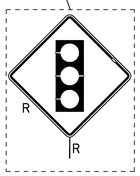

STA. 261+60.00 RT

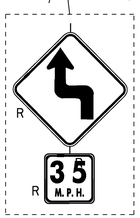

STA. 263+00.00 RT



STA. 264+70.00 RT

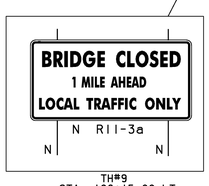

TH#9
STA. 106+15.00 LT

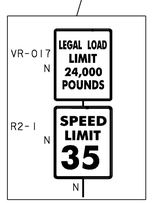

TH#9
STA. 105+75.00 LT

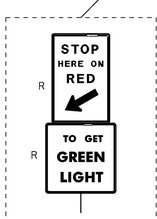

TH#9
STA. 104+15.00 LT

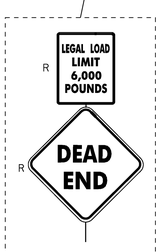

TH#9
STA. 103+50.00 LT

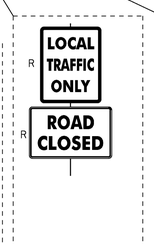

TH#9
STA. 103+50.00 LT



TH# 9
STA. 103+52.00 RT

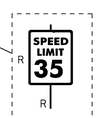

TH#9
STA. 103+50.00 LT

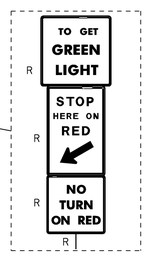

TH# 9
STA. 103+50.50 RT

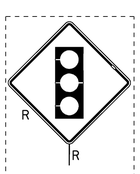

LOVERS LANE

SCALE 1" = 50'-0
50 0 50

TRAFFIC SIGN LAYOUT SHEET

PROJECT NAME:	MORETOWN-MIDDLESEX
PROJECT NUMBER:	BRS 0284(14)

FILE NAME: 78f219\structures\sf78f219tss.dg	PLOT DATE: 15-JUN-2009
PROJECT LEADER: M. Evans-Mongeon	DRAWN BY: G. ROKES
DESIGNED BY: G.ROKES	CHECKED BY: S. SCRIBNER
IPARM: s78f21913.1	SHEET 37 OF 103

STATE OF VERMONT
AGENCY OF TRANSPORTATION

TRAFFIC SIGN SUMMARY SHEET

MILEMARKER, STATION, OR SIGN NUMBER	SIGN LEGEND	SIGN DIMENSIONS			NEW & SALVAGED SIGNS				EXIST POST		NEW SIGN POSTS																						SIGN DETAIL	
		EA	WIDTH (in)	HEIGHT (in)	"A"	"B"	SALV SIGN	SALV TIS	RETAIN	SALVAGE	NO. OF POSTS	FLANGED CHANNEL lb/ft			SQUARE STEEL (in) lb/ft			ANCHOR	SLEEVE	TUBULAR ALUMINUM Ø (in) lb/ft			FOUNDATION	TUBULAR STEEL Ø (in) lb/ft				W-SHAPE STEEL FTG. SIZE		WEIGHT	POST SIZE	SIGN FRAME REQUIRED	REMARKS	DETAIL ON SHEET NUMBER	STD. SHEET NUMBER
															1.75	2.0	2.5			3.0	4.0	4.0 MOD						24"	30"					
												1.12	2.0	3.0	1.88	2.42	3.35			1.3	1.7	1.7		7.6	9.0	10.8	14.6							
											OPTION ITEMS																								
	US ROUTE 2																																	
261+00.00 RT		1	30	30	6.25						1					17		X	X														WI-2L		E-151
	40 M.P.H.	1	18	18	2.25																												WI3-1		E-155
268+00.00 RT	BRIDGE 50 US-2	1	6	8	.33						1				8			X	X														VD-701		E-134
270+30.00 LT	MORETOWN MIDDLESEX	1	60	7.5	3.10						1					8																	VD-024		E-124
272+25.00 LT	BRIDGE 50 US-2	1	6	8	0.33						1				8			X	X														VD-701		E-134
275+17.32 (PT) ADD 200' LT		1	30	30	6.25						1					17		X	X														WI-2L		E-151
	40 M.P.H.	1	18	18	2.25																												WI3-1		E-155
264+42 LT							1																												
	TH-9																																	
105+75.00 LT	LEGAL LOAD LIMIT 24,000 POUNDS	1	24	30	5.00						1					17		X	X														VR-017		E-141
	SPEED LIMIT 35	1	24	30	5.00																												R2-1		
106+06.53 RT	STOP	1	30	30	6.25						1					15		X	X														RI-1		E-143
106+15.00 LT	BRIDGE CLOSED 1 MILE AHEAD LOCAL TRAFFIC ONLY	1	60	30	12.50						2					15		X	X														RII-3a		
106+25.00 RT	TH 9						2 X			X																								
												FT	FT	FT	FT 16	FT 89	FT		EA 7	LB	LB	LB		LB	LB	LB	LB							
	TOTALS	SF 49.51	SF	EA. 3 X	SF							FT			FT 105					LB			EA.	LB				EA.	EA.	LB				

FINAL POST LENGTHS ARE TO BE DETERMINED IN THE FIELD. POST SIZES ARE COMPUTED BASED ON INFORMATION FURNISHED ON THE STANDARD SHEETS AND THE VTRANS "SIGN POST DESIGN GUIDELINE."

PROJECT NAME: MORETOWN-MIDDLESEX
PROJECT NUMBER: BRS 0284(14)

FILE NAME: 78f219\STR\sf78f219tss.dgn
PROJECT LEADER: M. EVANS-MONGEON
DESIGNED BY: G. ROKES
PLOT DATE: 15-JUN-2009
DRAWN BY: G. ROKES
CHECKED BY: S. SRCIBNER
SHEET 38 OF 103

POINT	STA. NO.	OFFSET	COORDINATES NORTHING	EASTING
5 HCTRL	- - -	- - -	58299.121	89264.129
6 HCTRL	- - -	- - -	58562.008	88881.265
9 HCTRL	- - -	- - -	58482.345	88968.863
10 HCTRL	- - -	- - -	58218.256	89299.903
101 HCTRL	- - -	- - -	58545.634	89035.956
B-1	268+78.00	20' LT.	58613.478	89020.567
B-2	268+97.50	22' RT.	58569.304	89009.048
B-3	270+22.00	16' LT.	58515.862	89123.695
B-4	270+36.00	22' RT.	58473.064	89110.723
B-5	271+82.00	28' LT.	58419.622	89225.370
B-6	271+80.00	20' RT.	58376.823	89212.397
PT	268+37.45	0	58626.827	88977.370
PC	271+80.03	0	58391.325	89226.171
BM 1000	NOT SHOWN	- -	59519.894	88726.558
BM 3768	NOT SHOWN	- -	57091.335	89553.532

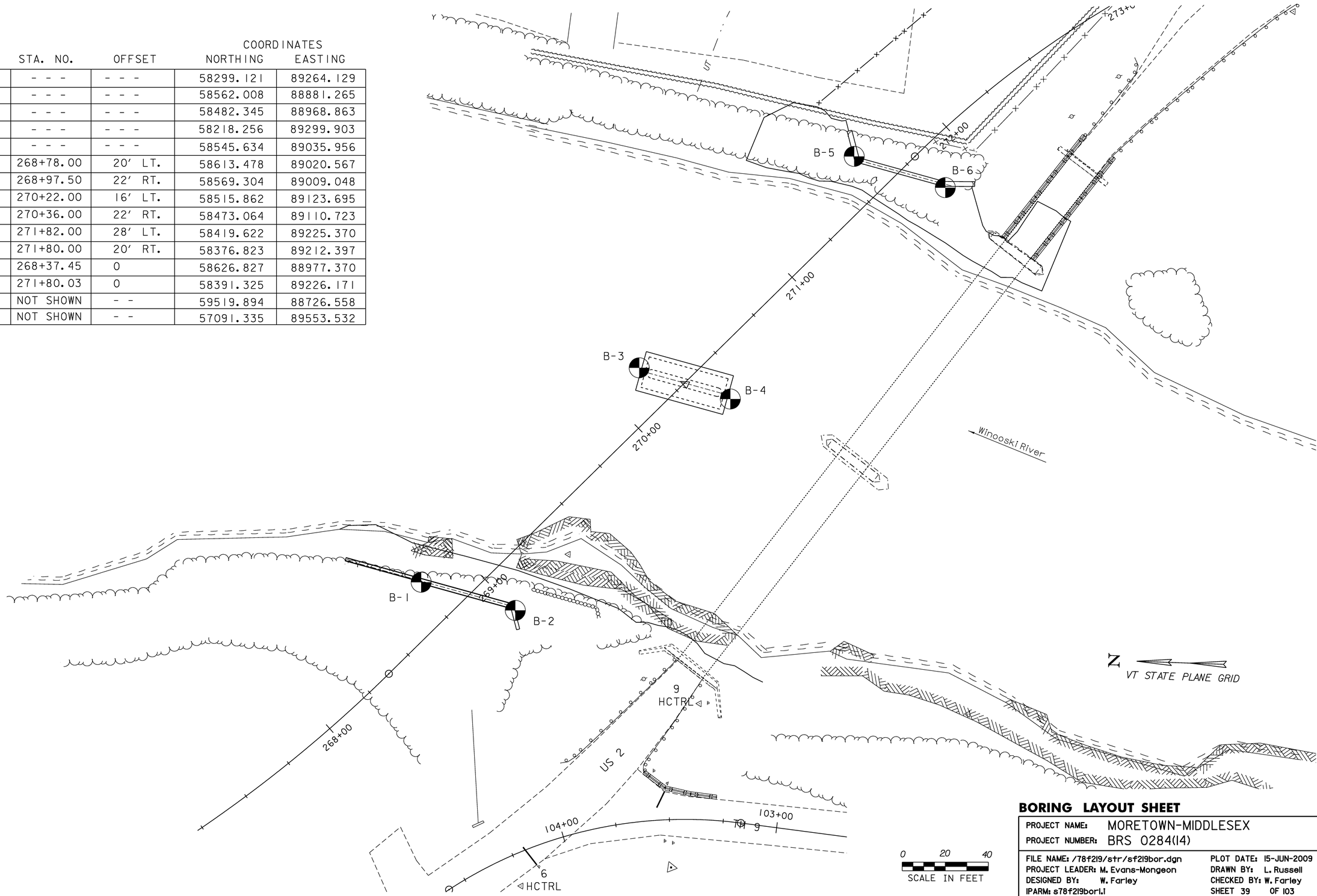

BORING LAYOUT SHEET

PROJECT NAME:	MORETOWN-MIDDLESEX
PROJECT NUMBER:	BRS 0284(14)

FILE NAME: /78f219/str/sf219bor.dgn	PLOT DATE: 15-JUN-2009
PROJECT LEADER: M. Evans-Mongeon	DRAWN BY: L. Russell
DESIGNED BY: W. Farley	CHECKED BY: W. Farley
IPARM: s78f219borl.i	SHEET 39 OF 103

STATE OF VERMONT
AGENCY OF TRANSPORTATION
MATERIALS & RESEARCH SECTION
SUBSURFACE INFORMATION

BORING NUMBER: B-1
SHEET 1 of 1
DATE STARTED: 8/22/03
DATE COMPLETED: 8/26/03

PROJECT NAME: MORETOWN-MIDDLESEX
SITE NAME: US Rt.2
STATION: 268+78.00
OFFSET: -20.00

PROJECT NUMBER: BRS 0284(14)
SITE NUMBER: BR-50
GROUND ELEVATION: 440.48
GROUNDWATER DEPTH: N/A

BORING CREW
CREW CHIEF: TALLMAN
DRILLER: TALLMAN
LOGGER: RUSSELL

BORING RIG: SMALL SKID RIG
BORING TYPE: WASH BORE
SAMPLE TYPE: SPLIT BARREL
CHECKED BY:

DEPTH (ft)	SYMBOL	CLASSIFICATION OF MATERIALS (Description)	BLOWS PER FOOT / RUN	M.C. (%) / REC (%)	GRAVEL (%) / RQD (%)	SAND (%) / Dip (deg)	FINES (%) / Drill Rate (ft/min)
		A-2-4, SiSa, gry, Dry, Rec. = 1.0 ft	2	11.5	0.0	76.2	23.8
ABUT. # 1 TOP FOOTING ELEV. = 438.0' 2.5		A-2-4, SiSa, gry, Dry, Rec. = 1.1 ft	5	10.7	0.0	74.7	25.3
		No Recovery, 4.0 ft - 4.5 ft	R	Top of Bedrock @ 4.5 ft			
5.0		Green, Chlorite schist Greenstone, with laminated quartz veins, Competent, Moderately hard, Unweathered, NXMDC, 4.5 ft - 7.5 ft, Rec. = 2.9 ft	1	97	50	80	
7.5		Green, Chlorite schist Greenstone, with laminated quartz veins, Moderately hard, Unweathered, NXMDC, 7.5 ft - 10.0 ft, Rec. = 2.1 ft	2	84	0	80	
10.0		Green, Chlorite schist Greenstone, with laminated quartz veins, Competent, Moderately hard, Unweathered, NXMDC, 10.0 ft - 15.0 ft, Rec. = 5.0 ft	3	100	95	80	
12.5							
15.0		Hole stopped @ 15.0 ft					
17.5		DRILLER'S NOTES: 1. No water found 08/26/03					

LOG OF BORING MORETOWN-MIDDLESEX,BRS0284(14).GPJ VT ACT.GDT 8/14/04

STATE OF VERMONT
AGENCY OF TRANSPORTATION
MATERIALS & RESEARCH SECTION
SUBSURFACE INFORMATION

BORING NUMBER: B-2
SHEET 1 of 1
DATE STARTED: 8/28/03
DATE COMPLETED: 9/02/03

PROJECT NAME: MORETOWN-MIDDLESEX
SITE NAME: US Rt.2
STATION: 268+97.50
OFFSET: 22.00

PROJECT NUMBER: BRS 0284(14)
SITE NUMBER: BR-50
GROUND ELEVATION: 450.10
GROUNDWATER DEPTH: 24.4 ft

BORING CREW
CREW CHIEF: TALLMAN
DRILLER: TALLMAN
LOGGER: RUSSELL

BORING RIG: SMALL SKID RIG
BORING TYPE: WASH BORE
SAMPLE TYPE: SPLIT BARREL
CHECKED BY:

DEPTH (ft)	SYMBOL	CLASSIFICATION OF MATERIALS (Description)	BLOWS PER FOOT / RUN	M.C. (%) / REC (%)	GRAVEL (%) / RQD (%)	SAND (%) / Dip (deg)	FINES (%) / Drill Rate (ft/min)
		A-1-b, GrSa, brn, Dry, Rec. = 0.4 ft	5	2.7	24.8	65.2	10.0
		A-1-b, GrSa, brn, Dry, Rec. = 0.7 ft	3	3.6	31.9	58.7	9.4
5		A-1-b, GrSa, brn, Dry, Rec. = 1.0 ft	3	2.3	39.7	52.5	7.8
		Visual Classification:Gr with Wood, gry, Moist, Rec. = 0.15 ft, 6.0 ft - 8.0 ft	5				
		A-1-a, SaGr with rock fragments, brn-gry, Moist, Rec. = 0.9 ft	8	11.0	60.0	31.9	8.1
10		A-4, SaSl, brn, Moist, Rec. = 0.7 ft	3	28.4	0.2	43.2	56.6
ABUT. # 1 TOP FOOTING ELEV. = 438.0'		No Recovery, 12.0 ft - 14.0 ft	12				
		A-2-4, SiSa, gry, Moist, Rec. = 0.8 ft	8	22.6	0.4	65.6	34.0
15				Top of Bedrock @ 17.0 ft			
		Green, Chlorite schist Greenstone, with laminated quartz veins, Poor RQD due to near vertical joint throughout core run, Moderately hard, Unweathered, NXMDC, 17.0 ft - 20.0 ft, Rec. = 2.1 ft	1	70	0	80	
20		Green, Chlorite schist Greenstone, with laminated quartz veins, Competent, Moderately hard, Unweathered, NXMDC, 20.0 ft - 23.0 ft, Rec. = 2.9 ft	2	97	75	80	
		Green, Chlorite schist Greenstone, with laminated quartz veins, Competent, Moderately hard, Unweathered, NXMDC, 23.0 ft - 28.0 ft, Rec. = 4.9 ft	3	98	90	80	
25		Hole stopped @ 28.0 ft					

LOG OF BORING MORETOWN-MIDDLESEX,BRS0284(14).GPJ VT ACT.GDT 8/14/04

STATE OF VERMONT
AGENCY OF TRANSPORTATION
MATERIALS & RESEARCH SECTION
SUBSURFACE INFORMATION

BORING NUMBER: B-3
SHEET 1 of 1
DATE STARTED: 9/13/04
DATE COMPLETED: 9/15/04

PROJECT NAME: MORETOWN-MIDDLESEX
SITE NAME: US Rt.2
STATION: 270+22
OFFSET: -16.00

PROJECT NUMBER: BRS 0284(14)
SITE NUMBER: BR-50
GROUND ELEVATION: 428.92 ft
GROUNDWATER DEPTH: N/A

BORING CREW
CREW CHIEF: TALLMAN
DRILLER: TALLMAN
LOGGER: RUSSELL

BORING RIG: LARGE SKID RIG ON RAFT
BORING TYPE: WASH BORE
SAMPLE TYPE: SPLIT BARREL
CHECKED BY: DLG

DEPTH (ft)	SYMBOL	CLASSIFICATION OF MATERIALS (Description)	BLOWS PER FOOT / RUN	M.C. (%) / REC (%)	GRAVEL (%) / RQD (%)	SAND (%) / Dip (deg)	FINES (%) / Drill Rate (ft/min)
		No Recovery, Boulders & Cobbles, 0.0 ft - 2.0 ft	R				
		No Recovery, Boulders & Cobbles, 2.0 ft - 4.0 ft	R				
5		A-3, Sa, brn, Moist, Rec. = 0.3 ft	17	19.3	9.2	82.1	8.7
PIER BOT. FOOTING ELEV. = 422.5'		A-1-b, SaGr, brn, Moist, Rec. = 1.1 ft	35	11.7	46.3	42.8	10.9
		A-1-b, SaGr, brn, Moist, Rec. = 1.1 ft	17	11.5	47.1	41.2	11.7
10		A-1-b, GrSa, brn, Moist, Rec. = 1.4 ft	31	15.2	23.1	62.3	14.6
		A-1-b, GrSa, brn, Moist, Rec. = 1.2 ft	12	16.1	24.3	65.5	10.2
15		A-3, Sa, gry, Moist, Rec. = 0.9 ft	10	20.9	1.4	88.7	9.9
20		A-3, GrSa, gry, Moist, Rec. = 1.0 ft	12	15.5	20.3	71.8	7.9
25		A-2-4, SiSa, gry, Moist, Rec. = 0.8 ft	8	22.5	8.0	63.4	28.6
30		A-4, SiSa, gry, MTW, Rec. = 1.5 ft	13	29.4	3.4	59.0	37.6
		Top of Bedrock @ 31.5 ft					
EST. PILE TIP ELEV. = 395.0'		Green, Chlorite schist Greenstone, with laminated quartz veins, Competent, Moderately hard, Unweathered, NXMDC, 31.5 ft - 36.5 ft, Rec. = 4.9 ft	1	98	95	80	
35		Green, Chlorite schist Greenstone, with laminated quartz veins, Competent, Moderately hard, Unweathered, NXMDC, 36.5 ft - 41.5 ft, Rec. = 5.0 ft	2	100	98	80	
40		Hole stopped @ 41.5 ft					
45							

LOG OF BORING MORETOWN-MIDDLESEX,BRS0284(14).GPJ VT ACT.GDT 8/14/04

BORING LOG SHEET 1

PROJECT NAME: MORETOWN - MIDDLESEX
PROJECT NUMBER: BRS0284(14)

FILE NAME: 78f219\str\sf219bor1.dgn
PROJECT LEADER: M. Evans-Mongeon
DESIGNED BY: L. Russell
IPARM: s78f219bor2.i

PLOT DATE: 15-JUN-2009
DRAWN BY: L. Russell
CHECKED BY: W. Farley
SHEET 40 OF 103

STATE OF VERMONT
AGENCY OF TRANSPORTATION
MATERIALS & RESEARCH SECTION
SUBSURFACE INFORMATION

BORING NUMBER: B-4
SHEET 1 of 1
DATE STARTED: 8/26/04
DATE COMPLETED: 9/02/04

PROJECT NAME: MORETOWN-MIDDLESEX
SITE NAME: US Rt.2
STATION: 270+36
OFFSET: 22.00

PROJECT NUMBER: BRS 0284(14)
SITE NUMBER: BR-50
GROUND ELEVATION: 427.53 ft
GROUNDWATER DEPTH: N/A

BORING CREW
CREW CHIEF: RUSSELL
DRILLER: RUSSELL
LOGGER: TALLMAN

BORING RIG: LARGE SKID RIG ON RAFT
BORING TYPE: WASH BORE
SAMPLE TYPE: SPLIT BARREL
CHECKED BY: DLG

DEPTH (ft)	SYMBOL	CLASSIFICATION OF MATERIALS (Description)	BLOWS PER FOOT / RUN	M.C. (%) / REC (%)	GRAVEL (%) / RQD (%)	SAND (%) / Dip (deg)	FINES (%) / Drill Rate (ft/min)
		A-1-b, Sa, brn, Sat, Rec. = 1.0 ft	1	24.6	1.3	95.4	3.3
		A-1-b, GrSa, gry, Sat, Rec. = 0.81 ft	2	17.6	37.1	59.1	3.8
5		A-1-a, SaGr, gry, Sat, Rec. = 0.4 ft	14	12.8	54.5	38.9	6.6
		Visual Classification: A-1-a, Sa Gr, gry, Sat, Rec. = 0.3 ft, 6.0 ft - 8.0 ft, Insufficient sample for testing.	12				
		No Recovery, 8.0 ft - 10.0 ft	13				
10		Visual Classification: A-1-b, Gr Sa, brn, Sat, Rec. = 0.2 ft, 10.0 ft - 12.0 ft, Insufficient sample for testing.	13				
		A-1-b, GrSa, brn, Sat, Rec. = 1.2 ft	40	11.6	42.2	48.7	9.1
15		A-3, Sa, brn, Moist, Rec. = 1.3 ft	16	17.1	19.4	72.7	7.9
20		A-3, Sa, gry, Moist, Rec. = 0.9 ft	10	18.2	16.8	75.2	8.0
25		A-2-4, Sa, gry, Moist, Rec. = 0.7 ft	2	22.5	5.8	80.6	13.6
30		A-2-4, SiSa, gry, Moist, Rec. = 1.3 ft	5	24.9	0.0	74.5	25.5
35		A-2-4, SiSa, gry, Wet, Rec. = 0.4 ft	R	30.1	3.9	68.1	28.0
		Top of Bedrock @ 35.4 ft					
		Green, Greenstone, with laminated quartz veins, Competent, Moderately hard, Unweathered, NXMDC, 35.4 ft - 40.4 ft, Rec. = 4.8 ft	1	96	86	80	
40		Green, Greenstone, with laminated quartz veins, Competent, Moderately hard, Unweathered, NXMDC, 40.4 ft - 45.4 ft, Rec. = 5.0 ft	2	100	80	80	
45		Hole stopped @ 45.4 ft					

PIER
BOT. FOOTING
ELEV. = 422.5'

EST. PILE
TIP ELEV. =
395.0'

LOG OF BORING MORETOWN-MIDDLESEX BRS0284(14)SF3 I:\7-ACT\DOT 10/21/04

STATE OF VERMONT
AGENCY OF TRANSPORTATION
MATERIALS & RESEARCH SECTION
SUBSURFACE INFORMATION

BORING NUMBER: B-5
SHEET 1 of 2
DATE STARTED: 9/18/03
DATE COMPLETED: 9/26/03

PROJECT NAME: MORETOWN-MIDDLESEX
SITE NAME: US Rt.2
STATION: 271+82.00
OFFSET: -28.00

PROJECT NUMBER: BRS 0284(14)
SITE NUMBER: BR-50
GROUND ELEVATION: 453.45
GROUNDWATER DEPTH: 22.0 ft 9/26/03

BORING CREW
CREW CHIEF: TALLMAN
DRILLER: TALLMAN
LOGGER: RUSSELL

BORING RIG: LARGE SKID RIG
BORING TYPE: WASH BORE
SAMPLE TYPE: SPLIT BARREL
CHECKED BY:

DEPTH (ft)	SYMBOL	CLASSIFICATION OF MATERIALS (Description)	BLOWS PER FOOT / RUN	M.C. (%) / REC (%)	GRAVEL (%) / RQD (%)	SAND (%) / Dip (deg)	FINES (%) / Drill Rate (ft/min)
		A-1-b, GrSa, gry, Moist, Rec. = 0.6 ft	5	9.8	30.9	53.6	15.5
10		A-1-b, GrSa, gry, Moist, Rec. = 0.8 ft	6	13.6	38.7	51.3	10.0
		A-4, Si, gry, Moist, Rec. = 0.3 ft	8	40.4	3.6	6.1	90.3
		A-1-b, GrSa, gry, Moist, Rec. = 0.8 ft		8.8	39.9	48.5	11.6
20		BXDC, Cleaned out casing, 19.25 ft - 20.0 ft					
		A-2-4, Sa, gry-brn, Moist, Rec. = 1.0 ft	16	15.5	0.6	83.9	15.5
		A-1-b, SaGr, brn-gry, Moist, Rec. = 0.6 ft, Started using drillers mud	38	12.6	52.7	30.4	16.9
30		A-1-a, SaGr, brn, Moist, Rec. = 1.1 ft, Sample appears to be more orange in color	18	11.9	58.7	28.0	13.3
		A-4, SaSi, gry, Moist, Rec. = 0.7 ft	17	23.7	6.8	38.2	55.0
40		BXDC, Cleaned out casing, 39.5 ft - 40.0 ft					
		A-1-a, SaGr, gry, Moist, Rec. = 0.4 ft	9	9.0	73.6	20.3	6.1
		A-2-4, Sa, gry, Moist, Rec. = 1.0 ft	15	21.0	0.1	89.1	10.8
50		A-2-4, SiSa, gry, Moist, Rec. = 0.5 ft, Couldn't advance casing, Pulled casing and noticed bit was bad, Replaced with a sawtooth bit and went back down	21	26.1	0.0	73.7	26.3

ABUT. # 2
BOT. FOOTING
ELEV. = 430.5'

LOG OF BORING MORETOWN-MIDDLESEX BRS0284(14)SF3 I:\7-ACT\DOT 9/14/04

STATE OF VERMONT
AGENCY OF TRANSPORTATION
MATERIALS & RESEARCH SECTION
SUBSURFACE INFORMATION

BORING NUMBER: B-5
SHEET 2 of 2
DATE STARTED: 9/18/03
DATE COMPLETED: 9/26/03

PROJECT NAME: MORETOWN-MIDDLESEX
SITE NAME: US Rt.2
STATION: 271+82.00
OFFSET: -28.00

PROJECT NUMBER: BRS 0284(14)
SITE NUMBER: BR-50
GROUND ELEVATION: 453.45
GROUNDWATER DEPTH: 22.0 ft 9/26/03

BORING CREW
CREW CHIEF: TALLMAN
DRILLER: TALLMAN
LOGGER: RUSSELL

BORING RIG: LARGE SKID RIG
BORING TYPE: WASH BORE
SAMPLE TYPE: SPLIT BARREL
CHECKED BY:

DEPTH (ft)	SYMBOL	CLASSIFICATION OF MATERIALS (Description)	BLOWS PER FOOT / RUN	M.C. (%) / REC (%)	GRAVEL (%) / RQD (%)	SAND (%) / Dip (deg)	FINES (%) / Drill Rate (ft/min)
		No Sample, Into flowing sand, Difficult drilling, Plugged up, 55.0 ft - 57.0 ft					
60		A-1-b, GrSa, gry, Moist, Rec. = 1.1 ft	25	10.6	41.6	46.1	12.3
		BXDC, Boulder, No sample, 63.0 ft - 64.0 ft, Will sample in ten foot intervals because of difficulty drilling					
70		A-2-4, Sa, gry, Moist, Rec. = 0.3 ft	17	18.0	11.1	73.9	15.0
80		A-1-b, GrSa, gry, Moist, Rec. = 0.8 ft	21	13.2	43.5	47.0	9.5
90		A-3, Sa, gry, Moist, Rec. = 1.2 ft, Tried to advance casing, but could not, Plugged up, Had to pull 15.0 feet back off to unplug	25	17.0	9.0	82.0	9.0
		Top of Bedrock @ 94.0 ft					
		Green, Chlorite schist Greenstone, with laminated quartz veins, Competent, Moderately hard, Unweathered, BXDC, 94.0 ft - 99.0 ft, Rec. = 4.8 ft	1	96	85	87	
100		Green, Chlorite schist Greenstone, with laminated quartz veins, Competent, Moderately hard, Unweathered, BXDC, 99.0 ft - 104.0 ft, Rec. = 5.0 ft	2	100	90	87	
		Hole stopped @ 104.0 ft					

EST. PILE
TIP ELEV. =
359.0'

LOG OF BORING MORETOWN-MIDDLESEX BRS0284(14)SF3 I:\7-ACT\DOT 9/14/04

BORING LOG SHEET 2

PROJECT NAME: MORETOWN - MIDDLESEX
PROJECT NUMBER: BRS0284(14)

FILE NAME: 78f219\str\sf219bor1.dgn
PROJECT LEADER: M. Evans-Mongeon
DESIGNED BY: W. Farley
IPARM: s78f219bor3.i

PLOT DATE: 15-JUN-2009
DRAWN BY: L. Russell
CHECKED BY: L. Russell
SHEET 41 OF 103

STATE OF VERMONT
AGENCY OF TRANSPORTATION
MATERIALS & RESEARCH SECTION
SUBSURFACE INFORMATION

BORING NUMBER: B-6
SHEET 1 of 2
DATE STARTED: 9/09/03
DATE COMPLETED: 10/03/03

PROJECT NAME: MORETOWN-MIDDLESEX
SITE NAME: US Rt.2
STATION: 271+80.00
OFFSET: 20.00

PROJECT NUMBER: BRS 0284(14)
SITE NUMBER: BR-50
GROUND ELEVATION: 443.13
GROUNDWATER DEPTH: 12.0 ft 10/03/03

BORING CREW
CREW CHIEF: TALLMAN
DRILLER: TALLMAN
LOGGER: RUSSELL

BORING RIG: SMALL SKID RIG/LAG TRACK RIG
BORING TYPE: WASH BORE
SAMPLE TYPE: SPLIT BARREL
CHECKED BY:

DEPTH (ft)	SYMBOL	CLASSIFICATION OF MATERIALS (Description)	BLOWS PER FOOT	M.C. (%)	GRAVEL (%)	SAND (%)	FINES (%)
		A-2-4, Sa, brn, Moist, Rec. = 1.15 ft	8	15.5	1.5	79.9	18.6
10		A-3, Sa, brn, Moist, Rec. = 0.3 ft	5	20.1	4.1	91.9	4.0
		A-2-4, SlSaGr, brn, Moist, Rec. = 0.6 ft	11	21.7	40.8	33.4	25.8
20		No Sample, Boulders, 19.0 ft - 21.0 ft, Cleaned out casing					
		A-2-4, GrSa, brn, Moist, Rec. = 0.8 ft	48	16.1	25.9	58.3	15.8
		A-1-b, SaGr, gry, Moist, Rec. = 0.7 ft		9.6	51.6	31.2	17.2
30		BXDC, Cleaned out casing, 29.5 ft - 30.0 ft	41	10.2	57.2	29.3	13.5
		A-1-b, SaGr, gry, Moist, Rec. = 1.2 ft					
		A-1-a, SaGr, gry, Moist, Rec. = 1.0 ft, Flowing sand in casing back to 33 feet, Had to wash material back out	57	9.2	63.5	27.2	9.3
40		A-3, Sa, gry, Moist, Rec. = 1.0 ft, Flowing sand in casing, Had to wash material back out	9	25.0	0.5	93.5	6.0
		A-4, SaSi, gry, Moist, Rec. = 1.1 ft	15	21.1	7.7	40.9	51.4
50		No Sample, Into flowing sand, 50.0 ft - 55.0 ft, Plugged up with sand, Tried to wash out, Used drillers mud					

ABUT. # 2
BOT. FOOTING
ELEV. = 430.5'

EST. PILE
TIP ELEV. =
359.0'

LOG OF BORING MORETOWN-MIDDLESEX BRS0284(14) (SR) VT ACOT GST 9/14/04

STATE OF VERMONT
AGENCY OF TRANSPORTATION
MATERIALS & RESEARCH SECTION
SUBSURFACE INFORMATION

BORING NUMBER: B-6
SHEET 2 of 2
DATE STARTED: 9/09/03
DATE COMPLETED: 10/03/03

PROJECT NAME: MORETOWN-MIDDLESEX
SITE NAME: US Rt.2
STATION: 271+80.00
OFFSET: 20.00

PROJECT NUMBER: BRS 0284(14)
SITE NUMBER: BR-50
GROUND ELEVATION: 443.13
GROUNDWATER DEPTH: 12.0 ft 10/03/03

BORING CREW
CREW CHIEF: TALLMAN
DRILLER: TALLMAN
LOGGER: RUSSELL

BORING RIG: SMALL SKID RIG/LAG TRACK RIG
BORING TYPE: WASH BORE
SAMPLE TYPE: SPLIT BARREL
CHECKED BY:

DEPTH (ft)	SYMBOL	CLASSIFICATION OF MATERIALS (Description)	BLOWS PER FOOT / RUN	M.C. (%) / REC (%)	GRAVEL (%) / RQD (%)	SAND (%) / Dip (deg)	FINES (%) / Drill Rate (ft/min)
		Still in Sandy material, No Rec., 55.0 ft - 57.0 ft	20				
60		A-1-a, SaGr, gry, Moist, Rec. = 0.3 ft, Casing plugged after sampling, Had to take five feet off to unplug	37	9.2	64.6	30.1	5.3
		A-1-b, GrSa, gry, Moist, Rec. = 1.1 ft, Had a hard time going to 70 feet, Used two pails of mud	25	13.5	20.3	70.1	9.6
70		A-1-b, Sa, gry, Moist, Rec. = 1.0 ft, Removed Small Skid Rig from hole and replaced with Lag Track Rig	50	15.9	0.0	88.9	11.1
		A-1-a, SaGr, gry, Moist, Rec. = 0.7 ft	21	10.6	61.5	33.6	4.9
80		A-3, Sa, gry, Moist, Rec. = 0.5 ft, Plugged up, Had to pull five feet of casing back to unplug	23	27.7	0.2	96.3	3.5
		BXDC, Cleaned out casing, 83.0 ft - 84.0 ft			Top of Bedrock @ 84.0 ft		
		Green, Chlorite schist Greenstone, with laminated quartz veins, Competent, Moderately hard, Unweathered, BXDC, 84.0 ft - 88.0 ft, Rec. = 3.3 ft	1	83	65	80	
90		Green, Chlorite schist Greenstone, with laminated quartz veins, Equipment problems resulted in loss of core run in hole, Moderately hard, Unweathered, BXDC, 88.0 ft - 93.0 ft, Rec. = 1.2 ft	2	24	24	80	
		Green, Chlorite schist Greenstone, with laminated quartz veins, Equipment problems resulted in loss of core run in hole, Moderately hard, Unweathered, BXDC, 93.0 ft - 98.0 ft, Rec. = 2.0 ft	3	40	40	80	
		Hole stopped @ 98.0 ft					
100		DRILLER'S NOTES: 1. Removed Small Skid Rig at 72.0'and used the Lag Track Rig to finish drilling this hole.					

LOG OF BORING MORETOWN-MIDDLESEX BRS0284(14) (SR) VT ACOT GST 9/14/04

BORING LOG SHEET 3

PROJECT NAME: MORETOWN - MIDDLESEX
PROJECT NUMBER: BRS0284(14)

FILE NAME: 78f219\str\sf219borl.dgn
PROJECT LEADER: M. Evans-Mongeon
DESIGNED BY: L. Russell
IPARM: s78f219bor4.i

PLOT DATE: 15-JUN-2009
DRAWN BY: L. Russell
CHECKED BY: W. Farley
SHEET 42 OF 103

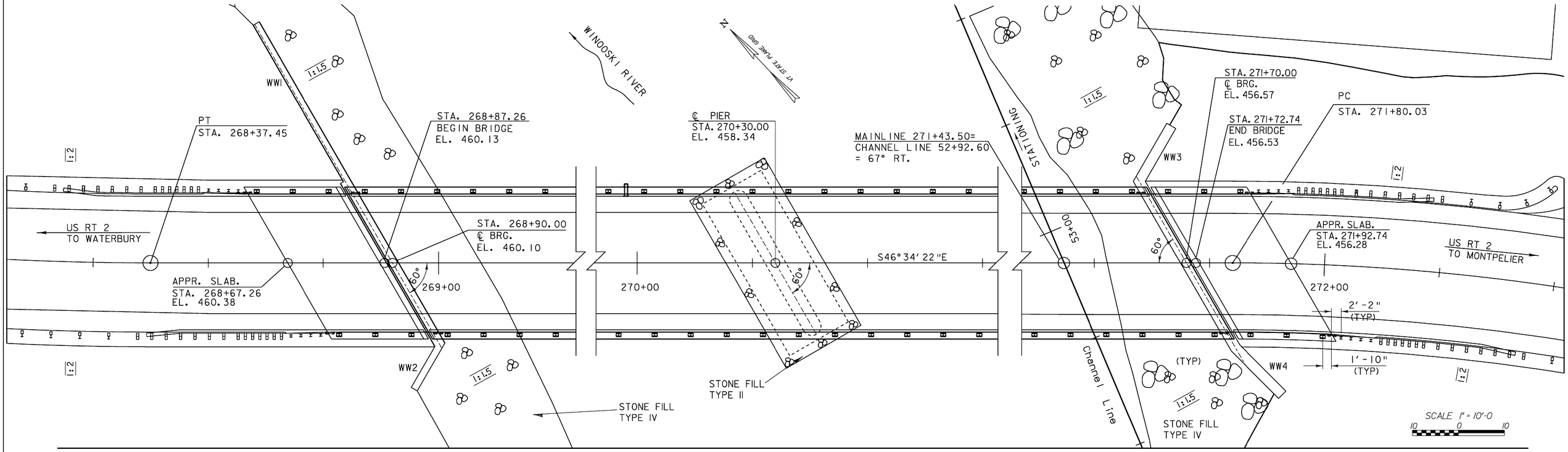

PLAN

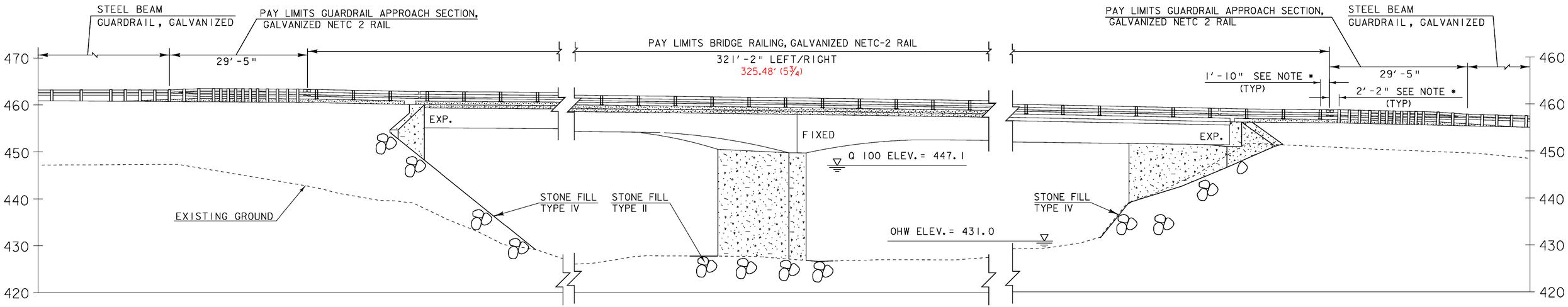

ELEVATION

SCALE 1" = 10'-0
10 0 10

NOTE * SEE BRIDGE RAILING DETAILS SHEET #72

PLAN AND ELEVATION SHEET

PROJECT NAME: MORETOWN-MIDDLESEX
PROJECT NUMBER: BRS 0284(14)

FILE NAME: /78f219/str/sf219pe.dgn
PROJECT LEADER: M. Evans-Mongeon
DESIGNED BY: S. Scribner
IPARM: s78f219pe.i

PLOT DATE: 15-JUN-2009
DRAWN BY: G.Rokes
CHECKED BY: S. Scribner
SHEET 43 OF 103

GENERAL

1. ALL MATERIALS AND CONSTRUCTION SHALL CONFORM TO THE STATE OF VERMONT AGENCY OF TRANSPORTATION STANDARD SPECIFICATIONS FOR CONSTRUCTION DATED 2006, AND ITS LATEST REVISIONS, AND THE AASHTO LRFD BRIDGE DESIGN SPECIFICATIONS, DATED 2006, AND ITS LATEST REVISIONS.

2. DURING CONSTRUCTION, TRAFFIC SHALL BE MAINTAINED ON A ONE-WAY TEMPORARY BRIDGE CONSTRUCTED UPSTREAM OF THE PROPOSED STRUCTURE. THE TEMPORARY BRIDGE IS ALREADY IN PLACE. MAINTENANCE OF THE TEMPORARY BRIDGE AND ITS APPROACHES SHALL BE PAID FOR UNDER ITEM 527.10, MAINTENANCE OF STRUCTURES AND APPROACHES. REMOVAL OF THE EXISTING APPROACH SPAN, TEMPORARY BRIDGE AND SUBSTRUCTURE UNITS WILL BE PAID FOR UNDER 529.15, REMOVAL OF STRUCTURE. REMOVAL OF STRUCTURE SHALL INCLUDE PIER #1 ABOVE ELEVATION 429.0', PIER #2 ABOVE ELEVATION 433.0', ABUTMENT #1 ABOVE ELEVATION 436.0 AND ABUTMENT #2 ABOVE ELEVATION 442.0', OR AS DIRECTED BY THE RESIDENT ENGINEER.

3. THE COST OF RELOCATING THE EXISTING TRAFFIC BARRIER AS SHOWN ON THE TRAFFIC CONTROL SHEET WILL BE PAID FOR UNDER ITEM 900.645 SPECIAL PROVISION (TRAFFIC CONTROL, ALL-INCLUSIVE).

4. THE CONTRACTOR SHALL ERECT AND MAINTAIN ALL TEMPORARY ON AND OFF-PROJECT SIGNS AND BARRICADES AS SHOWN IN THE PLANS AND AS DIRECTED BY THE RESIDENT ENGINEER. PAYMENT FOR THIS WORK WILL BE INCLUDED IN THE UNIT PRICE BID FOR ITEM 900.645, SPECIAL PROVISION (TRAFFIC CONTROL, ALL-INCLUSIVE).

5. FULL ACCESS TO ALL SIDE ROADS AND DRIVES WITHIN THE PROJECT LIMITS SHALL BE MAINTAINED AT ALL TIMES. THIS WORK WILL BE INCLUDED IN THE UNIT PRICE BID FOR ITEM 900.645, SPECIAL PROVISION (TRAFFIC CONTROL, ALL-INCLUSIVE).

6. FOR INFORMATION REGARDING UTILITIES, SEE THE SPECIAL PROVISIONS.

7. ALL DIMENSIONS SHOWN IN THE PLANS ARE HORIZONTAL OR VERTICAL AND ARE GIVEN AT 68 DEGREES FAHRENHEIT, UNLESS NOTED OTHERWISE.

8. ALL EXISTING SIGNS AND SIGN POSTS NOT RE-USED SHALL REMAIN THE PROPERTY OF THE STATE OF VERMONT. THE CONTRACTOR SHALL STOCKPILE THESE ITEMS AT THE PROJECT SITE FOR REMOVAL BY DISTRICT FORCES. THE CONTRACTOR SHALL CONTACT DOUG NEWTON AT TRANSPORTATION DISTRICT #6 @ 828-2689 WHEN THESE ITEMS ARE READY FOR REMOVAL FROM THE PROJECT SITE.

EARTHWORK AND RELATED ITEMS

9. TEMPORARY CONSTRUCTION FILLS WITHIN THE WATERCOURSE FOR ANY PURPOSE SHALL CONSIST OF CLEAN STONE FILL ONLY. NO OTHER FILLING IN THE STREAM SHALL OCCUR WITHOUT THE APPROVAL OF THE STREAM ALTERATION ENGINEER.

10. THE COST OF THE TEMPORARY CAUSEWAY FOR CONSTRUCTION OF THE PROPOSED PIER WILL BE INCLUDED IN THE UNIT PRICES BID FOR ITEM 208.40, COFFERDAM (271+30). THE COST OF THE TEMPORARY CAUSEWAY FOR REMOVAL OF THE EXISTING PIER WILL BE INCLUDED IN THE UNIT PRICE BID FOR ITEM 529.15, REMOVAL OF STRUCTURE.

11. THE "STONE FILL, TYPE II AND IV" UNDER THE BRIDGE AS SHOWN IN THE PLANS SHALL BE PLACED BEFORE THE NEW STEEL GIRDERS ARE SET.

12. THE HEIGHT OF FILL BEHIND ABUTMENTS WILL BE LIMITED TO THE BRIDGE SEAT ELEVATION UNTIL THE DECK HAS BEEN POURED AND THE CURING PERIOD IS UP.

13. "STONE FILL, TYPE I" SHALL BE USED FOR EROSION CONTROL AS SHOWN IN THE PLANS AND AT THE DISCRETION OF THE RESIDENT ENGINEER. PAYMENT FOR MATERIAL AND PLACEMENT SHALL BE MADE UNDER ITEM 613.10, "STONE FILL, TYPE I".

14. THE CONTRACTOR MAY SUBSTITUTE SUBBASE MATERIAL FOR THE SAND BORROW SHOWN ON THE PLANS. THE SUBBASE MATERIAL SHALL BE THE TYPE SPECIFIED IN THE CONTRACT AND SHALL BE PLACED TO MEET THE SUBBASE SPECIFICATIONS. IF SUBBASE IS PLACED IN LIEU OF SAND BORROW, A GEOTEXTILE MEETING THE REQUIREMENTS OF ITEM 649.11 "GEOTEXTILE FOR ROAD BED SEPARATOR" SHALL BE PLACED BETWEEN THE SUBGRADE AND THE SUBBASE MATERIAL. ALL COSTS ASSOCIATED WITH THE SUBSTITUTION INCLUDING THE GEOTEXTILE SHALL BE INCIDENTAL TO 203.31 "SAND BORROW".

15. THE CONTRACTOR'S ATTENTION IS DIRECTED TO SUBSECTION 301.06 REGARDING THE COMPACTION OF SUBBASE MATERIAL FOR THIS PROJECT.

16. THE EXISTING ROAD BED CONSISTS OF 7" DEEP CONCRETE SLABS. THESE CONCRETE SLABS AND THE PAVEMENT ON TOP OF THEM WILL BE REMOVED WHERE THEY INTERFERE WITH THE LIMITS OF COMMON EXCAVATION. PAYMENT FOR THIS WORK SHALL BE PAID FOR UNDER ITEM 203.16 "SOLID ROCK EXCAVATION". SEE DETAIL ON TYPICAL SECTIONS SHEET 3 FOR SOLID ROCK EXCAVATION PAY LIMITS.

SUBSTRUCTURES ON BEDROCK

17. FOOTINGS OR SUBFOOTINGS FOR SUBSTRUCTURES FOUNDED ON BEDROCK SHALL BE PLACED ON CLEAN COMPETENT ROCK. ALL LOOSE ROCK AND DEBRIS SHALL BE REMOVED.

18. UPON COMPLETION OF THE EXCAVATION FOR SUBSTRUCTURES FOUNDED ON BEDROCK AND PRIOR TO PLACING FORMWORK, THE RESIDENT ENGINEER SHALL CONTACT THE VTRANS SOILS AND FOUNDATION ENGINEER TO INSPECT THE BEDROCK. THE STRUCTURES ENGINEER WILL ALSO BE NOTIFIED THAT THE BEDROCK IS READY FOR INSPECTION. THE SOILS AND FOUNDATION ENGINEER WILL DETERMINE IF THE BEDROCK IS COMPETENT TO OBTAIN THE NOMINAL BEARING RESISTANCE AS SHOWN ON THE PLANS. FIVE (5) WORKING DAYS FROM NOTIFICATION SHALL BE ALLOWED TO MAKE THE INSPECTION AND THE DETERMINATION FOR THE COMPETENCY OF THE BEDROCK.

19. THE TOP SURFACE OF ALL SUBFOOTINGS SHALL BE INTENTIONALLY ROUGHENED TO ¼" AMPLITUDE.

20. WHERE COMPETENT BEDROCK IS ABOVE THE DESIGN BOTTOM OF FOOTING ELEVATION, IT SHALL BE REMOVED WITH CONTRACT PAY ITEMS OR A BEDROCK PROFILE SHALL BE PROVIDED BY THE CONTRACTOR TO THE STRUCTURES ENGINEER TO DETERMINE WHETHER THE DESIGN BOTTOM OF FOOTING ELEVATION MAY BE RAISED. THREE (3) WORKING DAYS FROM RECEIPT OF THE BEDROCK PROFILE SHALL BE ALLOWED TO MAKE THE DETERMINATION. FOOTING ELEVATIONS SHALL NOT BE ADJUSTED WITHOUT APPROVAL OF THE STRUCTURES ENGINEER.

21. OVERBREAKAGE AND REPLACEMENT WITH THE FOOTING CONCRETE BEYOND THE AVERAGE MAXIMUM ALLOWANCE SPECIFIED IN SUBSECTIONS 204.09(B) (1) AND 208.11(C) WILL BE AT THE CONTRACTOR'S EXPENSE.

22. DOWELS SHALL BE DRILLED AND GROUTED INTO BEDROCK WHEN SHOWN ON THE PLANS OR AS ORDERED BY THE ENGINEER. THE DOWELS SHALL HAVE A 2'-0" MINIMUM EMBEDMENT IN THE BEDROCK AND SHALL EXTEND IN THE FOOTING A MINIMUM OF 1'-6", UNLESS NOTED OTHERWISE.

STRUCTURAL STEEL

23. AFTER THE DECK HAS BEEN PLACED AND CURED, GIRDERS AT ABUTMENT 1 AND ABUTMENT 2 WILL BE JACKED UP TO ALLOW THE ELASTOMERIC BEARINGS TO RETURN TO THEIR ORIGINAL POSITION BEFORE WELDING THE SOLE PLATES TO THE BOTTOM FLANGE. FINAL POSITION OF THE VERTICAL BEARING FACES WILL BE STRAIGHT. PAYMENT FOR THIS WORK WILL BE INCIDENTAL TO CONTRACT ITEM 531.11. NO GIRDER WILL BE JACKED MORE THAN ½" FROM ITS ORIGINAL POSITION.

24. THE DOWNSPOUTS LOCATED AT ABUTMENT #1, THE PIER, AND ABUTMENT #2 WILL BE PAID FOR UNDER ITEM 506.60, STRUCTURAL STEEL.

25. AFTER SUPERSTRUCTURE STEEL HAS BEEN ERECTED, ELEVATIONS ALONG THE TOP OF THE GIRDERS SHALL BE TAKEN AS DIRECTED BY THE RESIDENT ENGINEER FOR USE IN DETERMINING FINISHED GRADES.

26. FLEMING BRACKETS OR SIMILAR FALSEWORK SHALL BE SPACED AS REQUIRED BY DESIGN, BUT SHALL BE LIMITED TO A MAXIMUM SPACING OF 4 FEET. THE DESIGN OF FALSEWORK SHALL BE THE RESPONSIBILITY OF THE CONTRACTOR.

27. ANY BOLT HOLES IN THE WEBS OF FASCIA GIRDERS NOT OTHERWISE FILLED SHALL BE FILLED WITH BUTTON HEAD OR HEX HEAD BOLTS. THE BOLTS SHALL BE TIGHTENED IN ACCORDANCE WITH SUBSECTION 506.19.

CONCRETE

28. ABUTMENTS, PORTION OF BACKWALLS BELOW THE CONSTRUCTION JOINT , PIER STEM AND APPROACH SLABS SHALL BE HIGH PERFORMANCE CLASS B AND SHALL BE PAID FOR UNDER ITEM 501.34, "CONCRETE, HIGH PERFORMANCE CLASS B". DECK, CURB, AND PORTION OF BACKWALL ABOVE THE CONSTRUCTION JOINT CONCRETE SHALL BE HIGH PERFORMANCE CONCRETE, CLASS A LOW CEMENT AND SHALL BE PAID FOR UNDER ITEM 900.608 SPECIAL PROVISION (HIGH PERFORMANCE CONCRETE, CLASS A LOW CEMENT). PIER FOOTING WILL BE HIGH PERFORMANCE CONCRETE AND PAID FOR UNDER ITEM 900.608 SPECIAL PROVISION (HIGH PERFORMANCE CONCRETE, MASS POUR).

29. CONCRETE FOR SUBFOOTING IF REQUIRED SHALL BE PAID FOR UNDER ITEM 541.30, "CONCRETE, CLASS C". PAYMENT FOR SUBFOOTING CONCRETE WILL BE MADE ONLY FOR CONCRETE WITHIN THE LIMITS FOR SUBFOOTING SHOWN ON THE PLANS.

30. SURFACES OF ABUTMENT BRIDGE SEATS UNDER BEARING DEVICES SHALL BE LEVEL. ALL OTHER AREAS OF ABUTMENT BRIDGE SEATS SHALL BE SLOPED 1/2 INCH PER FOOT. THE ENTIRE BRIDGE SEAT SURFACE SHALL BE GIVEN A MAGNESIUM FLOAT FINISH. PIER BRIDGE SEATS SHALL BE LEVEL.

31. THE ABANDONED PIPE ON THE MIDDLESEX SIDE WILL BE FILLED WITH FLOWABLE CONCRETE AND WILL PAID UNDER ITEM 900.608 SPECIAL PROVISION (CONTROLLED DENSITY (FLOWABLE) FILL).

32. CONCRETE PORTIONS OF ABUTMENTS AND WINGWALLS ABOVE ADJACENT BRIDGE SEAT ELEVATIONS SHALL NOT BE PLACED UNTIL FINISH GRADES HAVE BEEN DETERMINED BY THE RESIDENT ENGINEER.

33. IN ACCORDANCE WITH SUBSECTION 506.23(a) AND AS DIRECTED BY THE RESIDENT ENGINEER, THE CONTRACTOR SHALL TAKE MEASURES NECESSARY TO PROTECT ALL SUBSTRUCTURE CONCRETE FROM STAINING DUE TO OXIDE FORMATION ON THE STRUCTURAL STEEL PRIOR TO PLACEMENT OF THE DECK. THESE MEASURES WILL NOT BE PAID FOR SEPARATELY BUT WILL BE INCLUDED IN THE UNIT PRICE BID FOR ITEM 501.34, "CONCRETE, HIGH PERFORMANCE CLASS B". ANY SUCH STAINING THAT OCCURS PRIOR TO DECK PLACEMENT SHALL BE REMOVED AT NO ADDITIONAL COST TO THE STATE.

34. ALL EXPOSED EDGES OF CONCRETE SHALL BE CHAMFERED 1 INCH X 1 INCH.

35. WATER REPELLENT, SILANE SHALL BE APPLIED TO ALL EXPOSED CONCRETE SURFACES, EXCEPT THE UNDERSIDE OF THE DECK BETWEEN DRIP NOTCHES.

36. RELATIVE TO GRADE ALL INDIVIDUAL DECK PLACEMENTS SHOULD START ON THE LOW END.

37. JOINTS AND SCORE MARKS IN CONCRETE SHALL BE CONSTRUCTED AS SHOWN IN THE PLANS OR AS DIRECTED BY THE RESIDENT ENGINEER.

38. THE KEY IN CONCRETE EXPANSION JOINTS SHALL BE MONOLITHIC AND CONTINUOUS FOR THE FULL LENGTH OF THE JOINT.

39. ALL SUPERSTRUCTURE REINFORCING STEEL SHALL BE EPOXY COATED AND PAID FOR UNDER ITEM 507.17, "EPOXY COATED REINFORCING STEEL". CUTTING AND REPAIRING DAMAGED AREAS OF COATED REINFORCING STEEL SHALL BE PERFORMED IN ACCORDANCE WITH SUBSECTION 507.04.

40. MINIMUM COVER FOR REINFORCING STEEL SHALL BE AS INDICATED IN THE PLANS.

PILES

41. THE PILES SHALL BE DRIVEN TO A NOMINAL RESISTANCE OF 330 kips. TO PREVENT DAMAGE TO THE PILES, PILE SHOES ARE REQUIRED AND SHALL CONFORM TO SECTION 505.

42. A MINIMUM OF ONE DYNAMIC PILE TEST SHALL BE CONDUCTED ON THE FIRST PILE DRIVEN FOR EACH SUBSTRUCTURE UNIT.

43. FOR ESTIMATING PURPOSES, THE PILE TIP ELEVATIONS WERE ASSUMED AS SHOWN ON THE BORING LOGS. ACTUAL IN PLACE LENGTHS MAY VARY.

GENERAL NOTES SHEET

PROJECT NAME: MORETOWN-MIDDLESEX
PROJECT NUMBER: BRS 0284(14)

FILE NAME: 78f219/str/sf219pl.dgn
PROJECT LEADER: M. EVANS-MONGEON
DESIGNED BY: S. SCRIBNER

PLOT DATE: 15-JUN-2009
DRAWN BY: L. DUQUETTE
CHECKED BY: EVANS-MONGEON

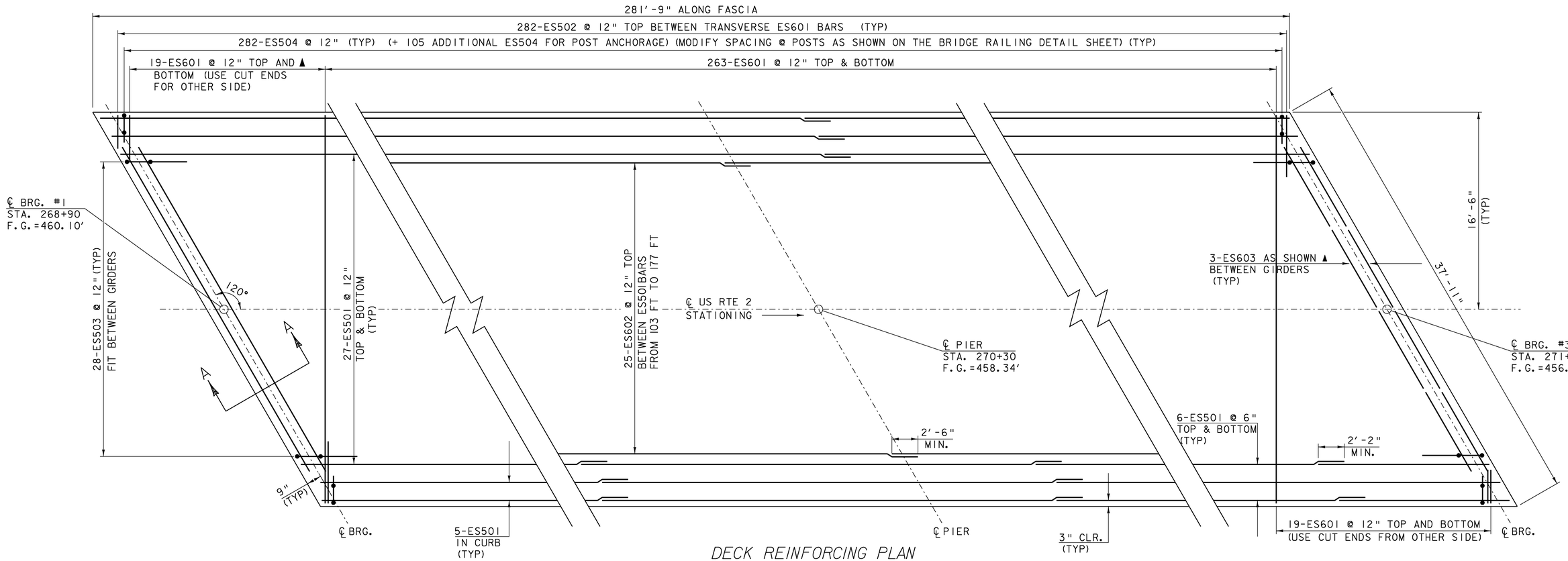

DECK REINFORCING PLAN

SCALE 1/4" = 1'-0
1 0 2 4 6

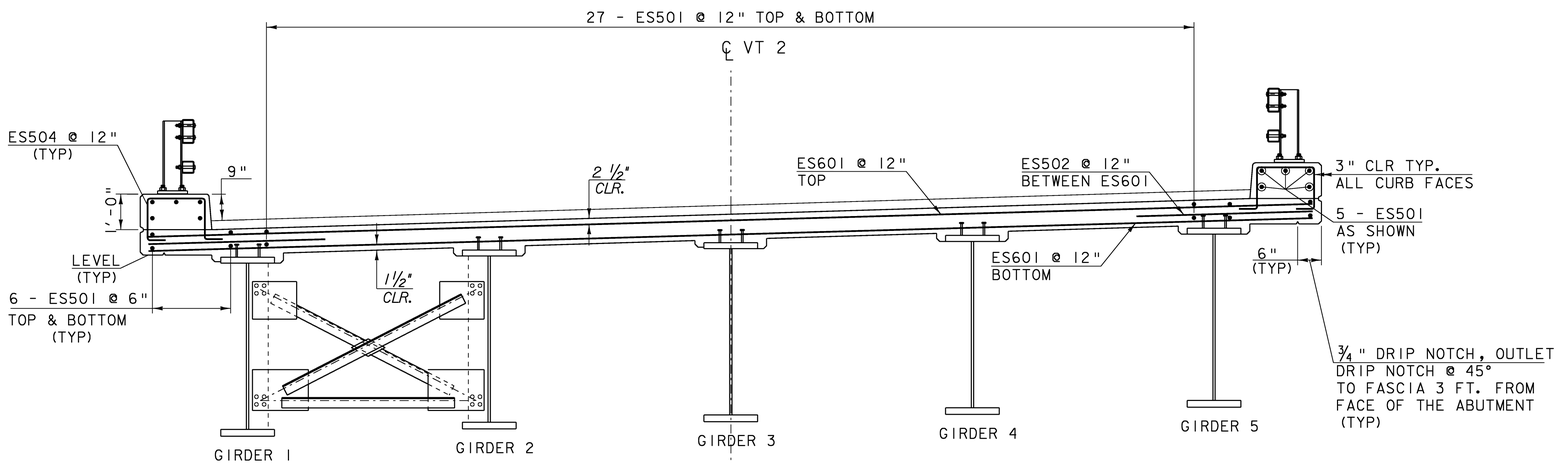

TYPICAL BRIDGE SECTION

SCALE 1/2" = 1'-0"
1 0 1 2

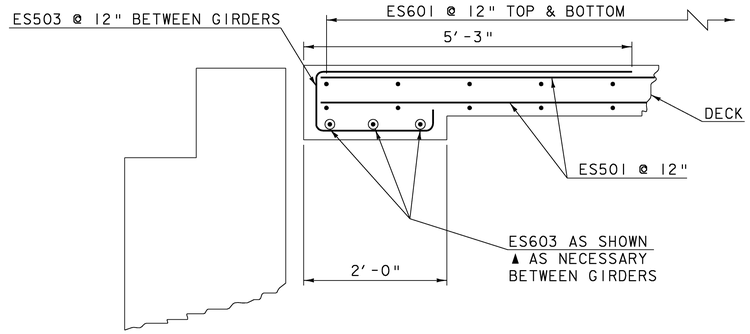

SECTION A-A (TYP)

NOT TO SCALE

NOTE:

NF = NEAR FACE
FF = FAR FACE
EF = EACH FACE
▲ = CUT TO FIT IN FIELD
3" CLEAR, UNLESS OTHERWISE SPECIFIED ON THE PLANS.
2'-2" BAR LAP UNLESS OTHERWISE SPECIFIED ON THE PLANS.

DECK REINFORCING PLAN

PROJECT NAME: MORETOWN-MIDDLESEX
PROJECT NUMBER: BRS 0284(14)

FILE NAME: 78f219/struc./sf219sup
PROJECT LEADER: M. EVANS-MONGEON
DESIGNED BY: S.SCRIBNER
PLOT DATE: 15-JUN-2009
DRAWN BY: G.ROKES
CHECKED BY: S. SCRIBNER
SHEET 45 OF 103

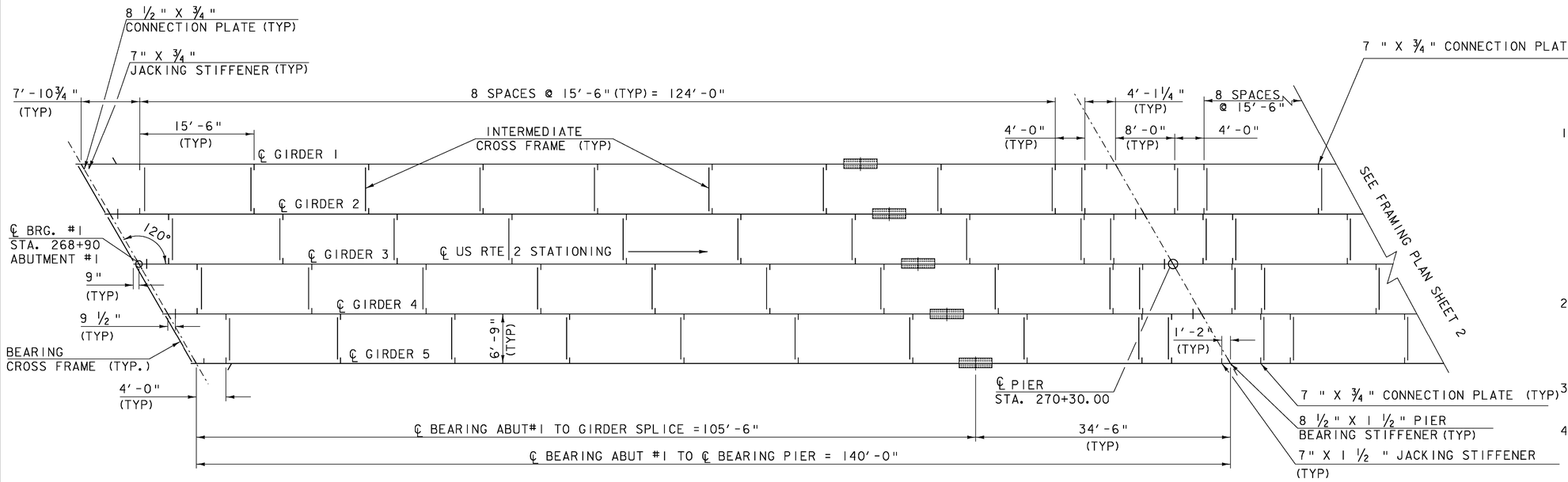

FRAMING PLAN

SCALE 1/8" = 1'-0
10 2 4 6 8

DECK PLACEMENT SEQUENCE NOTES:

1. SUBJECT TO APPROVAL BY THE ENGINEER, THE INDICATED PLACEMENT SEGMENTS MAY BE PERFORMED IN THE SAME DAY PROVIDED THAT THE MAXIMUM TOTAL TIME SPAN FOR ALL PLACEMENT IS EIGHT HOURS. THE INDICATED PLACEMENT SEQUENCE SHALL BE PERFORMED AND A RETARDING ADMIXTURE USED SO THAT THE DECK CONCRETE WILL NOT SET UP UNTIL IT HAS ALL BEEN PLACED. PAYMENT FOR THE RETARDING ADMIXTURE USED WOULD BE MADE INCIDENTAL TO ITEM 501.33, CONCRETE, HIGH PERFORMANCE CLASS A.
2. IF CIRCUMSTANCES BEYOND THE CONTRACTOR'S CONTROL PREVENT THIS FROM BEING ACCOMPLISHED, A TRANSVERSE CONSTRUCTION JOINT SHALL BE USED BETWEEN ADJACENT POURS. A MINIMUM 96 HOUR DELAY BETWEEN ADJACENT POURS SHALL BE OBSERVED.
3. PLACEMENT NO. 1 AND 2 MAY BE INTERCHANGED, AND MAY BE PERFORMED SIMULTANEOUSLY.
4. ANY PLACEMENT SEQUENCE OTHER THAN THAT INDICATED ON THIS SHEET OR IN THESE NOTES SHALL BE SUBMITTED IN WRITING TO THE STRUCTURES ENGINEER FOR APPROVAL.

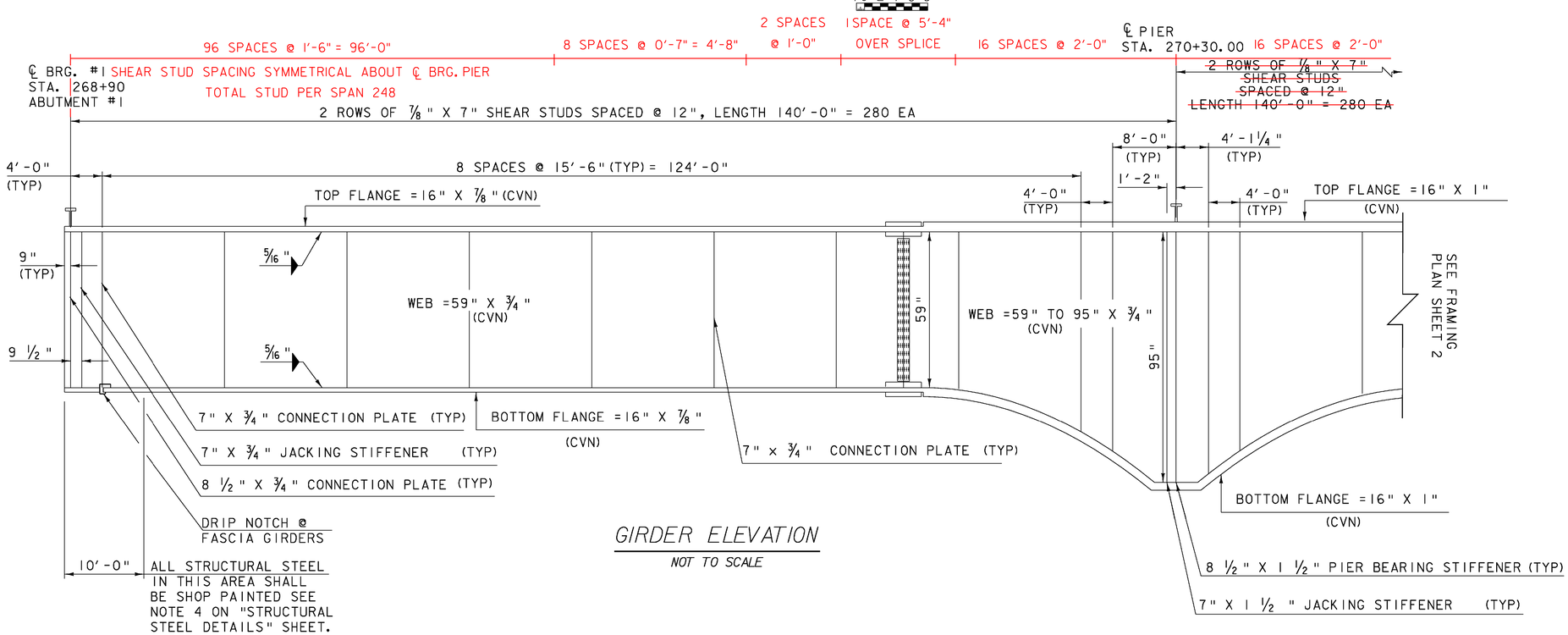

GIRDER ELEVATION

NOT TO SCALE

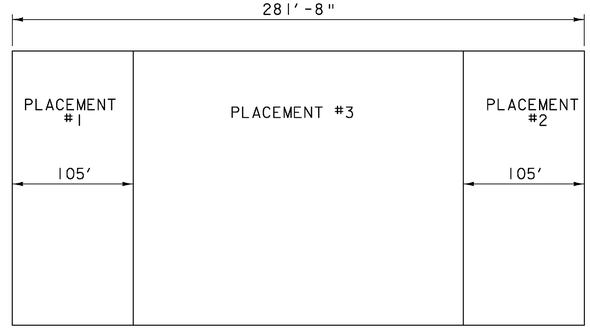

DECK PLACEMENT SEQUENCE

NOT TO SCALE

NOTES:

1. CVN - SHALL MEET CHARPY V-NOTCH REQUIREMENTS FOR MAIN MEMBERS AS INDICATED IN SECTION 714
2. ALL STRUCTURAL STEEL, EXCEPT FOR THE DOWNSPOUTS SHALL BE AASHTO M270M/M270GR 50W.

FRAMING PLAN SHEET 1

PROJECT NAME:	MORETOWN-MIDDLESEX
PROJECT NUMBER:	BRS 0284(14)

FILE NAME: 78f219/struc./sf219sup		PLOT DATE:	15-JUN-2009
PROJECT LEADER:	M. EVANS-MONGEON	DRAWN BY:	G.ROKES
DESIGNED BY:	S. SCRIBNER	CHECKED BY:	S. SCRIBNER
		SHEET 46	OF 103

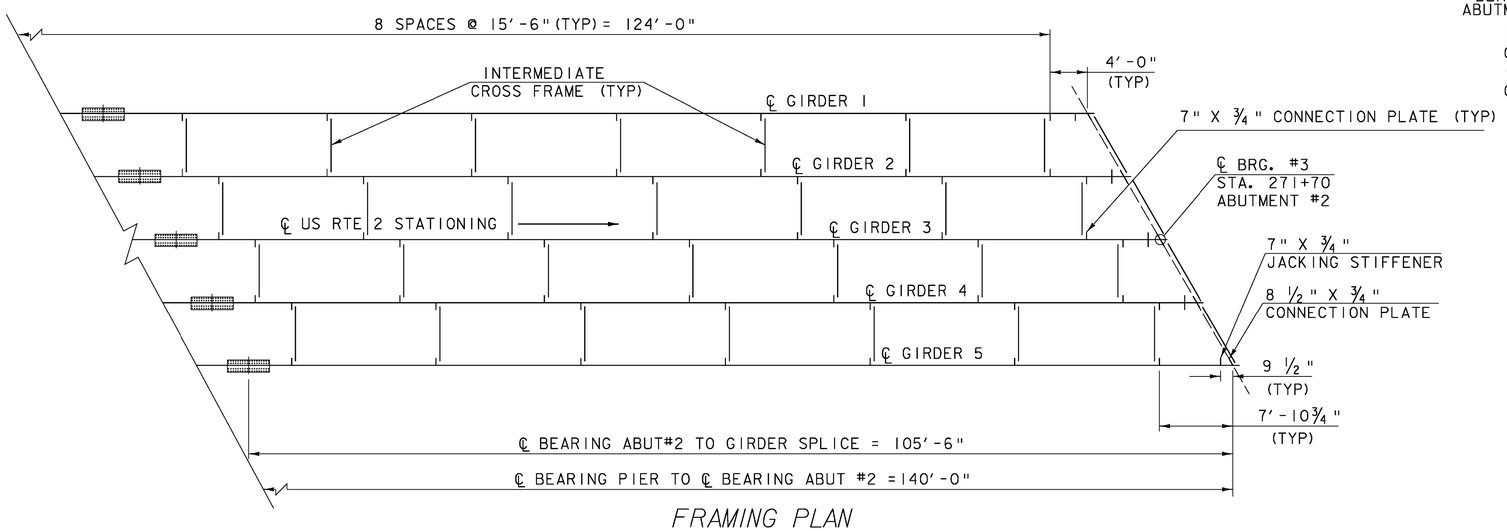

FRAMING PLAN

SCALE 1/8" = 1'-0
10 2 4 6 8

SHEAR STUD SPACING SYMMETRICAL ABOUT ℄ BRG. PIER TOTAL STUDS PER SPAN 248

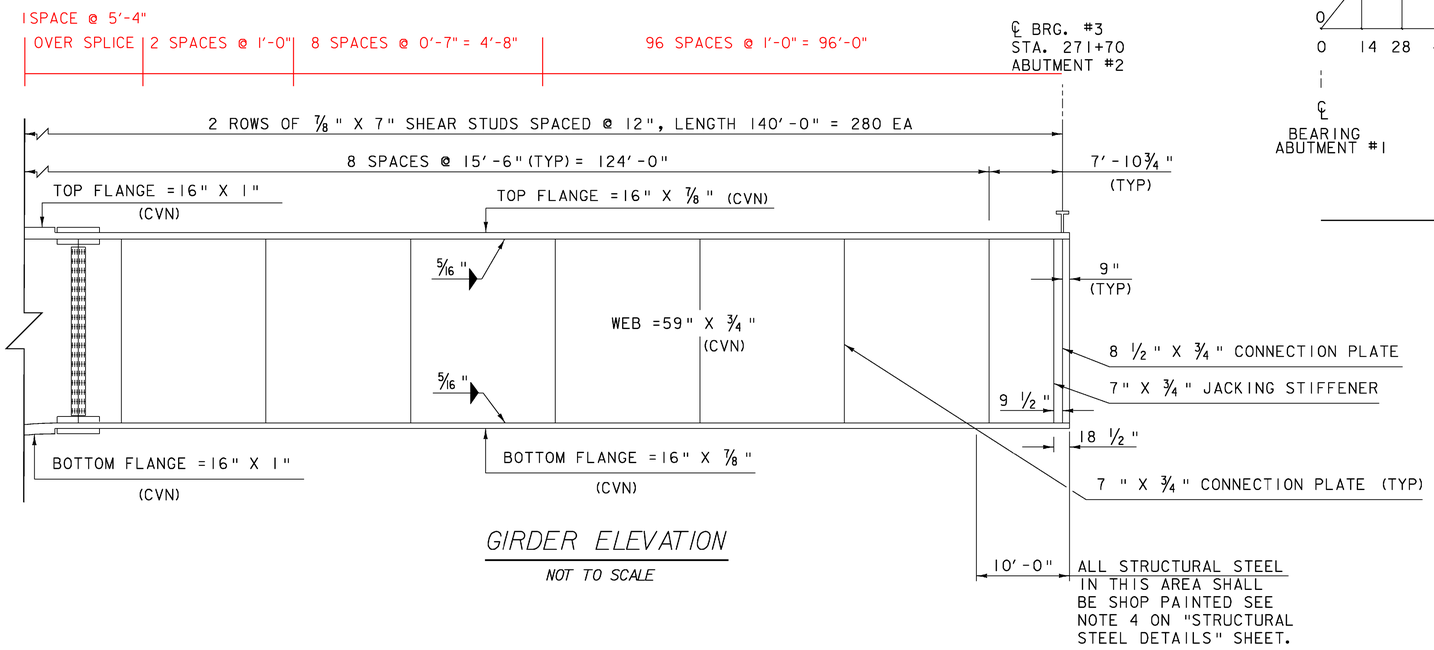

GIRDER ELEVATION

NOT TO SCALE

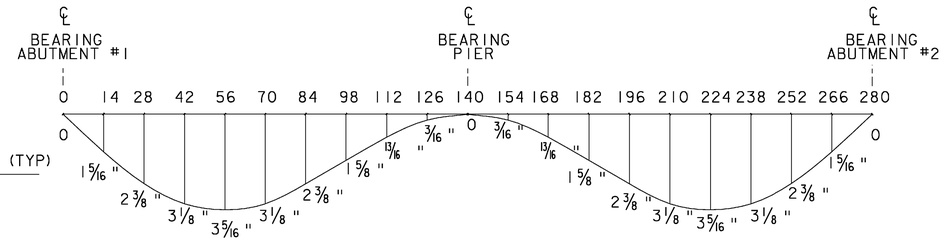

DEAD LOAD DEFLECTION DIAGRAM

NOT TO SCALE

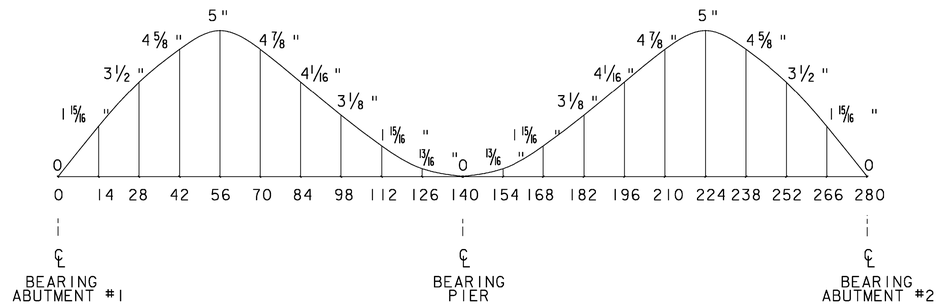

CAMBER DIAGRAM

NOT TO SCALE

NOTE: CAMBER AND DEFLECTION MEASUREMENTS ARE GIVEN IN INCHES TO THE NEAREST SIXTEENTH. MEASUREMENTS INCLUDE GIRDER SELF-WEIGHT

NOTES:

1. CVN - SHALL MEET CHARPY V-NOTCH REQUIREMENTS FOR MAIN MEMBERS AS INDICATED IN SECTION 714.
2. ALL STRUCTURAL STEEL, EXCEPT FOR THE DOWNSPOUTS SHALL BE AASHTO M270M/M270GR 50W.

FRAMING PLAN SHEET 2

PROJECT NAME:	MORETOWN-MIDDLESEX
PROJECT NUMBER:	BRS 0284(14)
FILE NAME: 78f219/struc./sf219sup	PLOT DATE: 15-JUN-2009
PROJECT LEADER: M. EVANS-MONGEON	DRAWN BY: G.ROKES
DESIGNED BY: S. SCRIBNER	CHECKED BY: S. SCRIBNER
	SHEET 47 OF 103

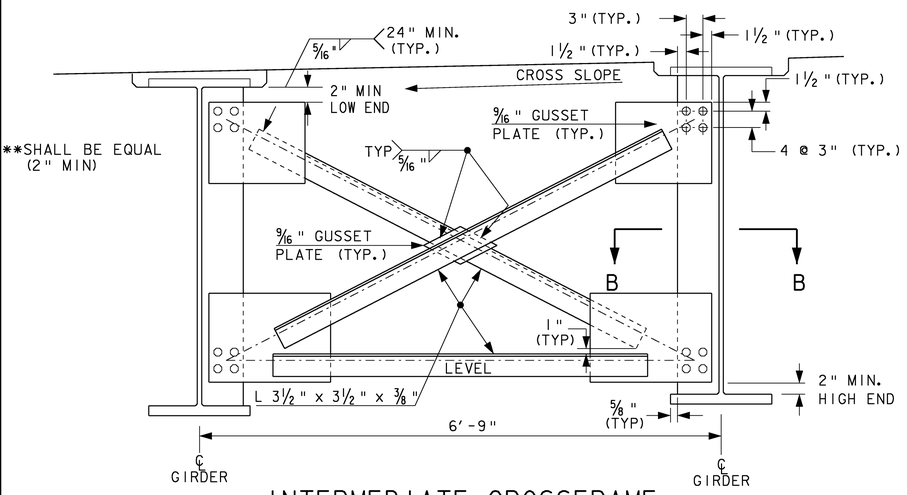

INTERMEDIATE CROSSFRAME

THE FABRICATOR MAY ALTER THE SHAPE OF THE GUSSET PLATES AS SEEN FIT WHILE MAINTAINING THE BOLT HOLE LOCATIONS.

TEMPLATE SIZES FOR ALL CROSS FRAMES WILL DEPEND ON THE GIRDER DEPTH AT THE CROSS FRAME CONNECTION PLATES AS SHOWN ON THE FRAMING PLAN.

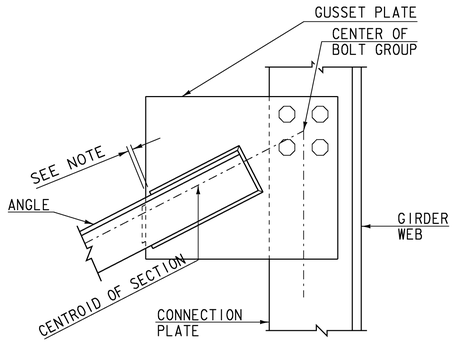

NOTE: NO WELD FOR 1/4" MIN., 1/2" MAX. DISTANCE FROM GUSSET PLATE EDGES

GUSSET PLATE AND WELD DETAIL FOR CROSSFRAME

STRUCTURAL STEEL NOTES :

1.) ALL STRUCTURAL STEEL, EXCEPT FOR THE DOWNSPOUTS, INCLUDING BUT NOT LIMITED TO GIRDERS, CROSS FRAMES AND CONNECTION PLATES SHALL CONFORM TO AASHTO M270/M270M GRADE 50W AND SHALL BE PAID UNDER THE ITEM 506.55 "STRUCTURAL STEEL, PLATE GIRDER".

2.) ALL FIELD CONNECTIONS IN UNPAINTED AREAS SHALL BE MADE USING 7/8" DIAMETER TYPE 3 BOLTS MEETING AASHTO M 164, TYPE 3 SPECIFICATIONS. ALL HOLES SHALLBE15/16" DIAMETER EXCEPT HOLES IN THE CONNECTION PLATES SHALL BE 1" DIAMETER. IN PAINTED AREAS ALL FIELD CONNECTIONS SHALL BE MADE USING 7/8" DIAMETER TYPE 1 BOLTS MEETING AASHTO M 164 SPECIFICATIONS. ANY CONNECTIONS NOT DESIGNATED SHALL BE DETAILED BY THE FABRICATOR AND SUBMITTED TO THE PROJECT MANAGER FOR APPROVAL. ALL TYPE 1 BOLTS SHALL BE GALVANIZED PER AASHTO M232M/M232.

3.) ANY HOLES IN THE FACIA BEAMS NOT OTHERWISE FILLED SHALL BE FITTED WITH BOLTS CONFORMING TO AASHTO M 164, TYPE 3.

4.) THE ENDS OF THE GIRDERS SHALL BE PAINTED FOR A DISTANCE OF 10'-0" AT EACH END. ALL CROSS FRAMES AND CONNECTION PLATES LOCATED IN THIS AREA SHALL ALSO BE PAINTED. THE PAINT SYSTEM SHALL CONFORM TO SECTION 513 OF THE STANDARD SPECIFICATIONS AND THE FINAL COLOR SHALL BE BROWN CONFORMING TO SUBSECTION 708.03. GREASE SHALL ALSO BE APPLIED IN THIS AREA AS SPECIFIED IN SUBSECTION 513.06(d). THE GREASE SHALL BE BROWN.

5.) STRUCTURAL STEEL MEMBERS DESIGNATED "CVN"IN THE PLANS SHALL BE CHARPY V-NOTCH TESTED IN ACCORDANCE WITH SUBSECTION 714.

6.) SEE SUPERSTRUCTURE DETAILS SHEETS, FRAMING PLAN SHEET 1, FRAMING PLAN SHEET 2, AND BEAM SPLICE/HAUNCH DETAILS SHEET FOR ADDITIONAL DETAIL INFORMATION.

7.) ENDS OF GIRDERS TO BE VERTICAL IN FINAL POSITION.

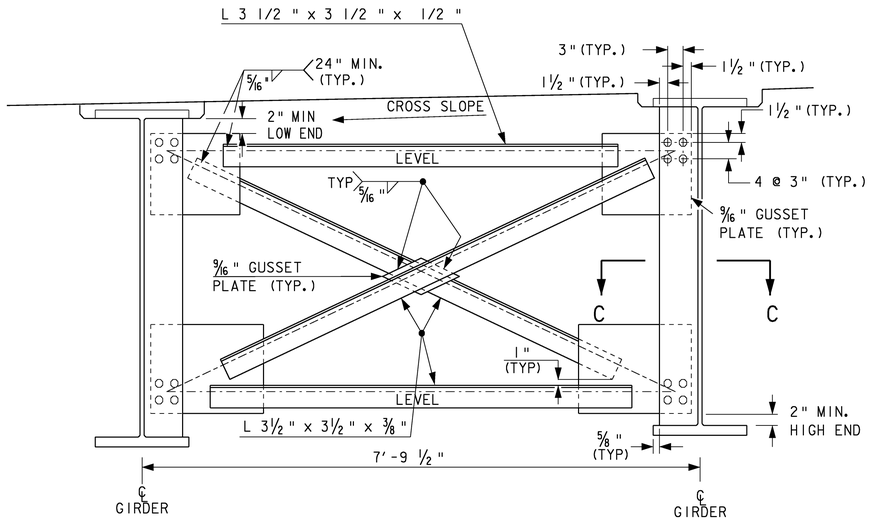

ABUTMENT 1&2 BEARING CROSSFRAME

THE FABRICATOR MAY ALTER THE SHAPE OF THE GUSSET PLATES AS SEEN FIT WHILE MAINTAINING THE BOLT HOLE LOCATIONS.

TEMPLATE SIZES FOR ALL CROSS FRAMES WILL DEPEND ON THE GIRDER DEPTH AT THE CROSS FRAME CONNECTION PLATES AS SHOWN ON THE FRAMING PLAN.

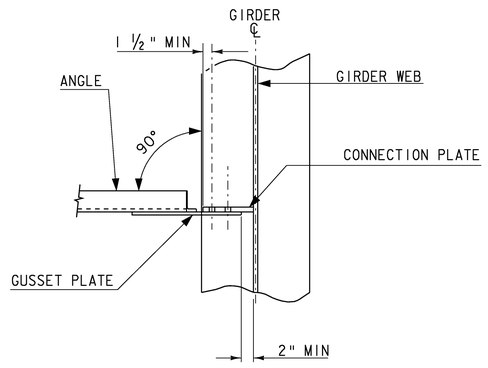

SECTION B-B

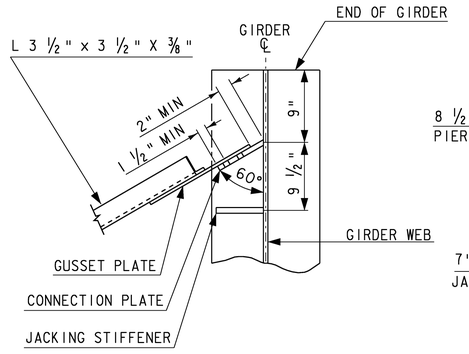

SECTION C-C

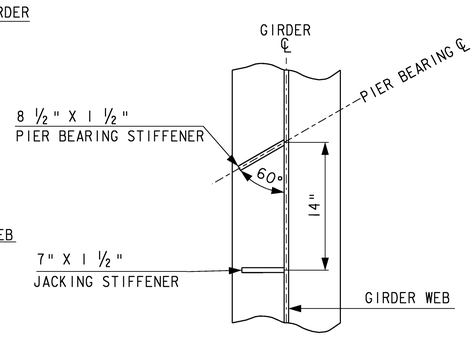

PIER BEARING/JACKING STIFFENER DETAIL

ALL DETAILS ON THIS SHEET ARE DRAWN NOT TO SCALE UNLESS NOTED OTHERWISE

STRUCTURAL STEEL DETAILS

PROJECT NAME: MORETOWN-MIDDLESEX
PROJECT NUMBER: BRS 0284(14)

FILE NAME: 78f219/struc./sf219sup
PROJECT LEADER: M. EVANS-MONGEON
DESIGNED BY: S.SCRIBNER
PLOT DATE: 15-JUN-2009
DRAWN BY: G.ROKES
CHECKED BY: S. SCRIBNER

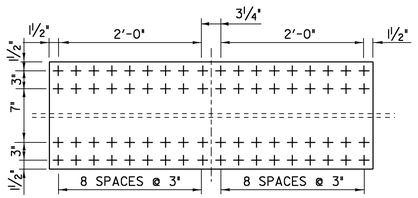

PLAN VIEW
TOP & BOTTOM
(TYP)

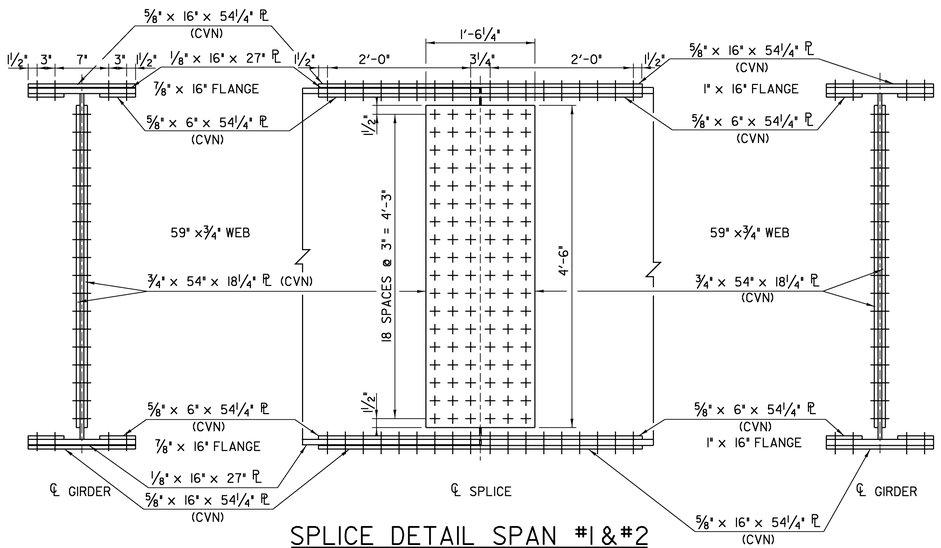

SPLICE DETAIL SPAN #1&#2

SCALE 1" = 1'-0

NOTES:

1. CVN - SHALL MEET CHARPY V-NOTCH REQUIREMENTS FOR MAIN MEMBERS AS INDICATED IN SECTION 714.
2. ALL STRUCTURAL STEEL, EXCEPT FOR THE DOWNSPOUTS SHALL BE AASHTO M270M/M270GR 50W.
3. ALL BOLT HOLES IN SPLICE PLATES SHALL BE 15/16 "Ø W/ ⅞"Ø BOLTS

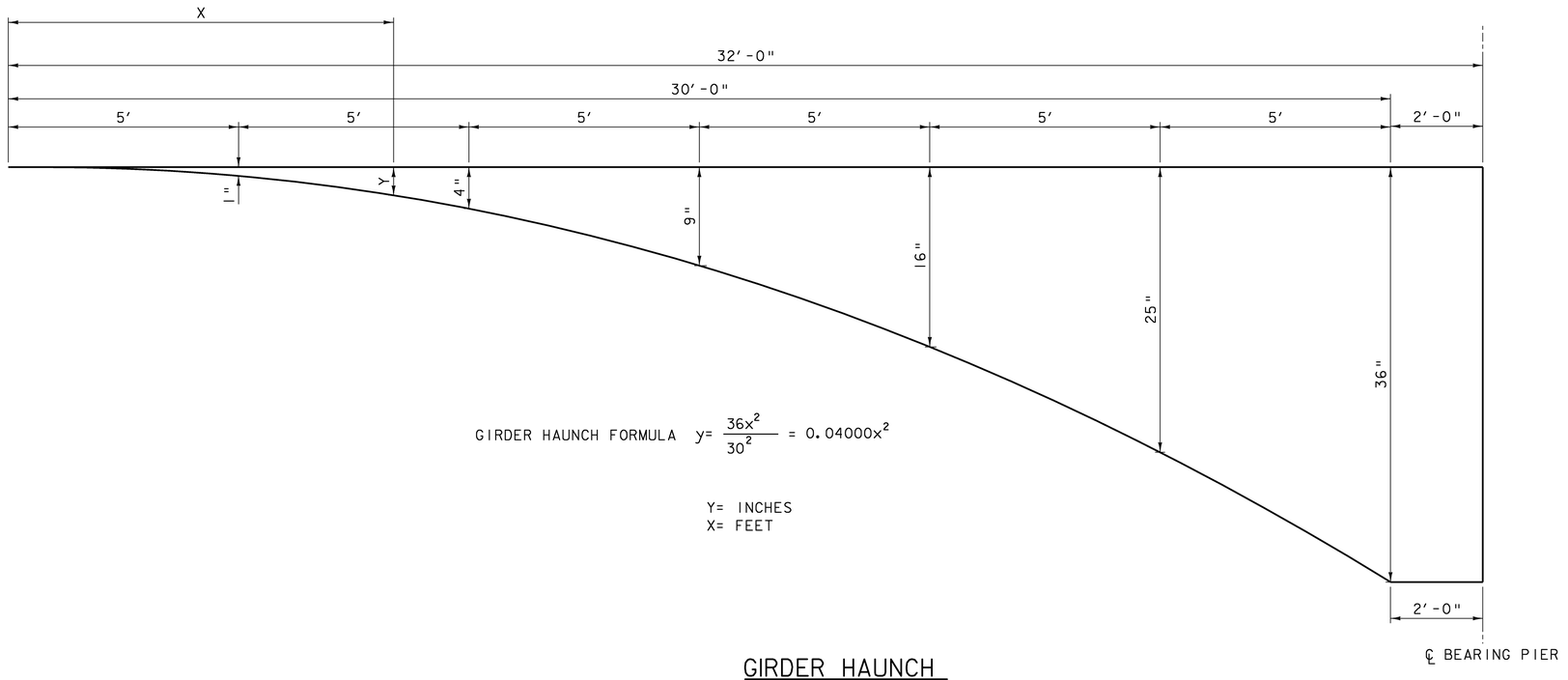

GIRDER HAUNCH FORMULA $y = \frac{36x^2}{30^2} = 0.04000x^2$

Y= INCHES
X= FEET

GIRDER HAUNCH

NOT TO SCALE

BEAM SPLICE /HAUNCH DETAILS

PROJECT NAME: MORETOWN-MIDDLESEX
PROJECT NUMBER: BRS 0284(14)

FILE NAME: 78f219/struc./sf219sup
PROJECT LEADER: M. EVANS-MONGEON
DESIGNED BY: S.SCRIBNER
PLOT DATE: 15-JUN-2009
DRAWN BY: G.ROKES
CHECKED BY: S. SCRIBNER
SHEET 49 OF 103

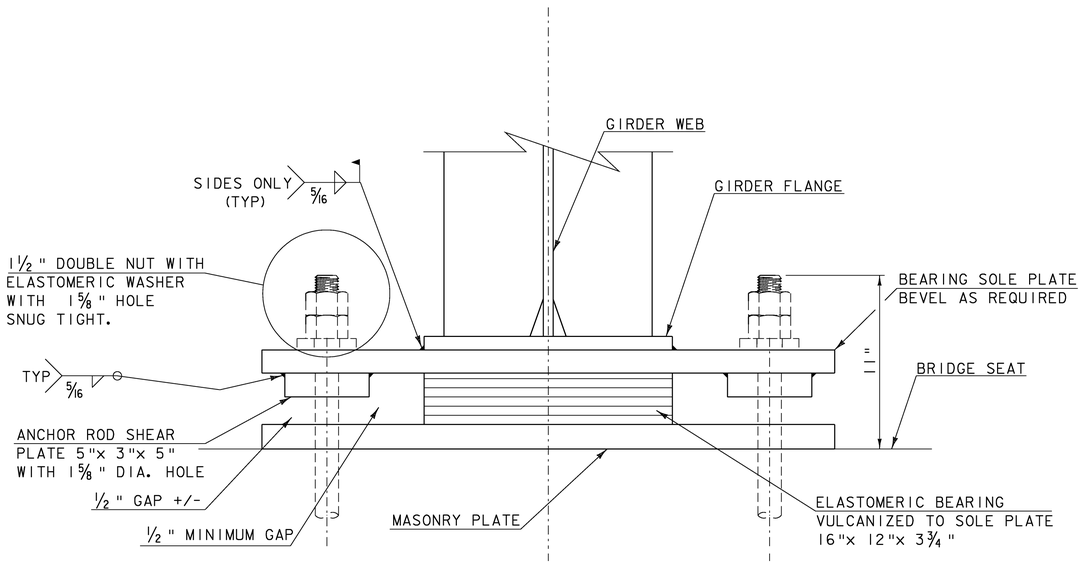

END ELEVATION

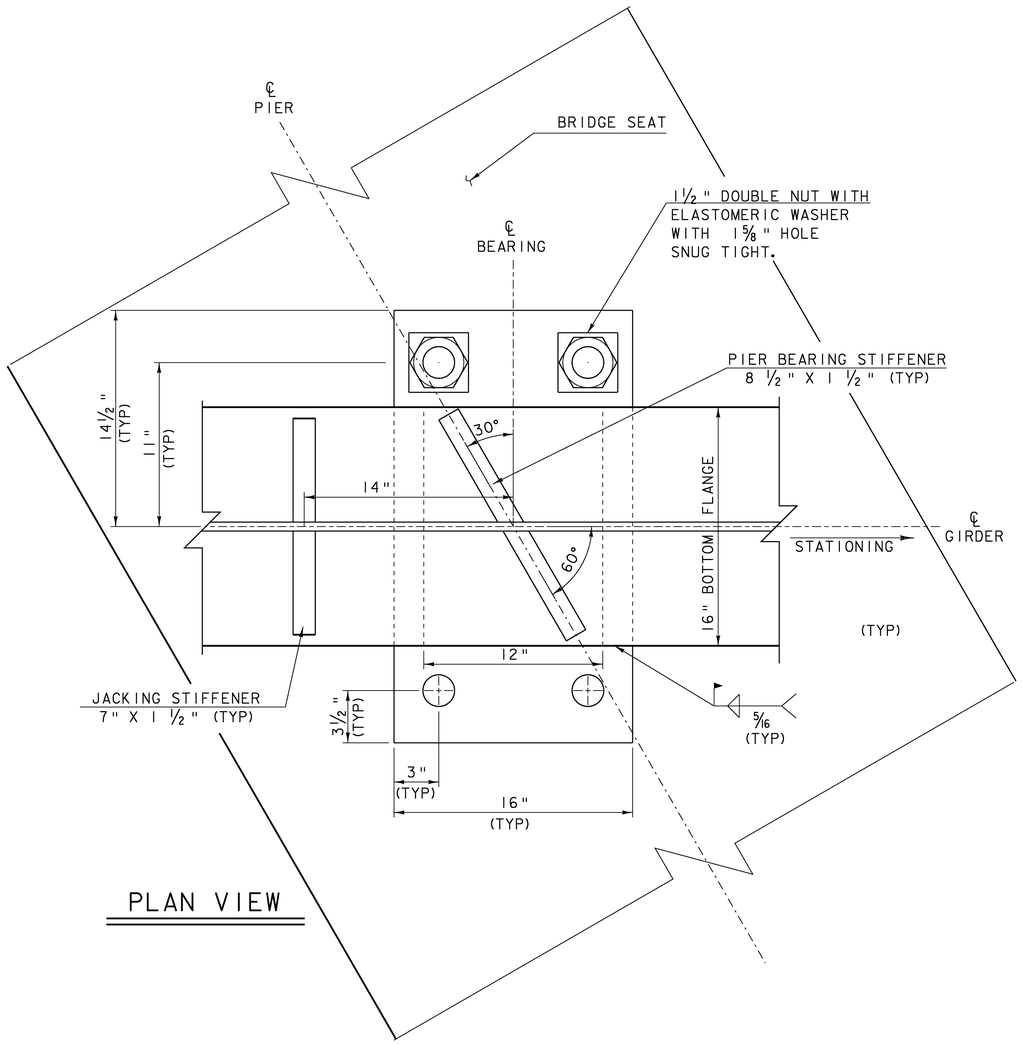

PLAN VIEW

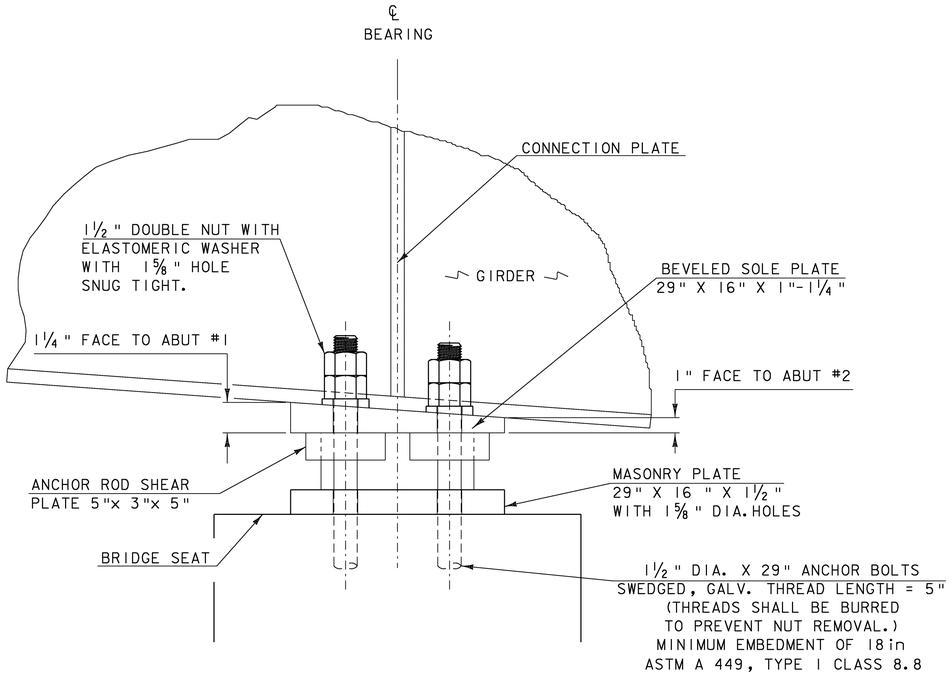

SIDE ELEVATION

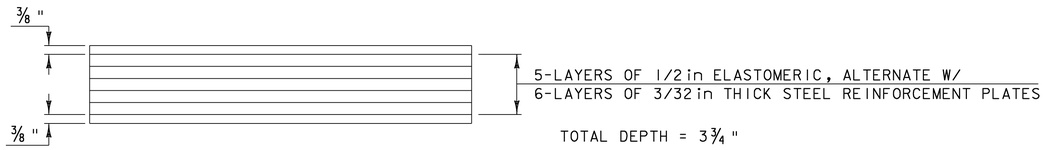

ELASTOMERIC BEARING CONFIGURATION

PIER FIXED BEARING DETAILS

NOT TO SCALE

BEARING DETAILS 1

PROJECT NAME:	MORETOWN-MIDDLESEX
PROJECT NUMBER:	BRS 0284(14)

FILE NAME: 78f219/struc./sf219sup		PLOT DATE:	15-JUN-2009
PROJECT LEADER:	M. EVANS-MONGEON	DRAWN BY:	G. ROKES
DESIGNED BY:	S.SCRIBNER	CHECKED BY:	S. SCRIBNER
		SHEET 50	OF 103

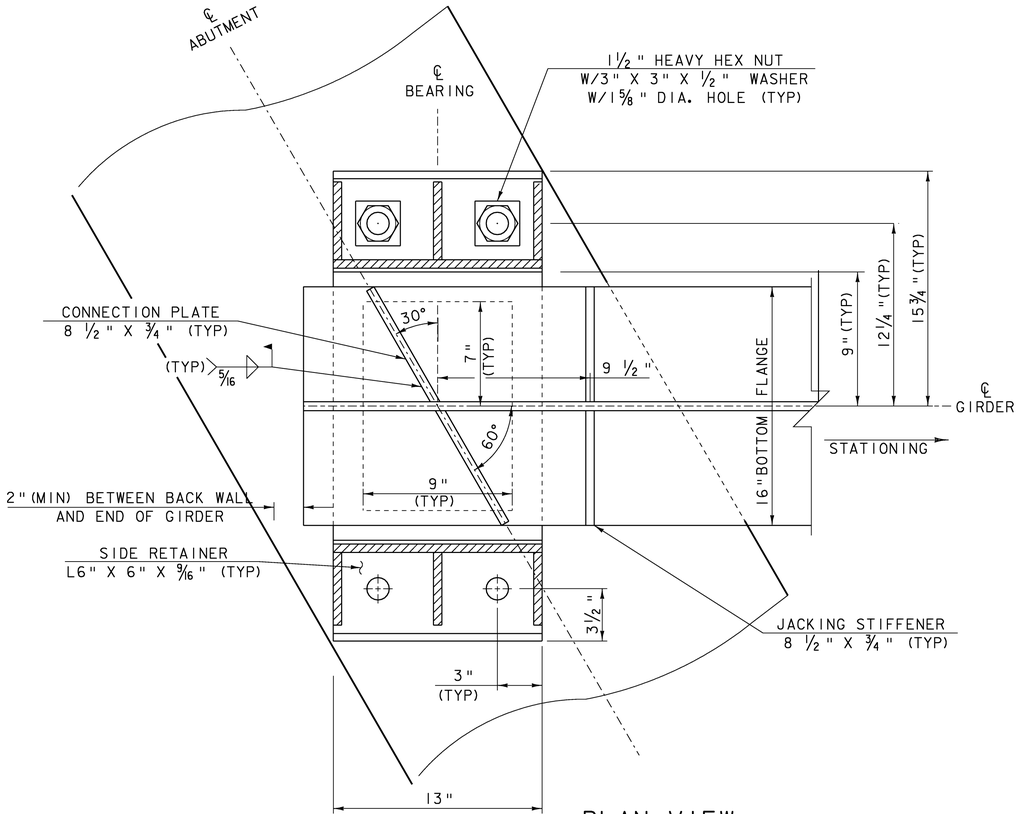

PLAN VIEW

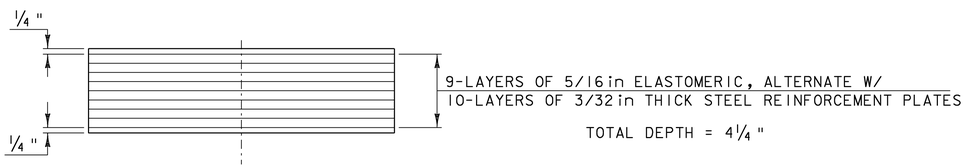

ELASTOMERIC BEARING CONFIGURATION

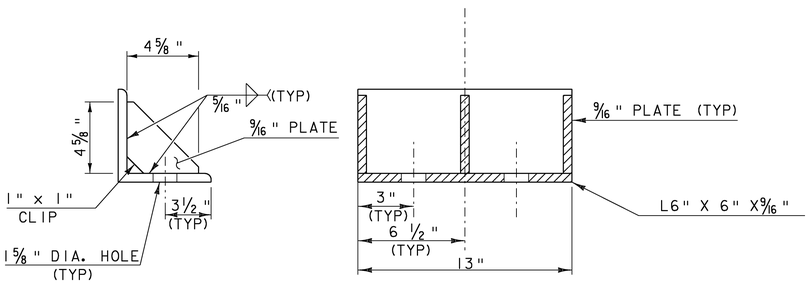

SIDE RETAINER

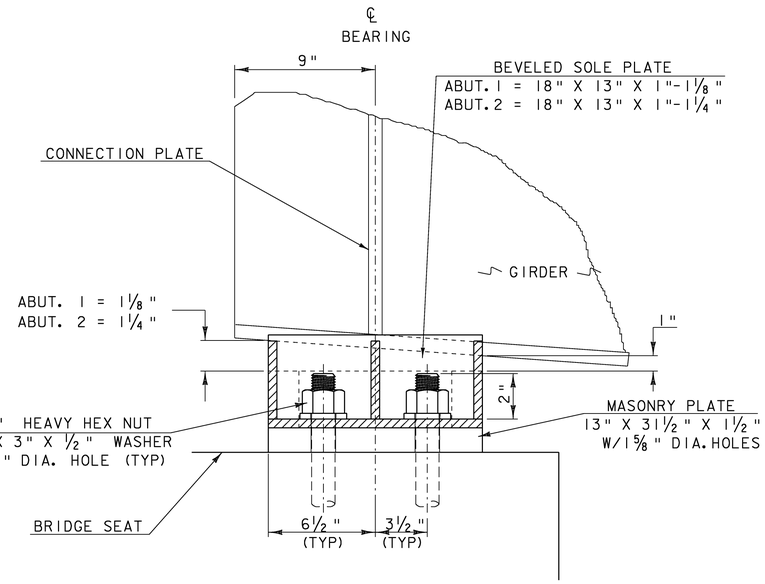

SIDE ELEVATION

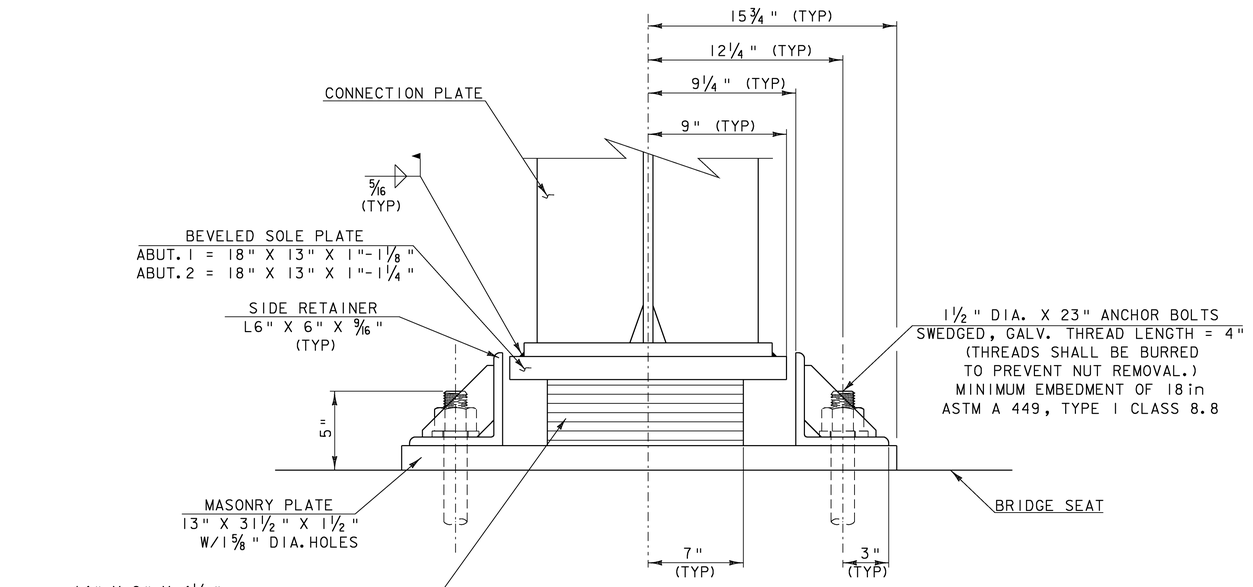

END ELEVATION

ABUT. 1 & 2 EXPANSION BEARING DETAILS

NOT TO SCALE

BEARING DETAILS 2

PROJECT NAME:	MORETOWN-MIDDLESEX
PROJECT NUMBER:	BRS 0284(14)
FILE NAME: 78f219/struc./sf219sup	PLOT DATE: 15-JUN-2009
PROJECT LEADER: M. EVANS-MONGEON	DRAWN BY: G. ROKES
DESIGNED BY: S.SCRIBNER	CHECKED BY: S. SCRIBNER
	SHEET 51 OF 103

BEARING NOTES

1. BEARINGS SHALL BE PAID FOR UNDER THE ITEM 531.11 "BEARING DEVICE ASSEMBLY, ELASTOMERIC PAD" AND SHALL CONFORM TO APPLICABLE SUBSECTIONS OF SECTIONS 531 AND 731.

2. THE FIELD WELD CONNECTING THE BOTTOM FLANGE WITH THE BEARING DEVICE SHALL BE MADE WITH E7018 RODS. AREAS OF METALIZING DAMAGED BY WELDING AND/OR HANDLING SHALL BE REPAIRED BY METALIZING IN ACCORDANCE WITH ASTM A 760.

3. FABRICATION DRAWINGS CONFORMING TO SUBSECTION 531.03 SHALL BE SUBMITTED AND INCLUDE ANY NECESSARY WELDING OR BONDING PROCEDURES.

4. ALL STEEL COMPONENTS SHALL BE METALIZED AS PER SUBSECTIONS 531.04(b) AND 506.15. AFTER THE BEARINGS ARE METALIZED, THEY SHALL BE SEALED WITH AN APPROVED PRIMER AS SPECIFIED IN SUBSECTION 506.15(b). ALL WASHERS SHALL BE 1/2 " PLATE MINIMUM. PAYMENT FOR ANCHOR BOLTS, NUTS, AND WASHERS SHALL BE INCLUDED IN THE UNIT BID PRICE FOR "BEARING DEVICE ASSEMBLY, ELASTOMERIC PAD". ANCHOR BOLTS, NUTS AND WASHERS SHALL BE GALVANIZED PER AASHTO M 232M/M 232.

5. ALL STEEL IN BEARING DEVICES SHALL BE AASHTO M 270M/M270 GRADE 50 UNLESS NOTED OTHERWISE.

6. ALL REINFORCEMENT BETWEEN LAYERS OF ELASTOMERIC SHALL BE STEEL ASTM A36. ALL INTERNAL STEEL PLATES SHALL BE SAND BLASTED AND FREE OF COATINGS, RUST, AND MILL SCALE. THE PLATES SHALL BE FREE OF SHARP EDGES AND BURRS.

7. STEEL REINFORCED ELASTOMERIC BEARINGS SHALL HAVE A MINIMUM OF 1/8 " EDGE SEAL OF ELASTOMER INTEGRAL WITH THE BEARING OVER ALL INTERNAL PLATES.

8. FOR ELASTOMERIC BEARINGS, ALL MATERIALS AND FABRICATION SHALL BE PER AASHTO LRFD BRIDGE DESIGN SPECIFICATIONS EDITION 2007 AND ITS LATEST REVISIONS AND AASHTO M 251.

9. ALTERNATE CONFIGURATIONS FOR BEARINGS MAY BE SUBMITTED FOR APPROVAL. ANY ALTERNATE SUBMITTED SHALL BE DESIGNED AND CERTIFIED TO MEET THE DESIGN LOADS AND CRITERIA SHOWN ON THIS SHEET. THE ALTERNATE SHALL MAINTAIN THE ANCHORAGE SYSTEM SHOWN AND SHALL BE DESIGNED PER AASHTO LRFD BRIDGE DESIGN SPECIFICATIONS 2007 EDITION AND ITS LATEST REVISIONS.

10. BRIDGE SEAT ELEVATIONS MAY BE REVISED TO ACCOMMODATE AN ALTERNATIVE CONFIGURATION.

11. DESIGN CRITERIA:

    A. MASONRY PLATE TO CONCRETE DESIGN PRESSURE = 4 KSI
    B. DESIGN ROTATION = 0.017 RAD
    C. HORIZONTAL CAPACITY SHALL BE MINIMUM OF 20% VERTICAL LOAD IN ANY RESTRAINED DIRECTION.
    D. DESIGN LOAD PER BEARING
        RDL = 94.2 kips
        RLL = 81.7kips
    E. TEMPERATURE RANGE = -15° TO 105° F
    F. ELASTOMER SHALL HAVE NOMINAL HARDNESS OF 60 ON SHORE 'A' SCALE.
       ELASTOMER SHALL HAVE A SHEAR MODULUS BETWEEN 0.13KSI AND 0.20 KSI
       THE RAW ELASTOMER SHALL BE VIRGIN NEOPRENE CLASSIFIED AS LOW
       TEMPERATURE GRADE 4 AS DEFINED IN TABLE 14.7.5.2 - 1 OF AASHTO LRFD
       BRIDGE DESIGN SPECIFICATIONS
    G. NO FABRIC REINFORCEMENT WILL BE ALLOWED IN ELASTOMERIC PADS

12. THE STEEL SOLE PLATES AND MASONRY PLATES SHALL BE HOT BONDED TO THE REINFORCED ELASTOMERIC PAD DURING THE VULCANIZATION PROCESS. THE STEEL SURFACES TO BE BONDED TO THE PAD SHALL NOT BE METALIZED.

13. THE BEARING TOLERANCES SHALL MEET THOSE GIVEN IN AASHTO LRFD BRIDGE DESIGN SPECIFICATIONS 2007 EDITION AND ITS LATESTS REVISIONS.

14. THE ANCHOR BOLTS SHALL MEET THE REQUIREMENTS OF ASTM A 449, TYPE 1 CLASS 8.8. THEY SHALL BE GALVANIZED PER AASHTO M 232M/M 232.

BEARING DETAILS 3

PROJECT NAME: MORETOWN-MIDDLESEX
PROJECT NUMBER: BRS 0284(14)

FILE NAME: 78f219/struc./sf219sup
PROJECT LEADER: M. EVANS-MONGEON
DESIGNED BY: S.SCRIBNER

PLOT DATE: 15-JUN-2009
DRAWN BY: L. DUQUETTE
CHECKED BY: S. SCRIBNER
SHEET 52 OF 103

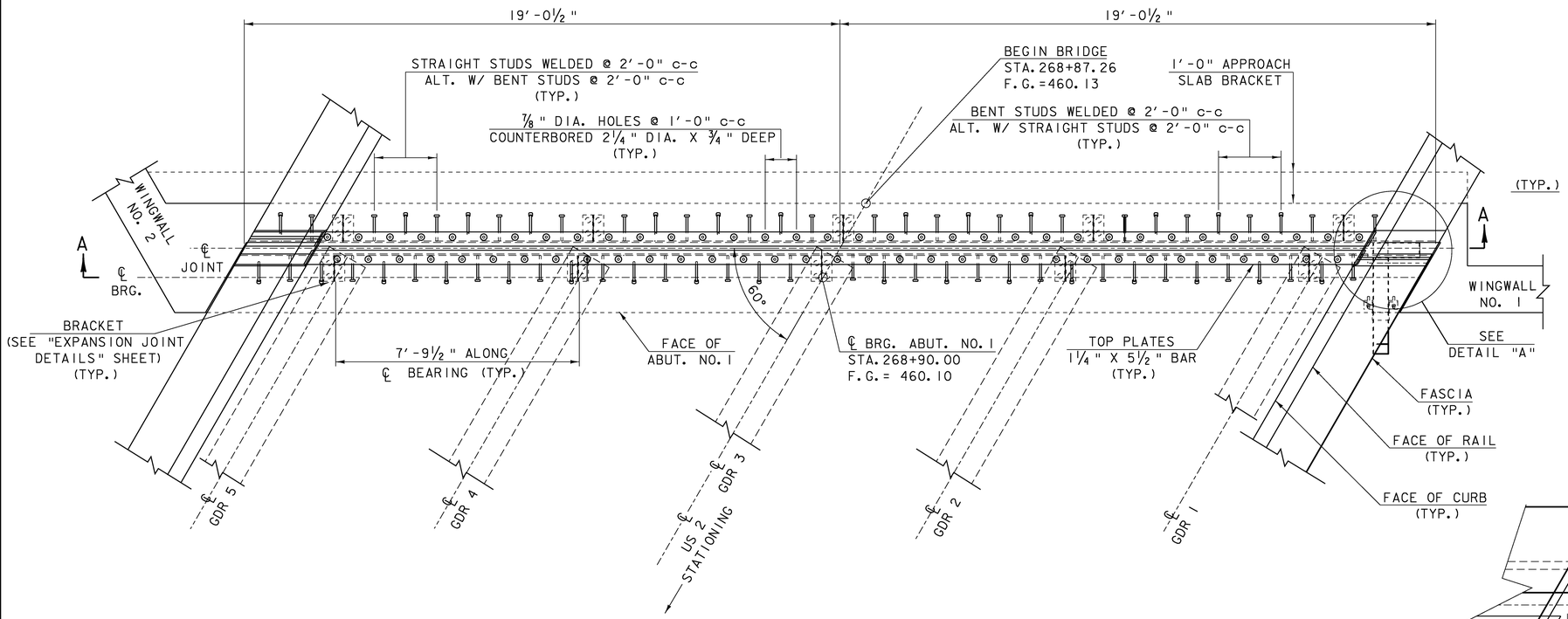

BRIDGE EXPANSION JOINT PLAN AT ABUTMENT NO. 1

0 1 2 3 4

SCALE: ½" = 1′-0"

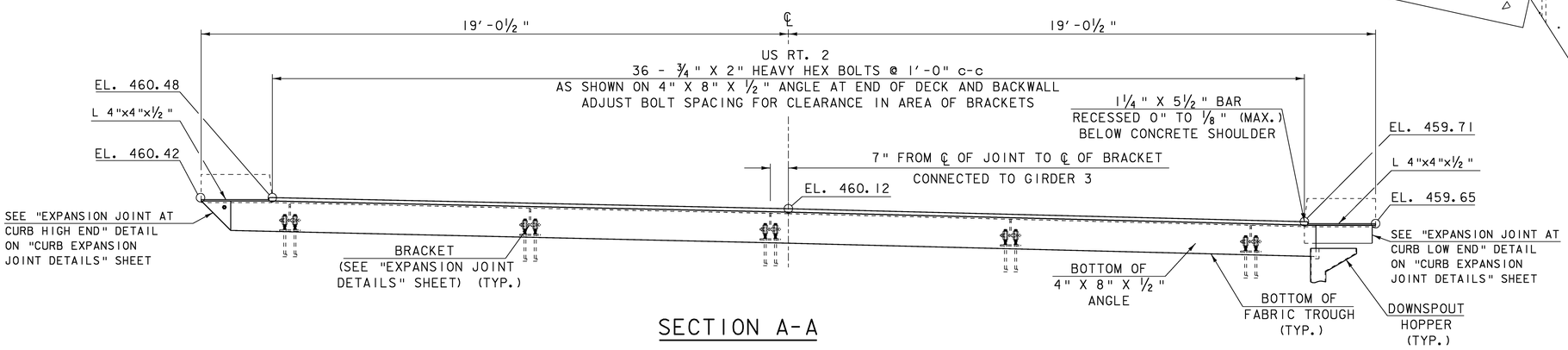

SECTION A-A

0 1 2 3 4

SCALE: ½" = 1′-0"

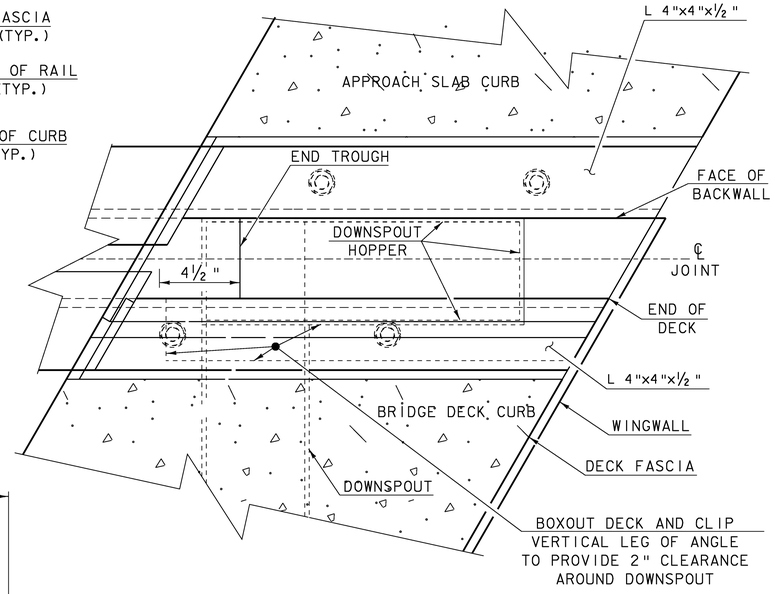

DETAIL "A"

0.5 0.25 0 0.25 0.5

SCALE: 3" = 1′-0"

EXPANSION JOINT PLAN ABUTMENT 1

PROJECT NAME: MORETOWN-MIDDLESEX
PROJECT NUMBER: BRS 0284(14)

FILE NAME: 78f219/struc./sf219sup
PROJECT LEADER: M. EVANS-MONGEON
DESIGNED BY: S.SCRIBNER

PLOT DATE: 15-JUN-2009
DRAWN BY: G. ROKES
CHECKED BY: S. SCRIBNER
SHEET 53 OF 103

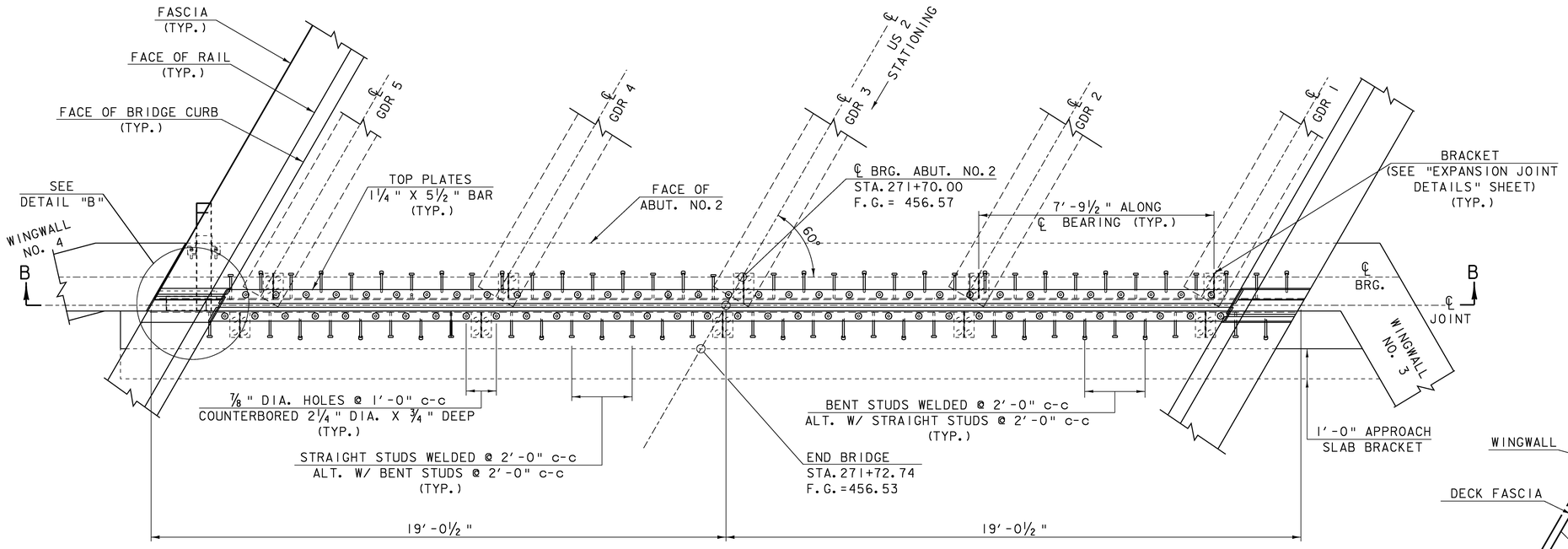

BRIDGE EXPANSION JOINT PLAN AT ABUTMENT NO. 2

1 0 1 2 3 4

SCALE: ½" = 1'-0"

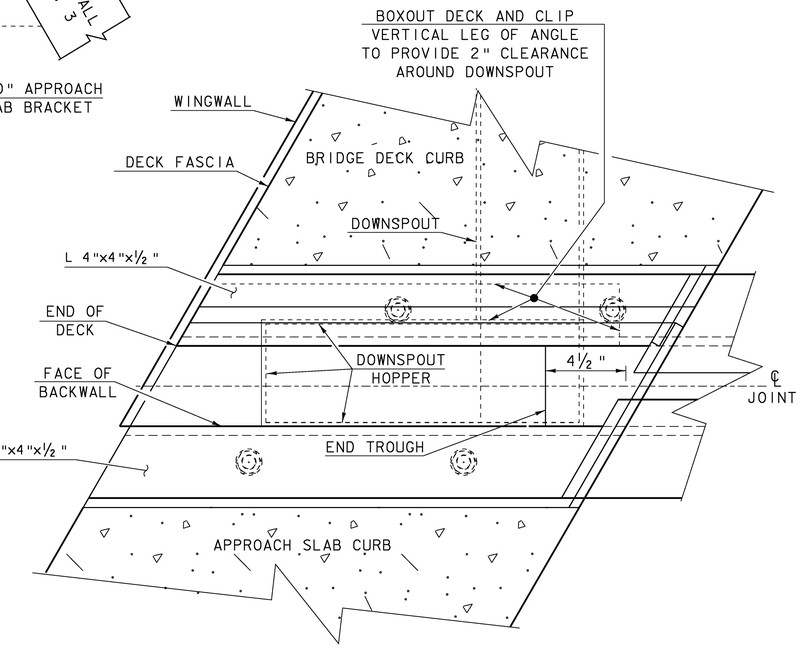

DETAIL "B"

0.5 0.25 0 0.25 0.5

SCALE: 3" = 1'-0"

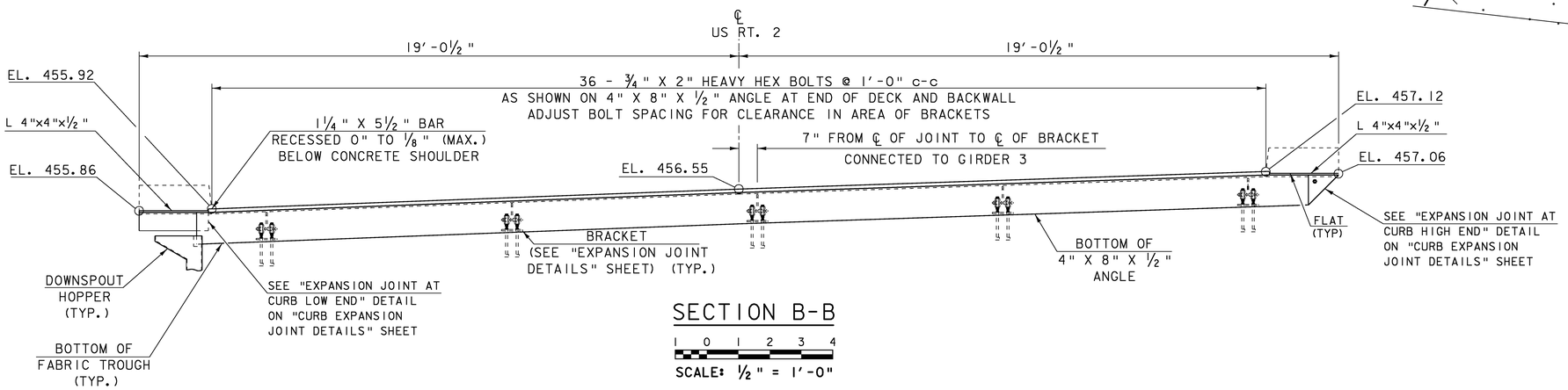

SECTION B-B

1 0 1 2 3 4

SCALE: ½" = 1'-0"

EXPANSION JOINT PLAN ABUTMENT 2

PROJECT NAME: MORETOWN-MIDDLESEX
PROJECT NUMBER: BRS 0284(14)

FILE NAME: 78f219/struc./sf219sup
PROJECT LEADER: M. EVANS-MONGEON
DESIGNED BY: S.SCRIBNER

PLOT DATE: 15-JUN-2009
DRAWN BY: G. ROKES
CHECKED BY: S. SCRIBNER

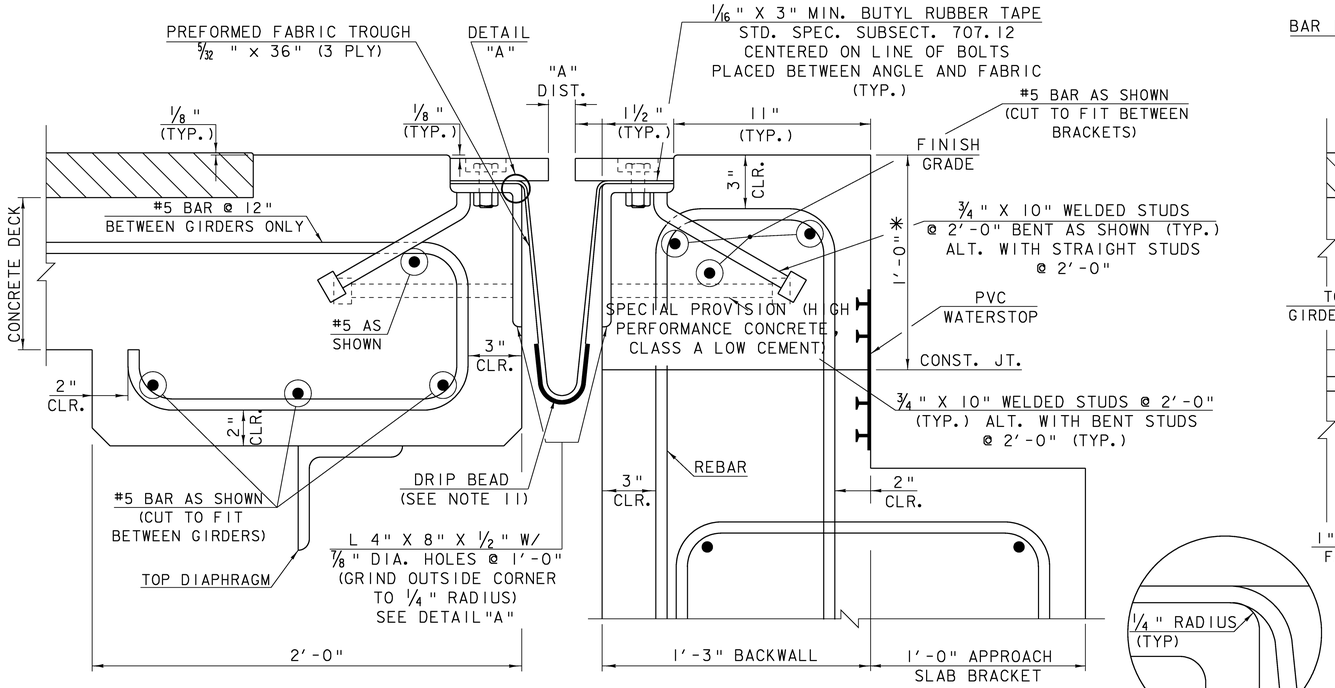

TYPICAL SECTION BETWEEN GIRDERS

(NORMAL TO ℄ BEARING)

DETAIL "A"
NTS

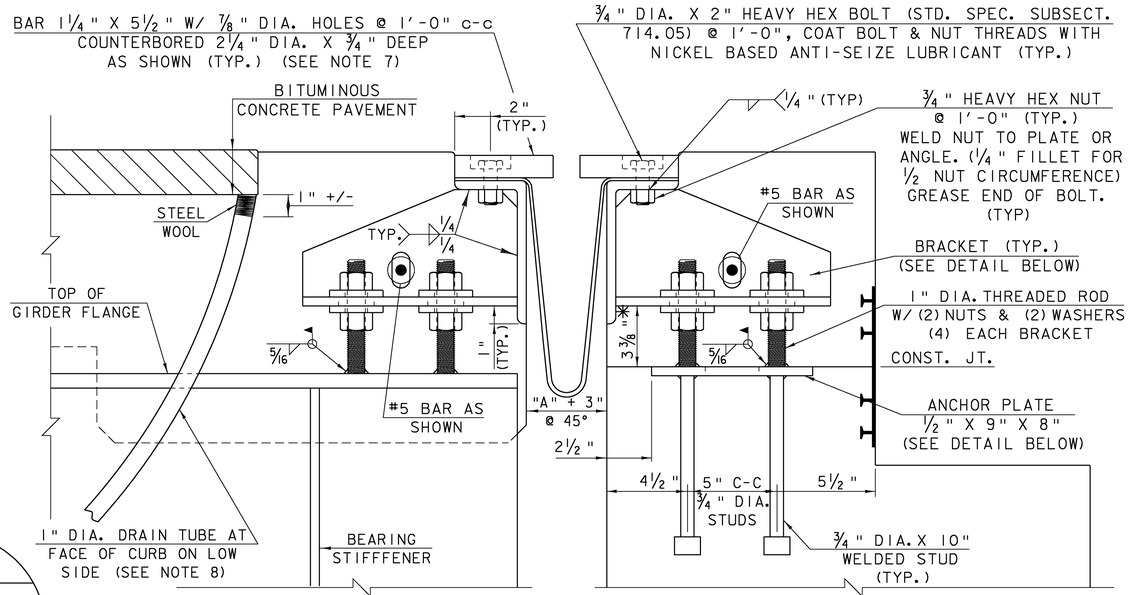

TYPICAL SECTION AT GIRDERS

(NORMAL TO ℄ BEARING)

* THESE DIMENSIONS ARE THEORETICAL AND MAY CHANGE DEPENDING UPON THE OUTCOME OF THE BEAM PROFILES.

1. DETAILS ON THIS SHEET ARE FOR ITEM 516.11 "BRIDGE EXPANSION JOINT, VERMONT".

2. PREFORMED FABRIC MATERIAL SHALL BE CONTINUOUS FOR THE FULL LENGTH OF THE JOINT.

3. THE FINAL FINISH OF THE EXPANSION DEVICE SHALL BE COVERED DURING THE PLACING OF BRIDGE DECK CONCRETE.

4. ALL STEEL COMPONENTS SHALL BE GALVANIZED OR METALIZED AND MEET THE REQUIREMENTS OF SUBSECTION 516.02. THREADED RODS SHALL CONFORM TO THE REQUIREMENTS OF SUBSECTION 714.04. THE 1/2 "x9"x6" ANCHOR PLATE AND WELDED STUD ASSEMBLY MAY BE SUPPLIED WITHOUT GALVANIZING OR METALIZING.

5. THE ITEM "BRIDGE EXPANSION JOINT, VERMONT" SHALL INCLUDE THE FABRICATION AND ERECTION OF THE COMPLETE JOINT ASSEMBLY INCLUDING ALL STEEL PLATES, BRACKETS, ANGLES, WELDED STUDS OR RODS, PREFORMED FABRIC DRAIN TROUGH MATERIAL AND PLASTIC DRAIN TUBES, BUTYL RUBBER TAPE AND ANY OTHER MISCELLANEOUS MATERIAL NECESSARY TO INSTALL JOINT.

6. THE 4" X 8" X 1/2 " ANGLES SHALL BE FURNISHED AS ONE CONTINUOUS PIECE. THE 1 1/4 " X 5 1/2 " BARS EACH SIDE OF THE JOINT SHALL BE PROVIDED IN TWO EQUAL LENGTHS.

7. FILL COUNTERBORED HOLES WITH HOT POURED JOINT SEALER (SUBSECTION 707.04) AFTER BOLT INSTALLATION. PAYMENT FOR THE WORK SHALL BE INCIDENTAL TO ITEM 516.11 "BRIDGE EXPANSION JOINT, VERMONT".

8. A 1" DIAMETER PLASTIC DRAIN TUBE (PER SUBSECTION 740.01) SHALL BE INSTALLED AS SHOWN AT THE FACE OF CURB. THE UPPER END IS TO BE PLUGGED WITH STEEL WOOL AND THE LOWER END IS TO EXTEND BELOW THE BOTTOM OF THE ADJACENT BEAM. STEEL WOOL MATERIAL WILL BE APPROVED BY THE ENGINEER. THE DRAIN TUBES SHALL BE FASTENED TO THE BEAMS USING A METHOD APPROVED BY THE ENGINEER.

9. THE EXPANSION JOINT SHALL BE SHOP ASSEMBLED AND SHIPPED AS ONE UNIT.

10. THE COST FOR P.V.C. WATERSTOP SHALL BE INCLUDED IN THE UNIT PRICE BID FOR ITEM 501.34, "CONCRETE, HIGH PERFORMANCE CLASS B". OTHER CONFIGURATIONS MAY BE USED UPON APPROVAL BY THE STRUCTURES ENGINEER.

11. A DRIP BEAD OF 1/4 " X 7" STRIP OF PREFORMED FABRIC MATERIAL SHALL BE CEMENTED TO THE BOTTOM OF THE FABRIC TROUGH USING AN ADHESIVE APPROVED BY THE MANUFACTURER. THE DRIP BEAD SHALL BE APPLIED 1" FROM THE DOWNSPOUT END OF THE TROUGH.

12. FABRIC TROUGH SHALL BE THOROUGHLY CLEANED AND FLUSHED AFTER PAVING OPERATION.

13. PRIOR TO GALVANIZING OR METALIZING, ALL CORNERS AND EDGES OF STEEL PLATES, SHAPES, ETC., SHALL BE GROUND TO A 1.6mm (1/16 INCH) RADIUS.

14. TEMPORARY SHIPPING ATTACHMENTS SHALL BE ATTACHED BY BOLTING; WELDING WILL NOT BE PERMITTED.

15. PROJECTING THREADS OF THE 3/4 " BOLTS IN THE JOINT SHALL BE GREASED BY THE CONTRACTOR PRIOR TO PLACING ADJACENT CONCRETE. THIS WILL FACILITATE BOLT REMOVAL IF REQUIRED IN THE FUTURE.

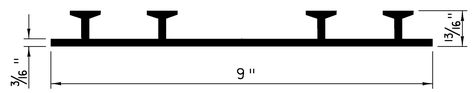

P.V.C. WATERSTOP FOR CONSTRUCTION JOINTS

NOT TO SCALE

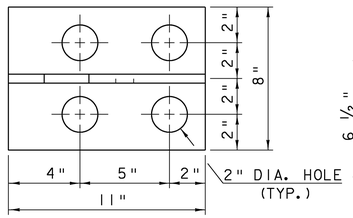

BRACKET PLAN

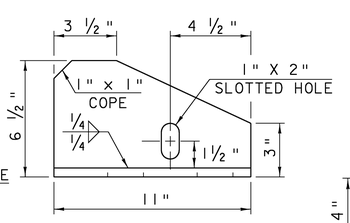

BRACKET ELEVATION

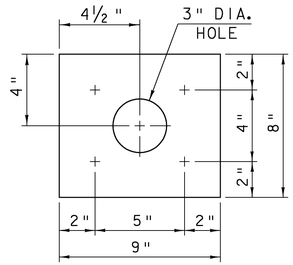

ANCHOR PLATE PLAN

(GALVANIZING OR METALIZING NOT REQUIRED)

ALL PLATES 1/2 "

TEMP	"A" DIST.	"B" DIST.
0°F	2 3/4"	2 1/4"
15°F	2 9/16"	2 1/16"
30°F	2 7/16"	1 15/16"
45°F	2 1/4"	1 3/4"
68°F	2"	1 1/2"
75°F	1 15/16"	1 7/16"
90°F	1 3/4"	1 1/4"
105°F	1 5/8"	1 1/8"

"A" IS THE SETTING BEFORE DEAD LOADS ARE IN PLACE.

"B" IS THE FINAL SETTING AFTER ALL DEAD LOADS ARE IN PLACE.

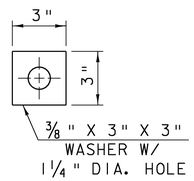

WASHER FOR BRACKET

0.5 0.25 0 0.25 0.5

SCALE: 3" = 1'-0"

EXPANSION JOINT DETAILS

PROJECT NAME: MORETOWN-MIDDLESEX
PROJECT NUMBER: BRS 0284(14)

FILE NAME: 78f219/struc./sf219sup
PROJECT LEADER: M. EVANS-MONGEON
DESIGNED BY: S.SCRIBNER
PLOT DATE: 15-JUN-2009
DRAWN BY: G.ROKES
CHECKED BY: S. SCRIBNER
SHEET 55 OF 103

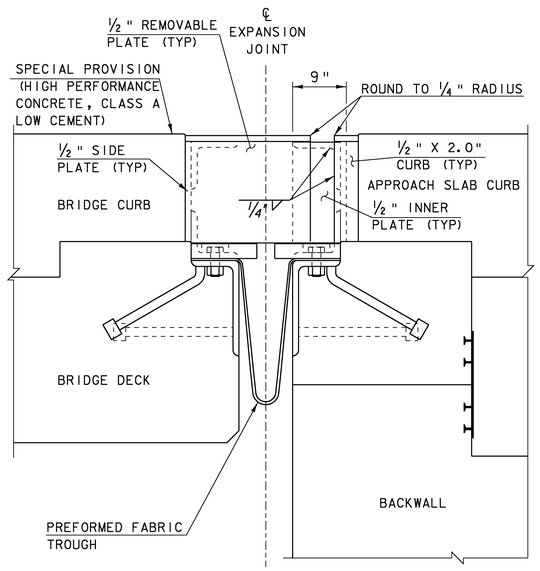

SECTION A-A

NOT TO SCALE

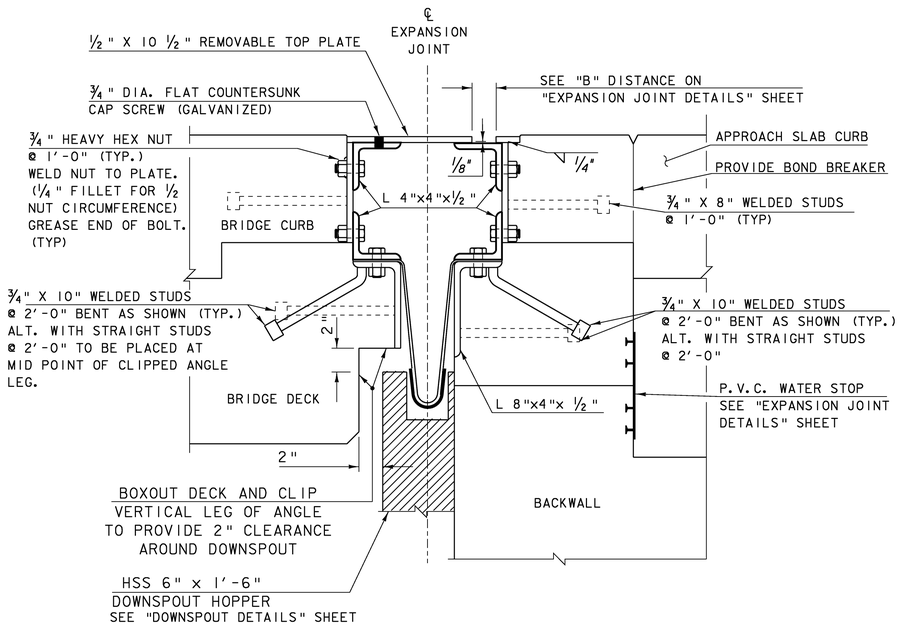

SECTION B-B

NOT TO SCALE

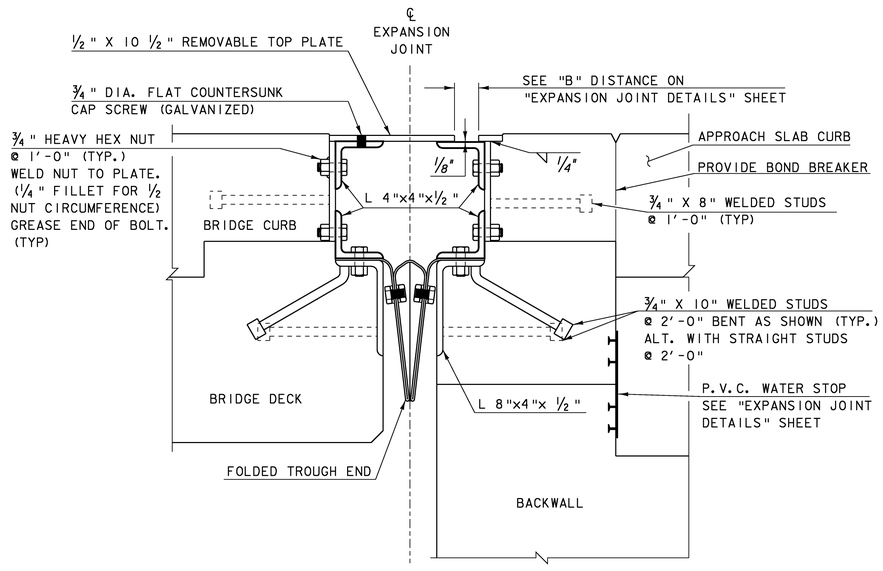

SECTION C-C

NOT TO SCALE

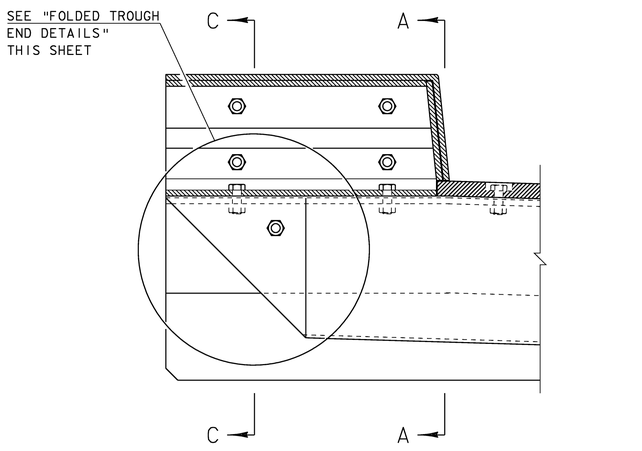

EXPANSION JOINT AT CURB HIGH END

NOT TO SCALE

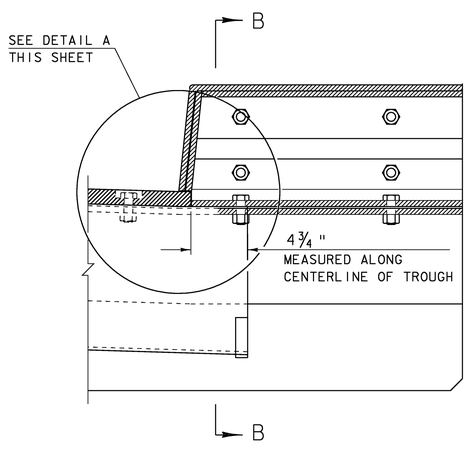

EXPANSION JOINT AT CURB LOW END

NOT TO SCALE

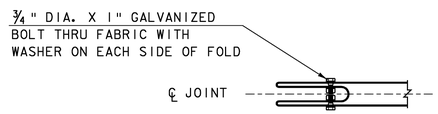

PLAN VIEW TROUGH FOLD

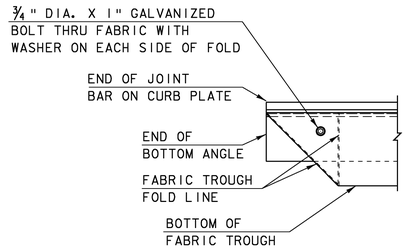

FOLDED TROUGH END DETAILS

NOT TO SCALE

NOTES:

1. TROUGH SHALL BE FOLDED ON HIGH SIDE OF BRIDGE ONLY
2. BOLTS, NUTS AND WASHERS FOR FOLD SHALL MEET REQUIREMENTS OF SUBSECTION 714.04 AND BE GALVANIZED PER AASHTO M 295, CLASS 50, TYPE 1.

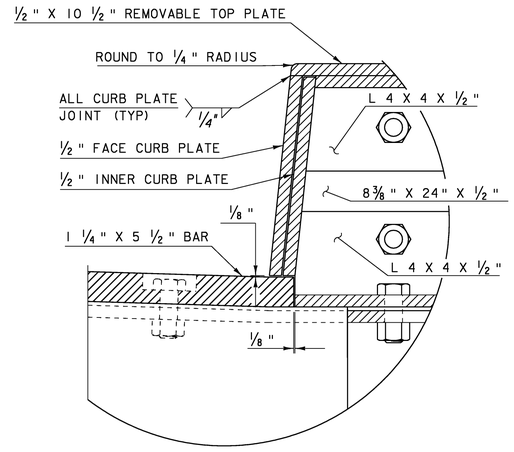

DETAIL A

NOT TO SCALE

CURB EXPANSION JOINT DETAILS

PROJECT NAME:	MORETOWN-MIDDLESEX
PROJECT NUMBER:	BRS 0284(14)

FILE NAME:	78f219/struc./sf219sup	PLOT DATE:	15-JUN-2009
PROJECT LEADER:	M. EVANS-MONGEON	DRAWN BY:	G.ROKES
DESIGNED BY:	S.SCRIBNER	CHECKED BY:	S. SCRIBNER
		SHEET	56 OF 103

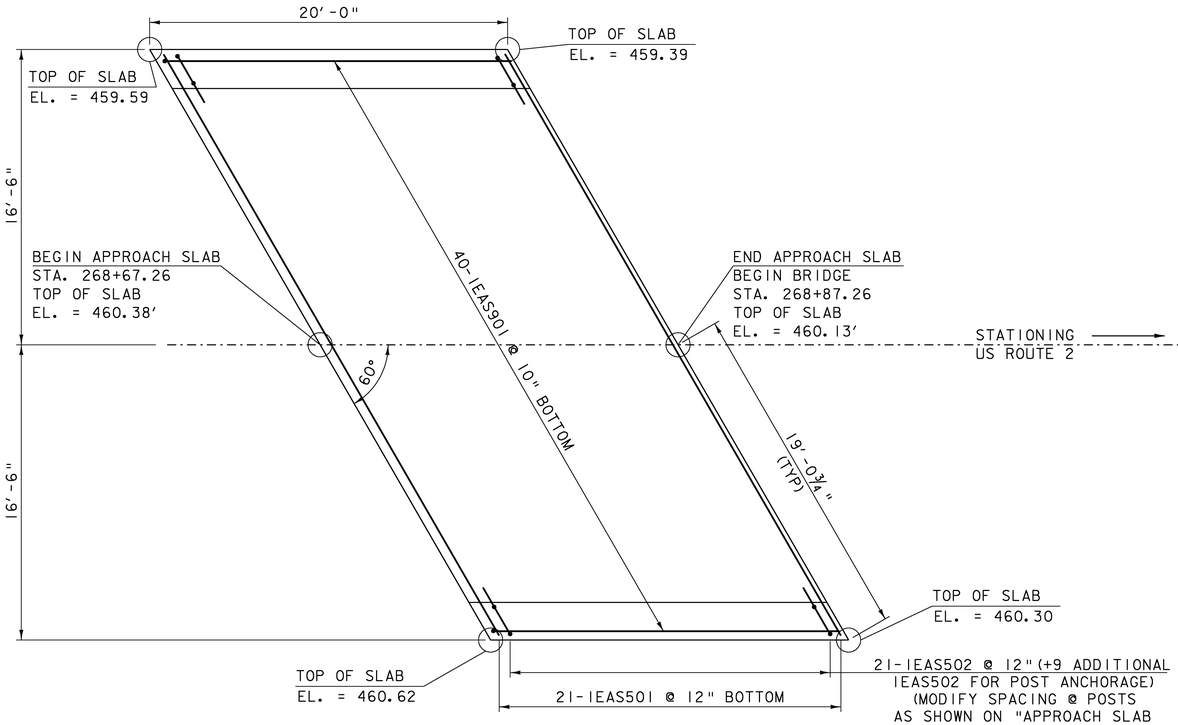

APPROACH SLAB No. 1 PLAN

SCALE ¼" = 1'-0

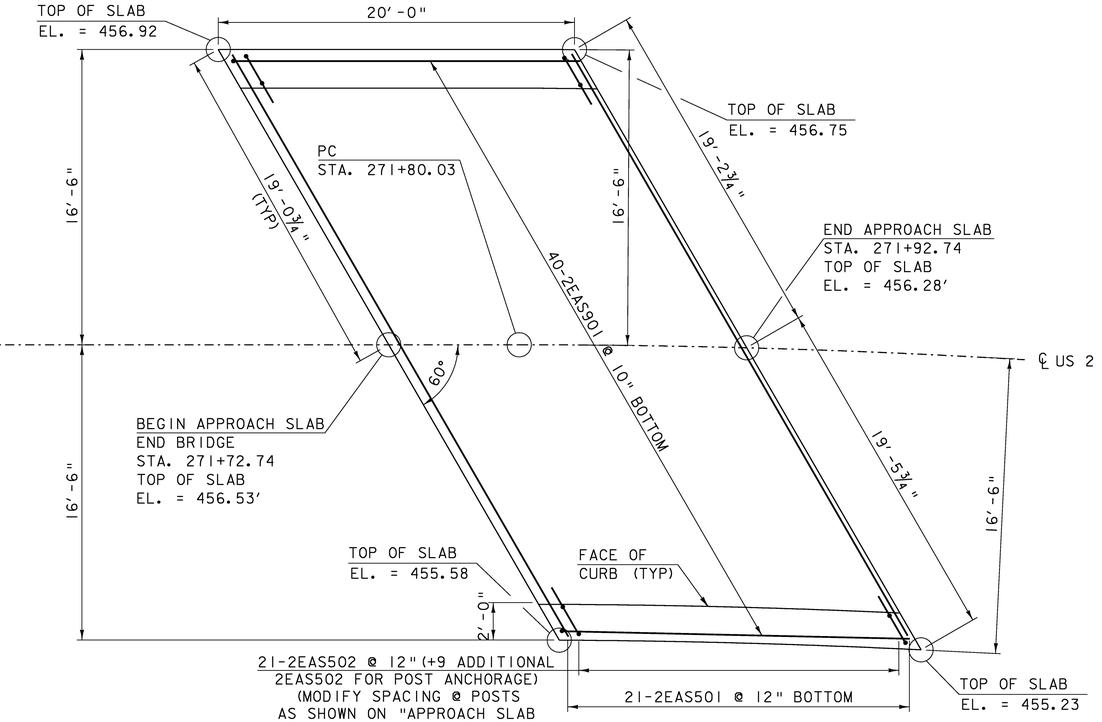

APPROACH SLAB No. 2 PLAN

SCALE ¼" = 1'-0

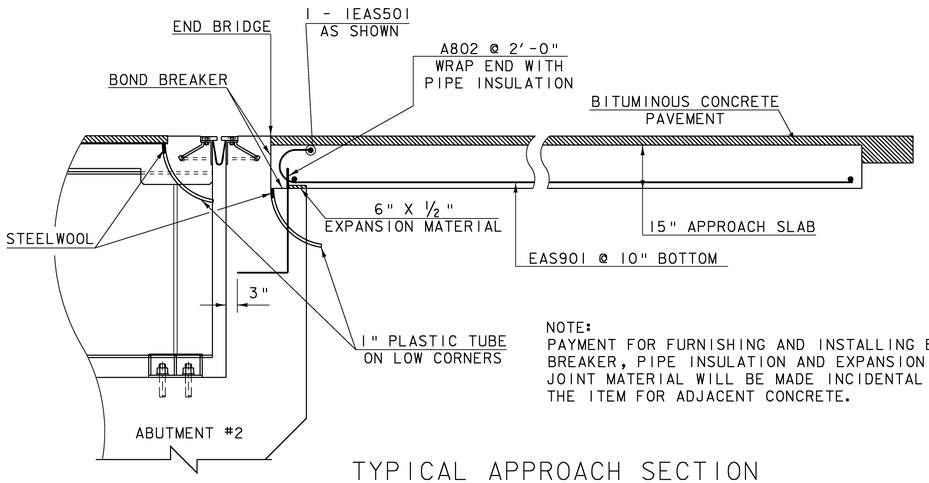

NOTE:
PAYMENT FOR FURNISHING AND INSTALLING BOND BREAKER, PIPE INSULATION AND EXPANSION JOINT MATERIAL WILL BE MADE INCIDENTAL TO THE ITEM FOR ADJACENT CONCRETE.

TYPICAL APPROACH SECTION

NOT TO SCALE

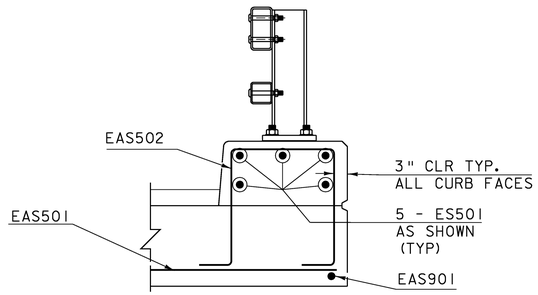

TYPICAL APPROACH SLAB CURB SECTION

NOT TO SCALE

ALL REINFORCING STEEL SHALL BE EPOXY COATED

WATERPROOFING SHALL NOT BE APPLIED TO APPROACH SLABS

NOTE:
NF = NEAR FACE
FF = FAR FACE
EF = EACH FACE
▲ = CUT TO FIT IN FIELD
3" CLEAR, UNLESS OTHERWISE SPECIFIED ON THE PLANS.
2'-2" BAR LAP UNLESS OTHERWISE SPECIFIED ON THE PLANS.

APPROACH SLAB DETAILS

PROJECT NAME: MORETOWN-MIDDLESEX
PROJECT NUMBER: BRS 0284(14)

FILE NAME: 78f219/struc./sf219sup
PROJECT LEADER: M. EVANS-MONGEON
DESIGNED BY: S.SCRIBNER
PLOT DATE: 15-JUN-2009
DRAWN BY: L. DUQUETTE
CHECKED BY: S. SCRIBNER
SHEET 57 OF 103

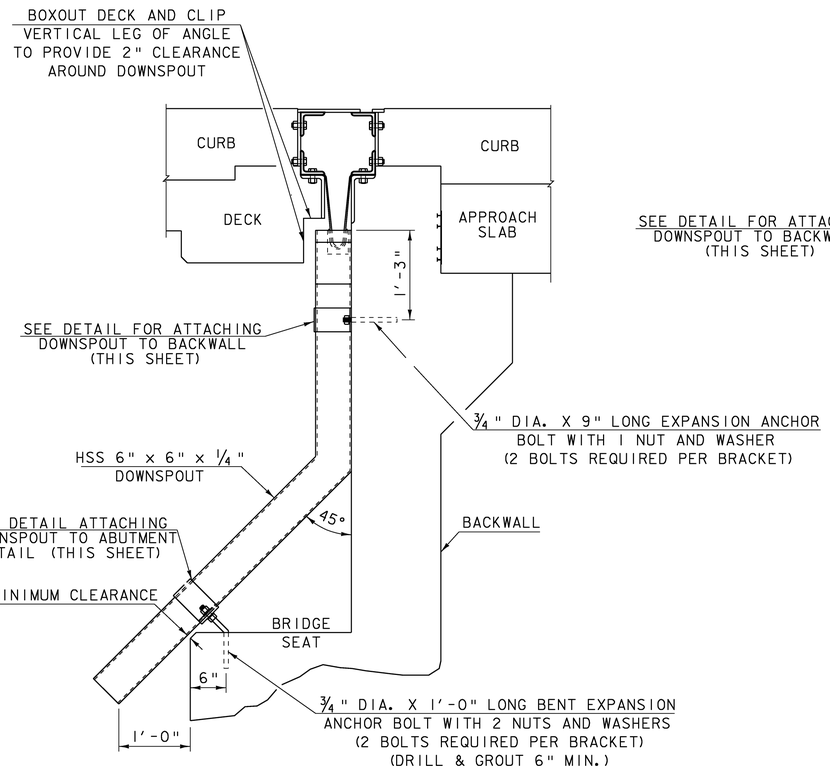

DOWNSPOUT SIDE ELEVATION

SCALE: 1" = 1'-0"

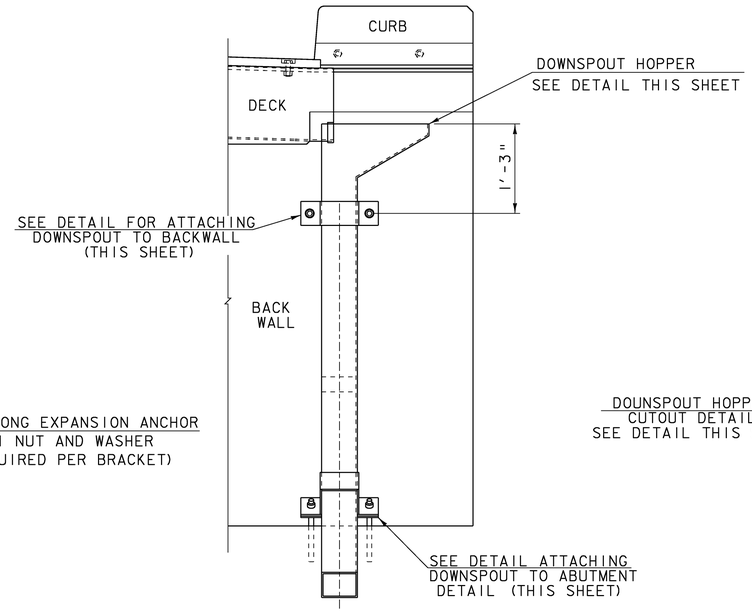

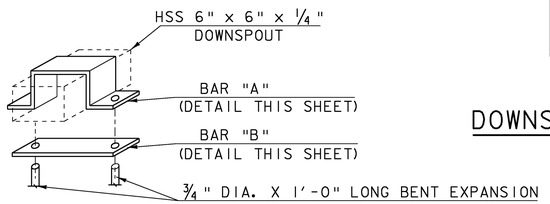

DOWNSPOUT NOTES

1. HOLLOW STRUCTURAL STEEL TUBING SHALL CONFORM TO ASTM A500 OR A501.
2. ALL PLATES, BARS, AND ANGLES SHALL CONFORM TO AASHTO M 270M/M 270 GR 36.
3. DOWNSPOUTS SHALL BE GALVANIZED IN ACCORDANCE WITH ASTM A123 AFTER FABRICATION. AFTER GALVANIZATION THEY SHALL BE PAINTED. THE PAINT SHALL BE BROWN COLOR CHIP #20059.
4. ALL BOLTS AND RELATED HARDWARE SHALL BE ASTM A307 AND SHALL BE GALVANIZED IN ACCORDANCE WITH ASTM A153 (AASHTO M 232M/M 232).
5. IN AREAS WHERE THE GALVANIZING HAS BEEN REMOVED FROM THE DOWNSPOUTS EITHER BY CUTTING, BURNING, WELDING, PLACING, OR ANY OTHER MEANS, IT SHALL BE REPAIRED BY THOROUGHLY CLEANING THE DAMAGED AREAS WITH A WIRE BRUSH AND PAINTING THE DAMAGED AREAS WITH TWO COATS OF AN APPROVED SEALANT.
6. ALL MATERIALS AND INSTALLATION COSTS FOR THE DOWNSPOUTS, INCLUDING STEEL TUBING, GALVANIZING, RELATED HARDWARE, AND ANCHOR BOLTS SHALL BE PAID FOR UNDER ITEM 506.60 "STRUCTURAL STEEL". PAINTING WILL BE PAID FOR UNDER THE SECION 513 ITEMS IN THE CONTRACT.
7. ALL REFERENCES TO PLATES ON THIS SHEET ARE 1/4" THICK UNLESS OTHERWISE NOTED.

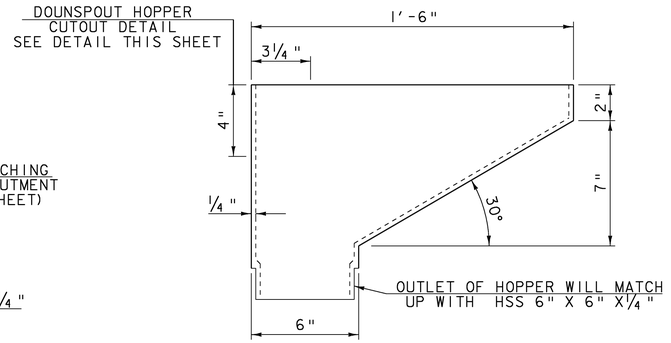

DOWNSPOUT HOPPER FRONT DETAIL

0.5 0.25 0 0.25 0.5

SCALE: 3" = 1'-0"

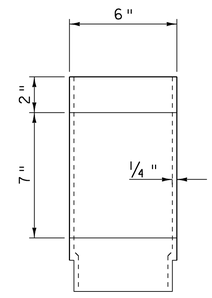

DOWNSPOUT HOPPER SIDE DETAIL

0.5 0.25 0 0.25 0.5

SCALE: 3" = 1'-0"

DETAIL ATTACHING DOWNSPOUT TO ABUTMENT

NTS

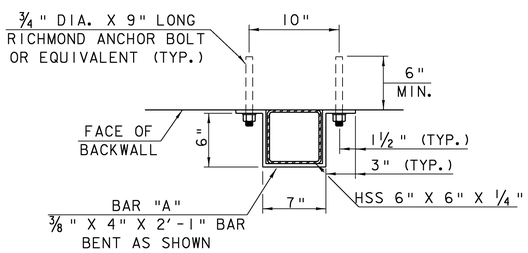

DETAIL FOR ATTACHING DOWNSPOUT TO BACKWALL PLAN VIEW

1 0 1 2

SCALE: 1 1/2" = 1'-0"

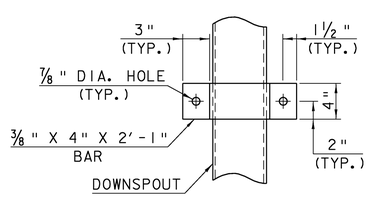

ELEVATION VIEW OF BAR "A"

1 0 1 2

SCALE: 1 1/2" = 1'-0"

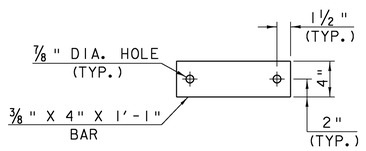

ELEVATION VIEW OF BAR "B"

1 0 1 2

SCALE: 1 1/2" = 1'-0"

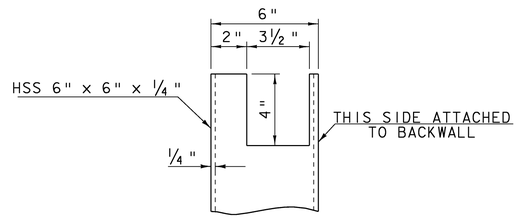

DOWNSPOUT HOPPER CUTOUT DETAIL

0.5 0.25 0 0.25 0.5

SCALE: 3" = 1'-0"

DOWNSPOUT DETAILS

PROJECT NAME: MORETOWN-MIDDLESEX
PROJECT NUMBER: BRS 0284(14)

FILE NAME: 78f219/struc./sf219sup
PROJECT LEADER: M. EVANS-MONGEON
DESIGNED BY: S.SCRIBNER
PLOT DATE: 15-JUN-2009
DRAWN BY: G.ROKES
CHECKED BY: S. SCRIBNER
SHEET 58 OF 103

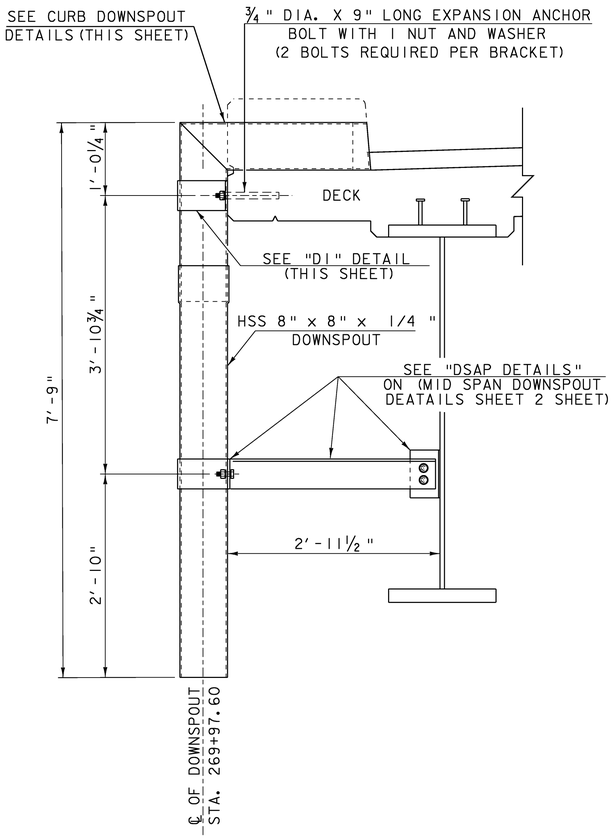

CURB CUT WITH DOWNSPOUT

SIDE VIEW

SCALE 1" = 1'-0"

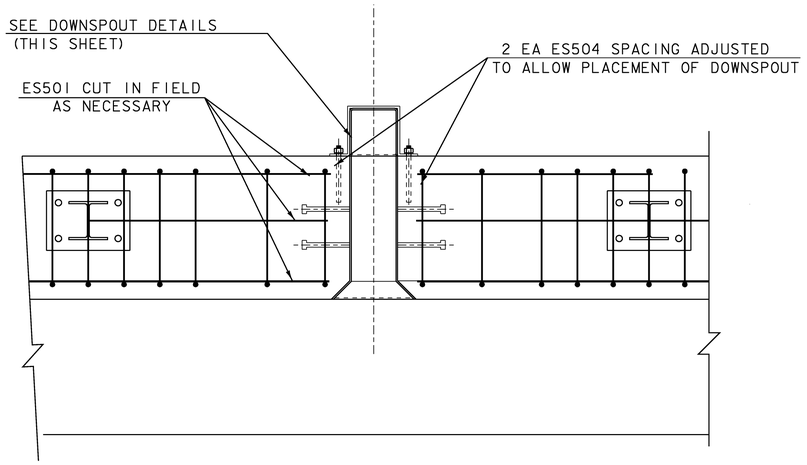

CURB CUT WITH DOWNSPOUT PLAN VIEW

SCALE 1" = 1'-0"

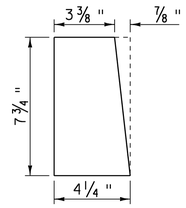

PLATE "B" DETAIL

NTS

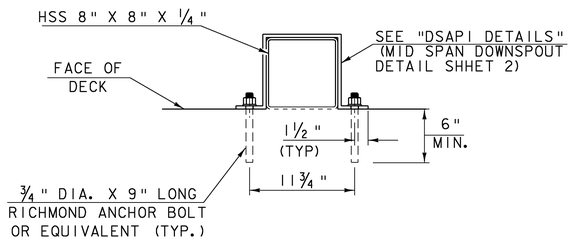

D1 DETAIL PLAN VIEW

SCALE: 1½" = 1'-0"

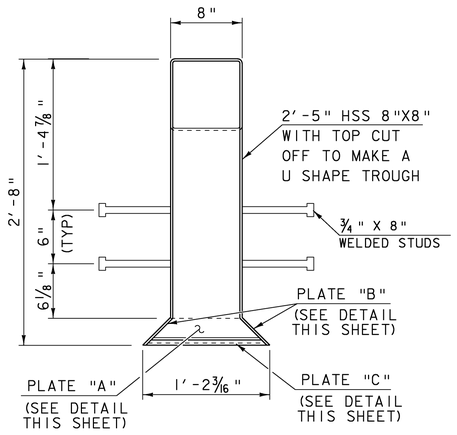

CURB DOWNSPOUT DETAIL

PLAN VIEW

SCALE 1½" = 1'-0"

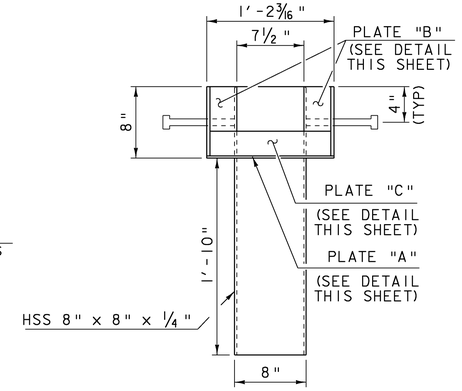

CURB DOWNSPOUT DETAIL

FRONT VIEW

SCALE 1½" = 1'-0"

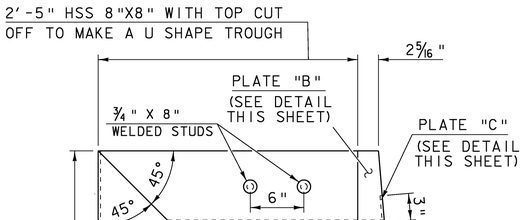

CURB DOWNSPOUT DETAIL

SIDE VIEW

SCALE 1½" = 1'-0"

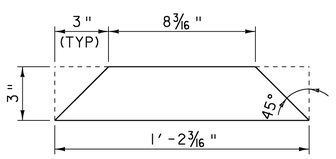

PLATE "A" DETAIL

NTS

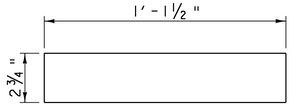

PLATE "C" DETAIL

NTS

NOTES:

1. SEE DOWNSPOUT NOTES ON "DOWNSPOUT DETAILS" SHEET
2. ALL REFERENCES TO PLATES ON THIS SHEET ARE ¼" THICK UNLESS OTHERWISE NOTED

MID SPAN DOWNSPOUT DETAILS 1

PROJECT NAME:	MORETOWN-MIDDLESEX
PROJECT NUMBER:	BRS 0284(14)
FILE NAME: 78f219/struc./sf219sup	PLOT DATE: 15-JUN-2009
PROJECT LEADER: M. EVANS-MONGEON	DRAWN BY: G.ROKES
DESIGNED BY: S.SCRIBNER	CHECKED BY: S. SCRIBNER
	SHEET 59 OF 103

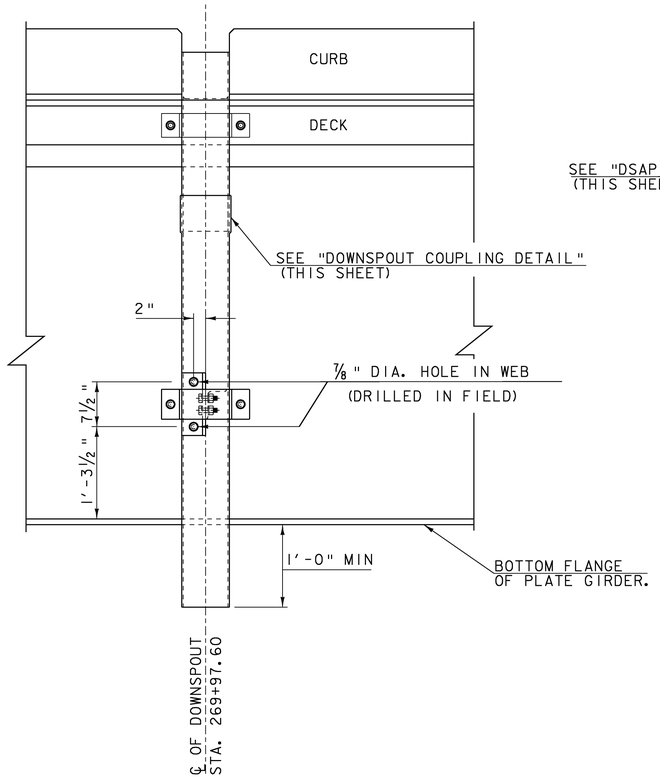

CURB DOWNSPOUT ATTACHMENT TO GIRDER LOCATION FRONT VIEW

SCALE 1" = 1'-0"
1 9 6 3 0 2

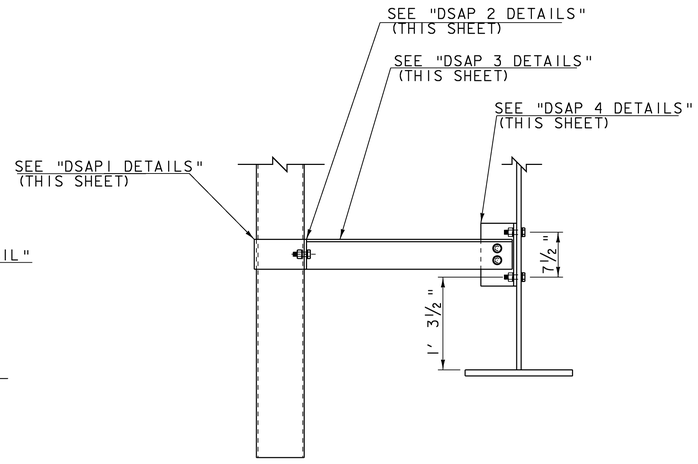

DSAP DETAILS

SCALE 1" = 1'-0"
1 9 6 3 0 2

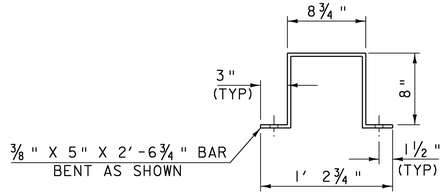

DSAP 1 DETAIL PLAN VIEW

SCALE 1 1/2" = 1'-0"
1 9 6 3 0

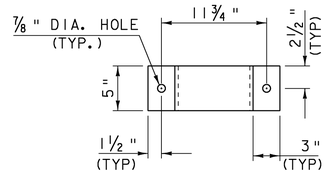

DSAP 1 DETAIL ELEVATION VIEW

SCALE 1 1/2" = 1'-0"
1 9 6 3 0

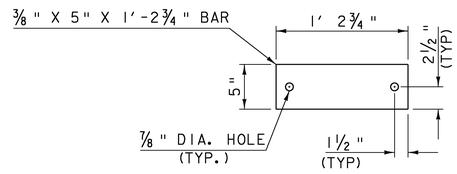

DSAP 2 DETAIL

SCALE 1 1/2" = 1'-0"
1 9 6 3 0

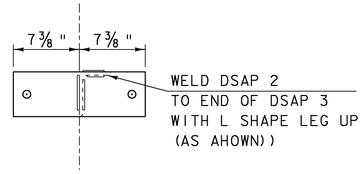

DSAP 2 WELD DETAIL

SCALE 1 1/2" = 1'-0"
1 9 6 3 0

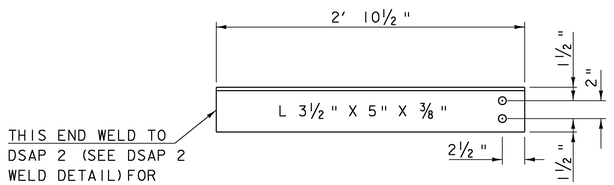

DSAP 3 DETAIL

SCALE 1 1/2" = 1'-0"
1 9 6 3 0

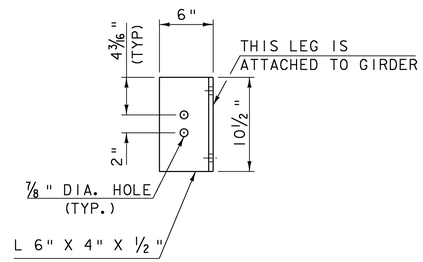

DSAP 4 DETAIL ELEVATION VIEW

SCALE 1 1/2" = 1'-0"
1 9 6 3 0

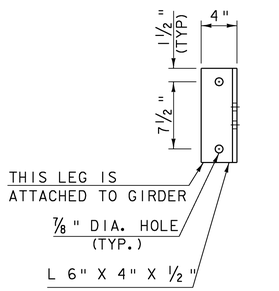

DSAP 4 DETAIL FRONT VIEW

SCALE 1 1/2" = 1'-0"
1 9 6 3 0

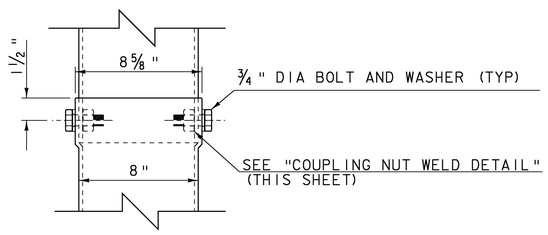

DOWNSPOUT COUPLING DETAIL

NTS

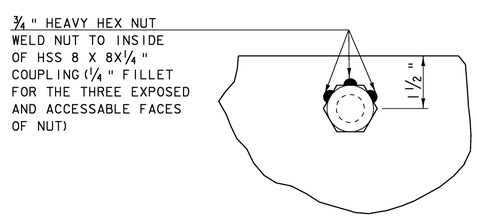

COUPLING NUT WELD DETAIL

NTS

MID SPAN DOWNSPOUT DETAILS 2

PROJECT NAME: MORETOWN-MIDDLESEX
PROJECT NUMBER: BRS 0284(14)

FILE NAME: 78f219/struc./sf219sup
PROJECT LEADER: M. EVANS-MONGEON
DESIGNED BY: S.SCRIBNER

PLOT DATE: 15-JUN-2009
DRAWN BY: G.ROKES
CHECKED BY: S. SCRIBNER
SHEET 60 OF 103

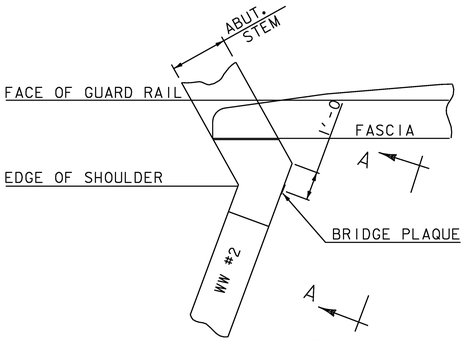

PLAN

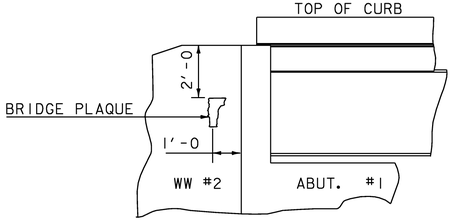

VIEW "A - A"

BRIDGE PLAQUE
(NOT TO SCALE)

THE BRIDGE PLAQUE WILL BE SUPPLIED BY THE AGENCY OF TRANSPORTATION AND SHALL BE INSTALLED BY THE CONTRACTOR AT ABUTMENT #1 ON THE RIGHT SIDE AS SHOWN OR AS DIRECTED BY THE ENGINEER.

PAYMENT FOR INSTALLATION OF THE BRIDGE PLAQUE SHALL BE INCIDENTAL TO THE ADJACENT CONCRETE.

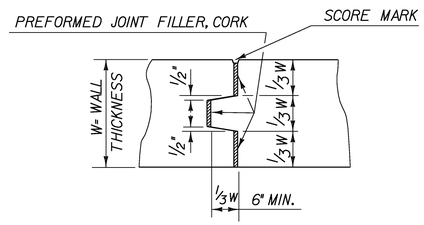

TYPICAL CONCRETE EXPANSION JOINT

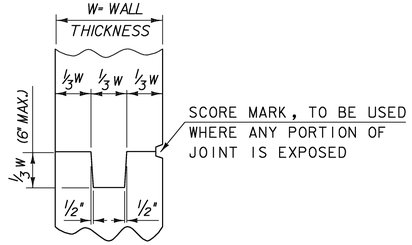

VERTICAL CONCRETE CONSTRUCTION JOINT

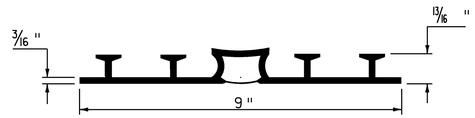

P.V.C. WATERSTOP FOR EXPANSION JOINTS
(NOT TO SCALE)

PAYMENT FOR THE P.V.C. WATERSTOP SHALL BE INCIDENTAL TO THE UNIT BID PRICE FOR THE ADJACENT CONCRETE.

OTHER CONFIGURATIONS OF WATERSTOP MAY BE USED UPON APPROVAL OF THE ENGINEER.

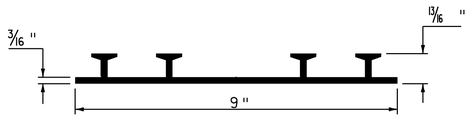

P.V.C. WATERSTOP FOR CONSTRUCTION JOINTS
(NOT TO SCALE)

PAYMENT FOR THE P.V.C. WATERSTOP SHALL BE INCIDENTAL TO THE UNIT BID PRICE FOR THE ADJACENT CONCRETE.

OTHER CONFIGURATIONS OF WATERSTOP MAY BE USED UPON APPROVAL OF THE ENGINEER.

CONCRETE CURB JOINT NOTES

1. CONCRETE CURBS MAY BE PLACED IN ONE CONTINUOUS OPERATION IF AN APPROVED SHRINKAGE REDUCING ADMIXTURE LISTED IN THE SPECIAL PROVISIONS IS USED WITH THE CONCRETE MIX DESIGN. PAYMENT FOR THE SHRINKAGE REDUCING ADMIXTURE WILL BE INCIDENTAL TO THE BRIDGE CURB CONCRETE ITEM.
2. IF THE CONTRACTOR CHOOSES NOT TO USE AN APPROVED SHRINKAGE REDUCING ADMIXTURE, THE CURBS SHALL BE CONSTRUCTED WITH CONSTRUCTION JOINTS SPACED AT A MAXIMUM OF 15'-0" CENTER TO CENTER AND 2'-0" MINIMUM FROM THE CENTER OF NEAREST BRIDGE RAILING POST.
3. ON MULTI-SPAN CONTINUOUS SUPERSTRUCTURES, REGARDLESS OF WHETHER APPROVED SHRINKAGE REDUCING ADMIXTURE IS USED, CURB JOINTS SHALL BE LOCATED OVER THE CENTERLINE OF PIERS AND 7'-0" EACH SIDE OF THE CENTERLINE OF EACH PIER.
4. WHEN CURB JOINTS ARE USED THE CURBS SHALL BE PLACED IN ALTERNATE SECTIONS WITH A MINIMUM OF 48 HOUR DELAY BETWEEN ADJACENT PLACEMENTS.
5. LONGITUDINAL REINFORCING SHALL BE CONTINUOUS THROUGH CURB CONSTRUCTION JOINTS. CURB STIRRUP BARS SHALL BE TURNED AS NECESSARY TO MAINTAIN COVER IN THE FLARED CURB ENDS.
6. THE JOINT SPACING AND DETAILS SHOWN SHALL APPLY TO SIDEWALKS WHEN SHOWN IN THE PLANS.

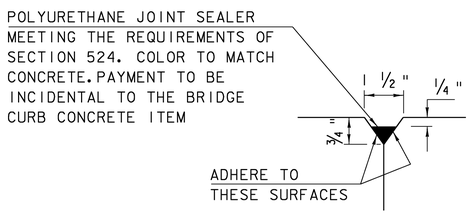

DETAIL "B"
NOT TO SCALE

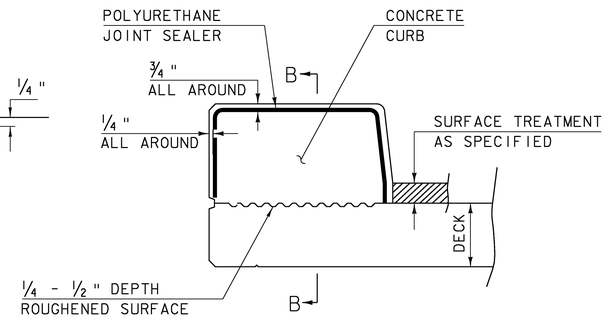

CONCRETE CURB JOINT SECTION
NOT TO SCALE

1. SEE TYPICAL CONCRETE CONSTRUCTION JOINT DETAIL FOR ADDITIONAL INFORMATION

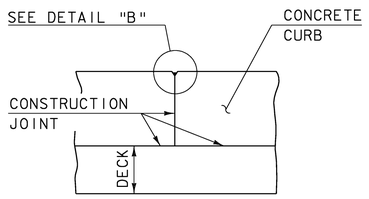

SECTION B - B
NOT TO SCALE

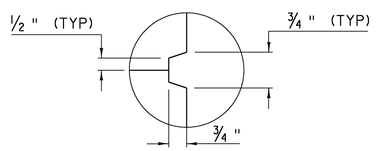

SCORE MARK DETAIL
NOT TO SCALE

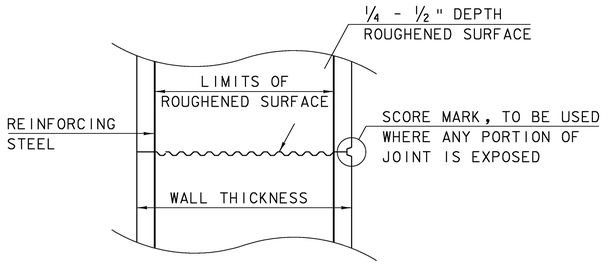

HORIZONTAL CONCRETE CONSTRUCTION JOINT
(NOT TO SCALE)

1. THE SURFACE OF THE CONCRETE CONSTRUCTION JOINTS SHALL BE CLEANED AND FREE OF LAITANCE.
2. IMMEDIATELY BEFORE NEW CONCRETE IS PLACED, ALL CONSTRUCTION JOINTS SHALL BE WETTED AND STANDING WATER REMOVED.

SUPERSTRUCTURE DETAILS 1

PROJECT NAME: MORETOWN-MIDDLESEX
PROJECT NUMBER: BRS 0284(14)

FILE NAME: 78f219/struc./sf219sup
PROJECT LEADER: M. EVANS-MONGEON
DESIGNED BY: S.SCRIBNER
PLOT DATE: 15-JUN-2009
DRAWN BY: L. DUQUETTE
CHECKED BY: S. SCRIBNER
SHEET 61 OF 103

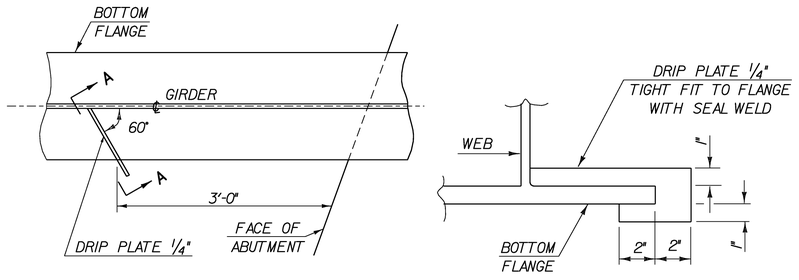

PLAN DRIP PLATE

SECTION A - A

NOTE: DRIP PLATES SHALL BE PLACED ON OUTSIDE EDGE OF FASCIA GIRDERS ON THE HIGH SIDE OF ALL PIERS AND ABUTMENTS OR AS INDICATED ON PROJECT PLANS.

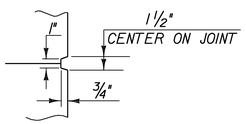

SCORE MARK DETAIL

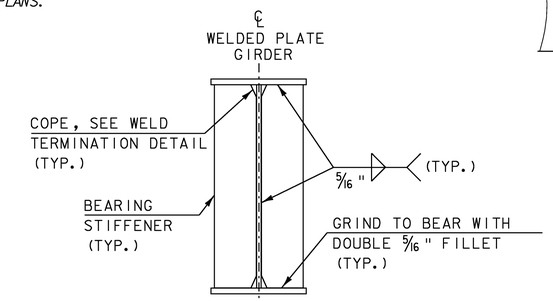

ABUTMENT CONNECTION PLATE, PIER STIFFENERS & JACKING STIFFENERS FOR WELDED PLATE GIRDERS

(NOT TO SCALE)

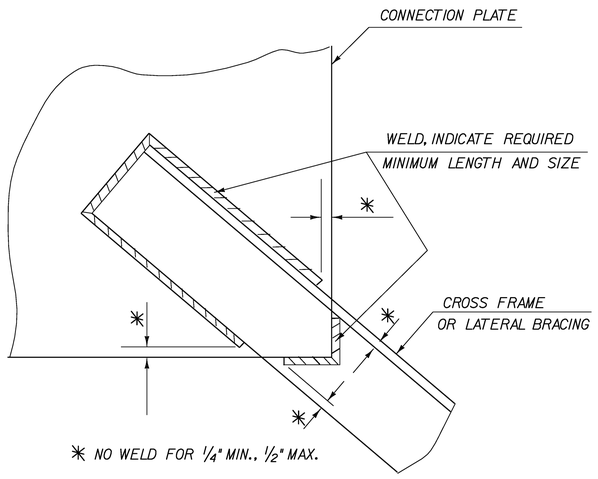

WELD LOCATION DETAIL AT CROSS FRAMES AND LATERAL BRACING

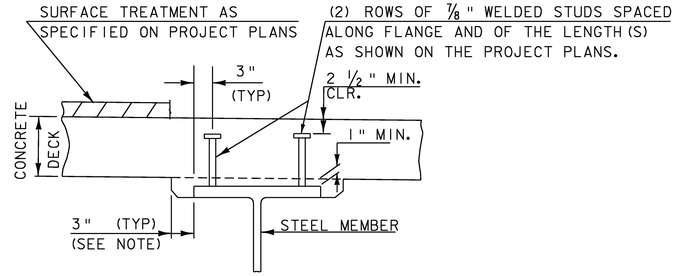

NOTE: THE 3" HORIZONTAL SECTION MAY BE ELIMINATED FOR FORMING SYSTEMS DESIGNED FOR THE CONSTRUCTION OF VERTICAL HAUNCHES. ANY VOIDS RESULTING FROM FORMING SYSTEM ELEMENTS SHALL BE FILLED WITH JOINT SEALER, POLYURETHANE MEETING THE REQUIREMENTS OF SECTION 524. THE COST OF THE JOINT SEALER, POLYURETHANE SHALL BE INCIDENTAL TO THE ADJACENT CONCRETE.

HAUNCH AND SHEAR CONNECTOR DETAIL

(NOT TO SCALE)

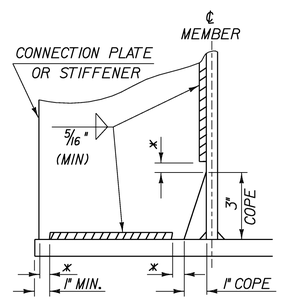

WELD TERMINATION AND COPING DETAILS FOR STEEL MEMBERS

* NO WELD FOR 3/8" MIN. 7/8" MAX. (EXCEPT MUST MAINTAIN 1" MINIMUM FROM EDGE OF FLANGE)

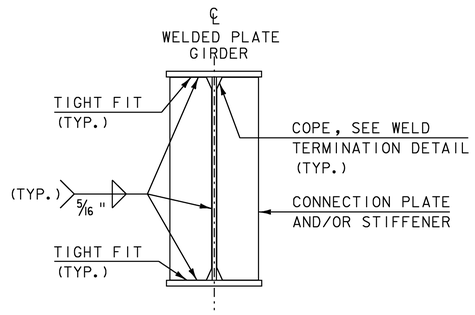

INTERMEDIATE CONNECTION PLATES AND/OR STIFFENERS FOR WELDED PLATE GIRDERS

(NOT TO SCALE)

SUPERSTRUCTURE DETAILS 2

PROJECT NAME: MORETOWN-MIDDLESEX
PROJECT NUMBER: BRS 0284(14)

FILE NAME: 78f219/struc./sf219sup
PROJECT LEADER: M. EVANS-MONGEON
DESIGNED BY: S.SCRIBNER
PLOT DATE: 15-JUN-2009
DRAWN BY: L. DUQUETTE
CHECKED BY: S. SCRIBNER
SHEET 62 OF 103

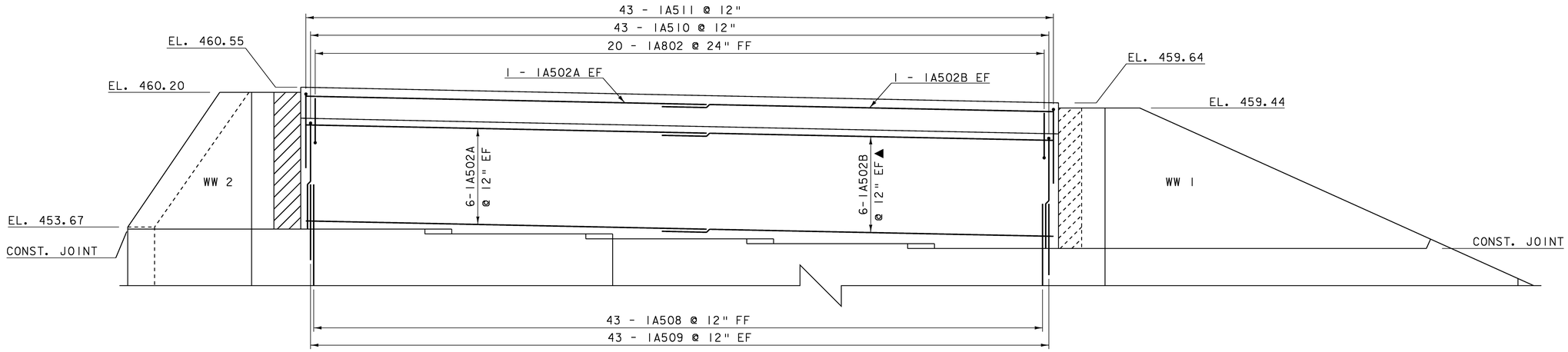

ABUTMENT #1 BACKWALL
ELEVATION VIEW

SCALE 3/8" = 1'-0

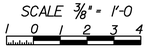

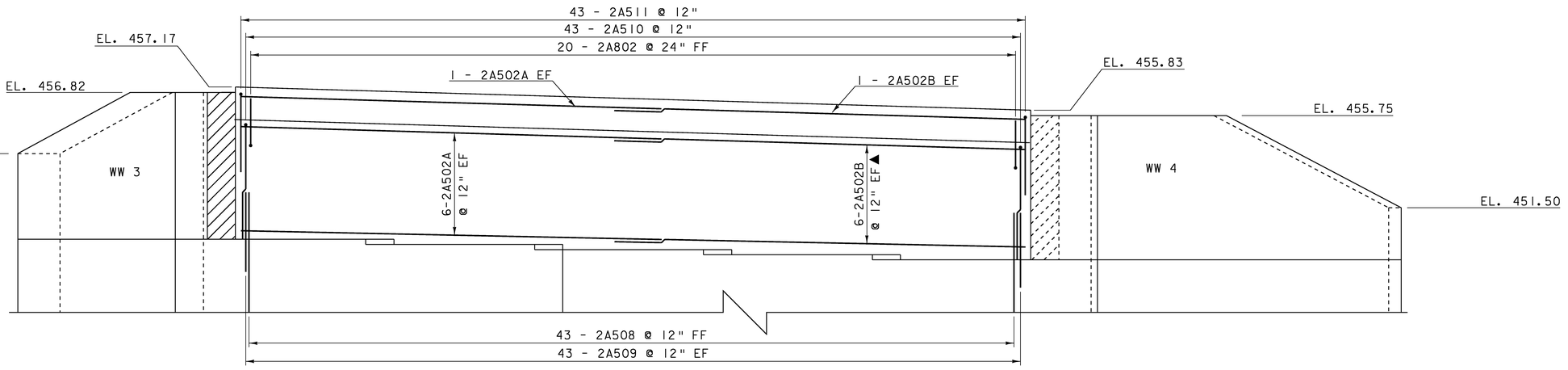

ABUTMENT #2 BACKWALL
ELEVATION VIEW

SCALE 3/8" = 1'-0

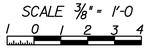

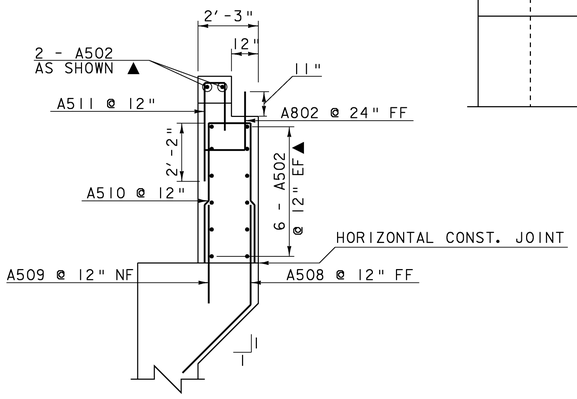

BACKWALL TYPICAL

SCALE 3/8" = 1'-0

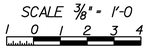

NOTE:

NF = NEAR FACE
FF = FAR FACE
EF = EACH FACE
▲ = CUT TO FIT IN FIELD
3" CLEAR, UNLESS OTHERWISE SPECIFIED ON THE PLANS.
2'-2" BAR LAP UNLESS OTHERWISE SPECIFIED ON THE PLANS.

BACKWALL DETAILS

PROJECT NAME: MORETOWN-MIDDLESEX
PROJECT NUMBER: BRS 0284(14)

FILE NAME: 78f219/struc./sf219sub
PROJECT LEADER: M. EVANS-MONGEON
DESIGNED BY: S. SCRIBNER
PLOT DATE: 15-JUN-2009
DRAWN BY: L. DUQUETTE
CHECKED BY: J. TREI
SHEET 63 OF 103

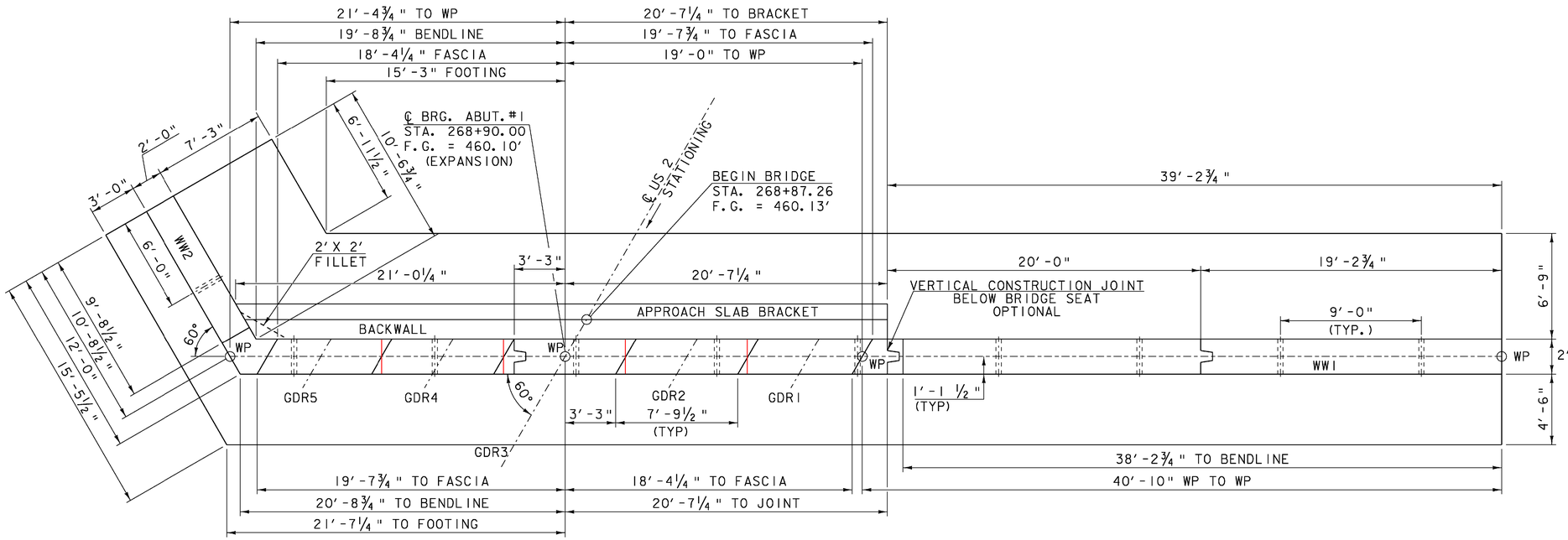

ABUTMENT NO. 1 PLAN

SCALE 1/4"= 1'-0

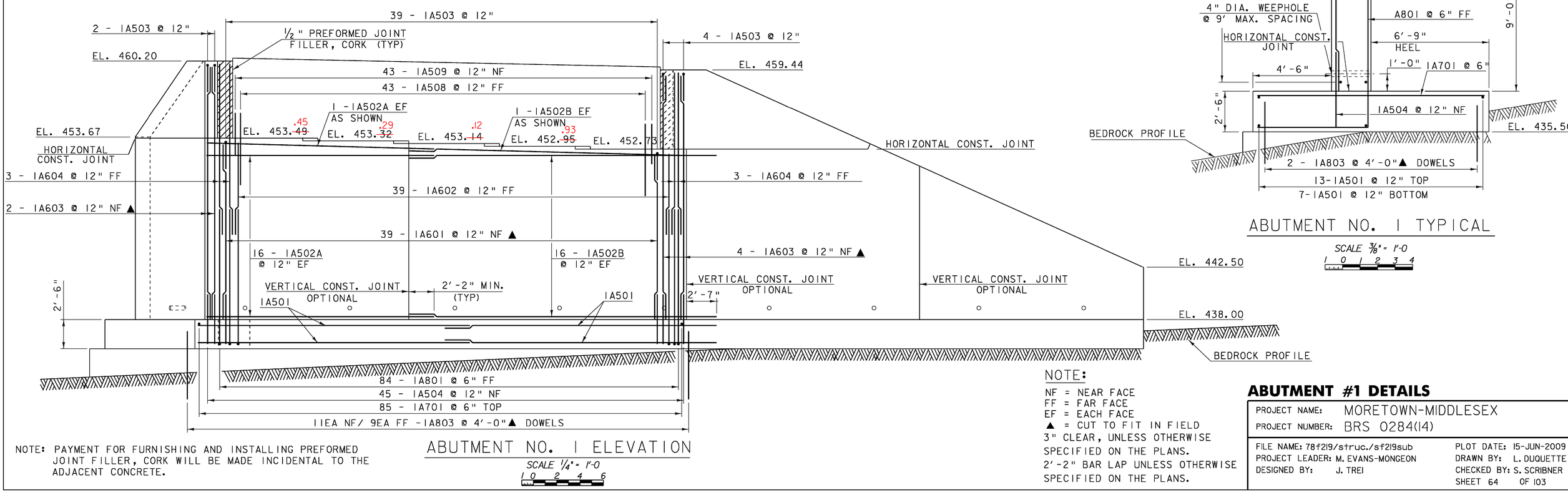

ABUTMENT NO. 1 ELEVATION

SCALE 1/4"= 1'-0

NOTE: PAYMENT FOR FURNISHING AND INSTALLING PREFORMED JOINT FILLER, CORK WILL BE MADE INCIDENTAL TO THE ADJACENT CONCRETE.

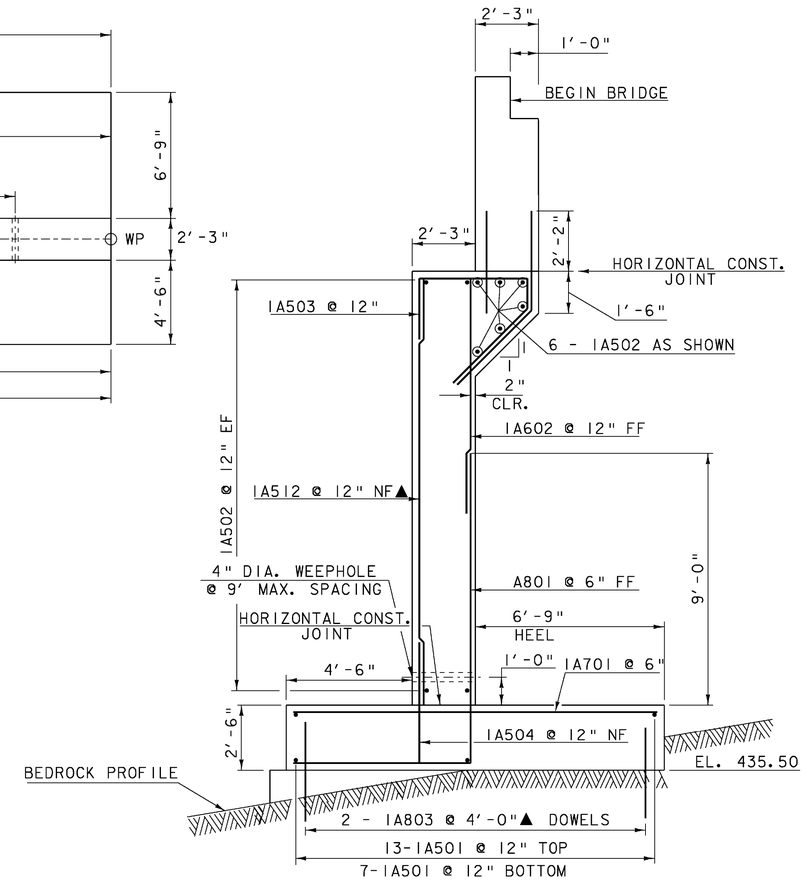

ABUTMENT NO. 1 TYPICAL

SCALE 3/8"= 1'-0

NOTE:
NF = NEAR FACE
FF = FAR FACE
EF = EACH FACE
▲ = CUT TO FIT IN FIELD
3" CLEAR, UNLESS OTHERWISE SPECIFIED ON THE PLANS.
2'-2" BAR LAP UNLESS OTHERWISE SPECIFIED ON THE PLANS.

ABUTMENT #1 DETAILS

PROJECT NAME: MORETOWN-MIDDLESEX
PROJECT NUMBER: BRS 0284(14)

FILE NAME: 78f219/struc./sf219sub
PROJECT LEADER: M. EVANS-MONGEON
DESIGNED BY: J. TREI
PLOT DATE: 15-JUN-2009
DRAWN BY: L. DUQUETTE
CHECKED BY: S. SCRIBNER
SHEET 64 OF 103

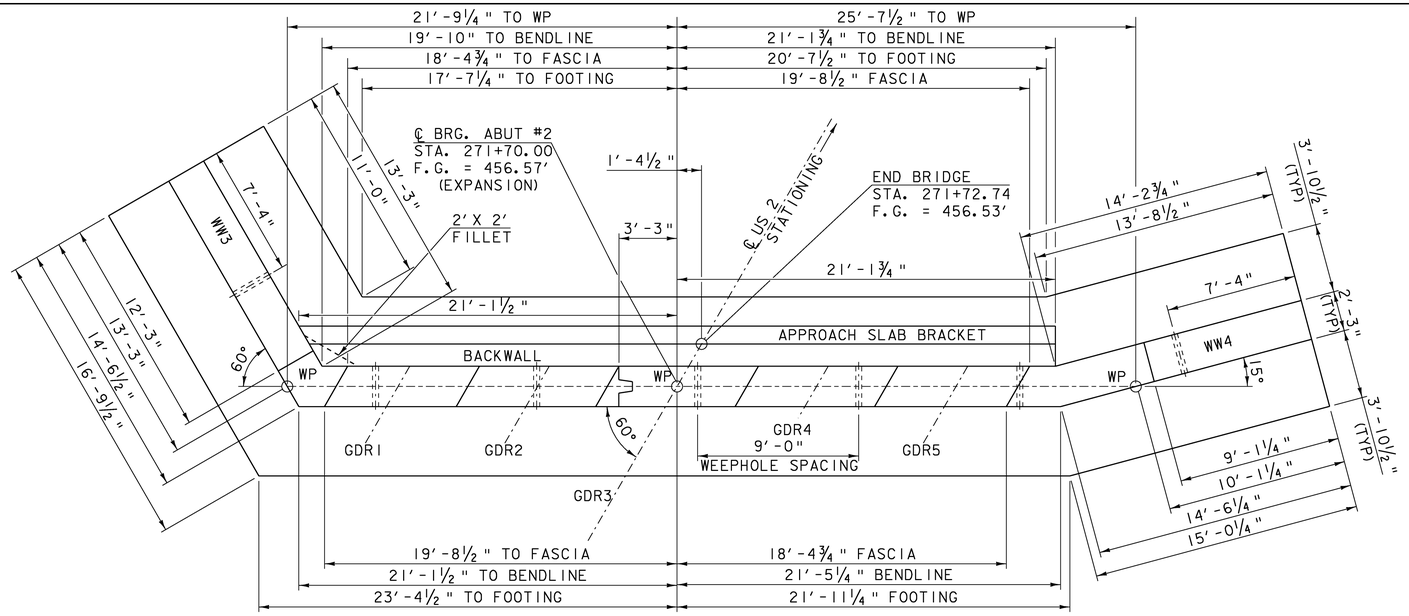

ABUTMENT NO. 2 PLAN

SCALE 1/4" = 1'-0

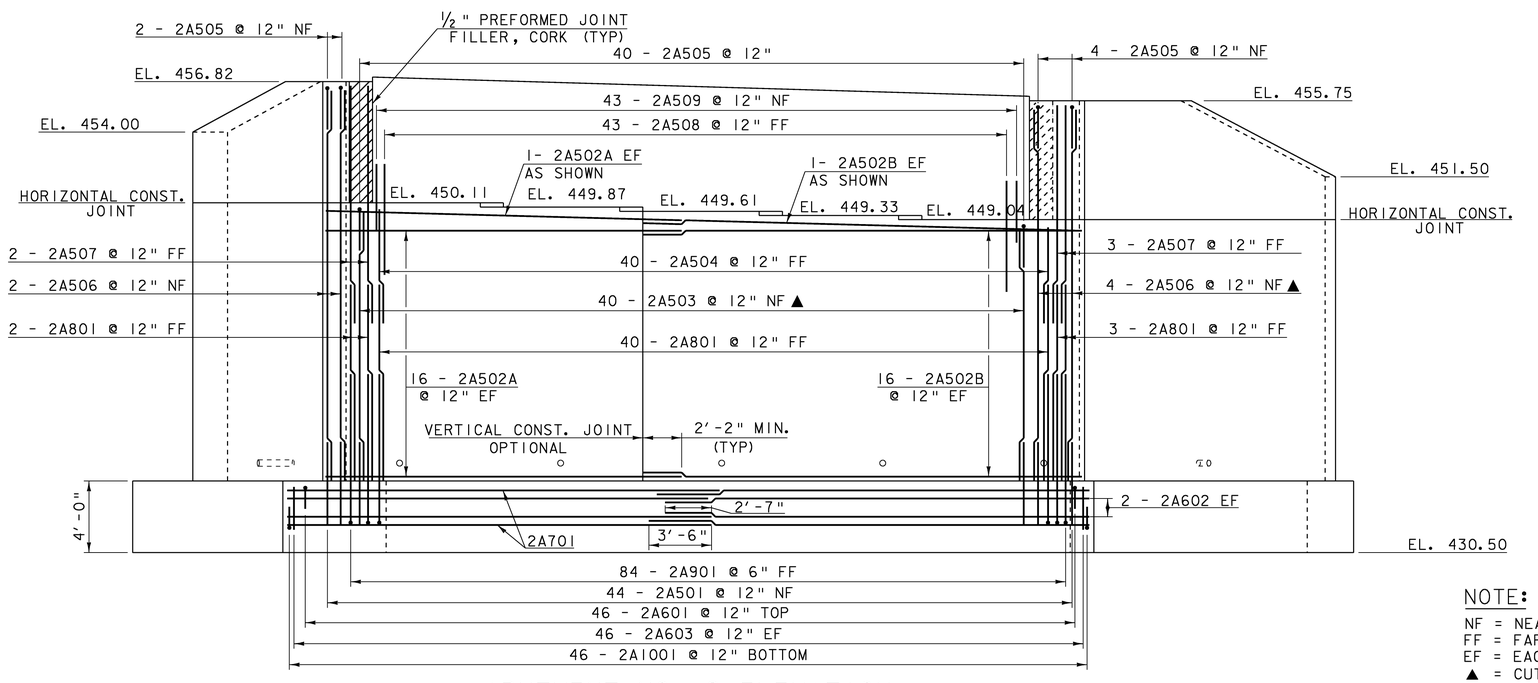

ABUTMENT NO. 2 ELEVATION

SCALE 1/4" = 1'-0

NOTE: PAYMENT FOR FURNISHING AND INSTALLING PREFORMED JOINT FILLER, CORK WILL BE MADE INCIDENTAL TO THE ADJACENT CONCRETE.

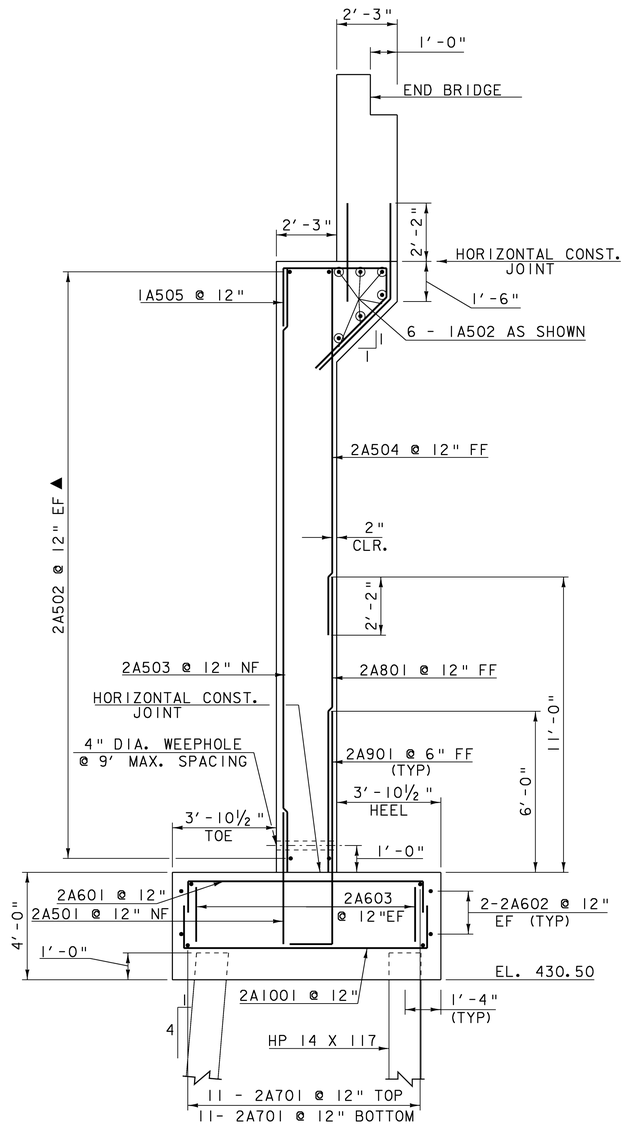

ABUTMENT NO. 2 TYPICAL

SCALE 3/8" = 1'-0

NOTE:

NF = NEAR FACE
FF = FAR FACE
EF = EACH FACE
▲ = CUT TO FIT IN FIELD
3" CLEAR, UNLESS OTHERWISE SPECIFIED ON THE PLANS.
2'-2" BAR LAP UNLESS OTHERWISE SPECIFIED ON THE PLANS.

ABUTMENT #2 DETAILS

PROJECT NAME: MORETOWN-MIDDLESEX
PROJECT NUMBER: BRS 0284(14)

FILE NAME: 78f219/struc./sf219sub
PROJECT LEADER: M. EVANS-MONGEON
DESIGNED BY: S. SCRIBNER
PLOT DATE: 15-JUN-2009
DRAWN BY: L. DUQUETTE
CHECKED BY: J. LACROIX
SHEET 65 OF 103

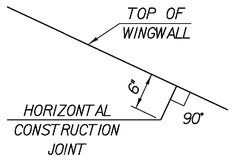

DETAIL A

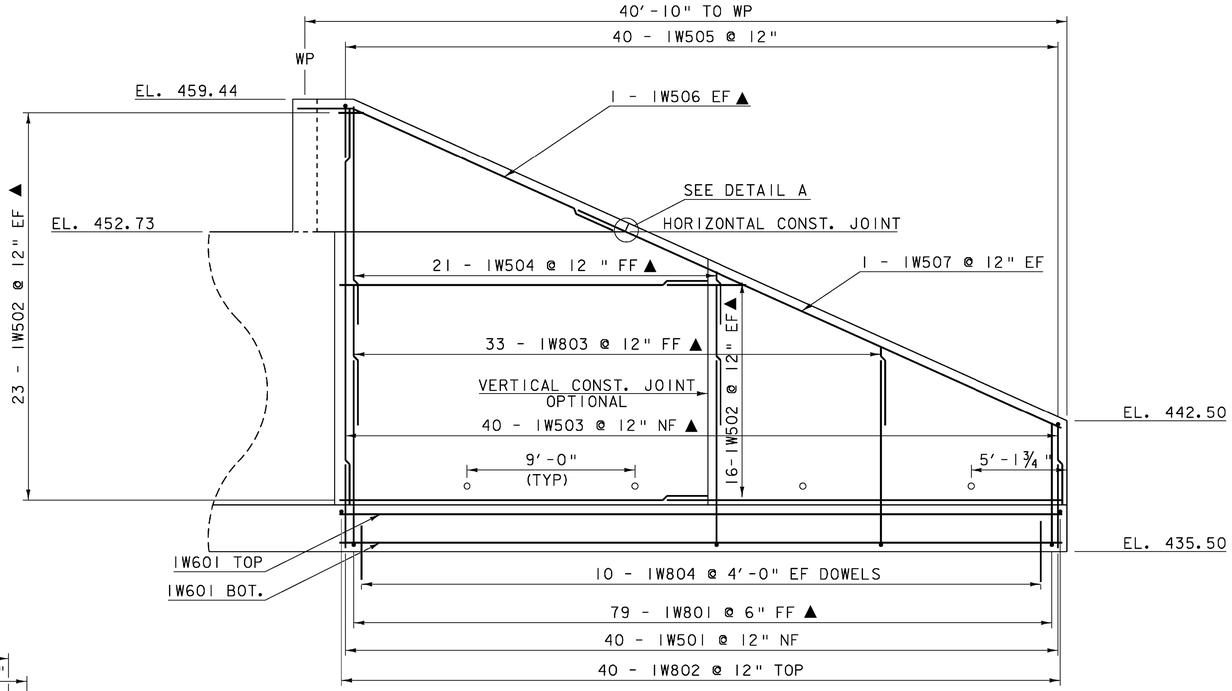

WINGWALL NO. 1 ELEVATION

SCALE 1/4" = 1'-0

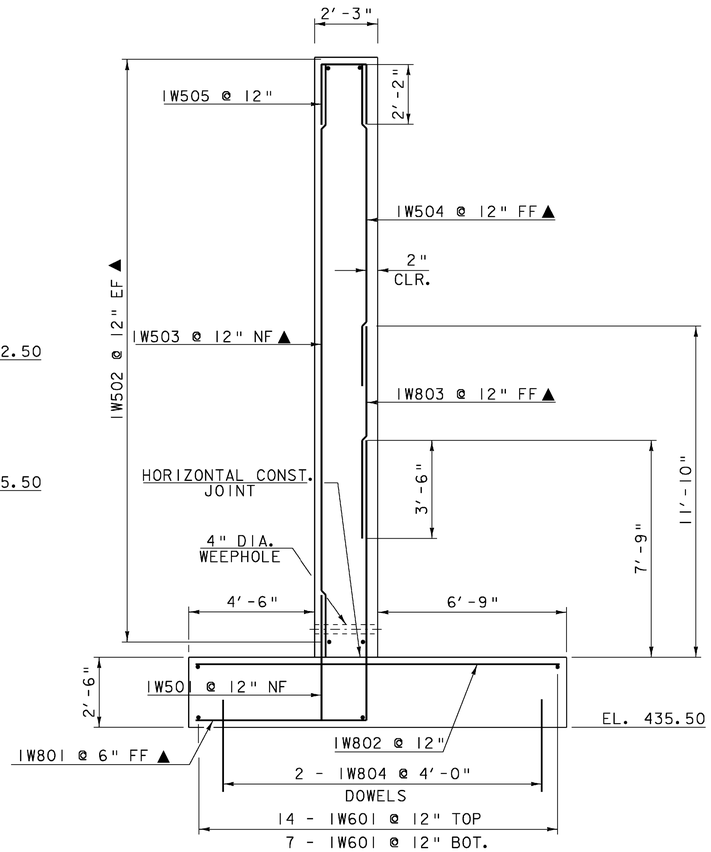

WINGWALL NO. 1 TYPICAL

SCALE 3/8" = 1'-0

WINGWALL NO. 2 TYPICAL ON "PILE LAYOUT SHEET".

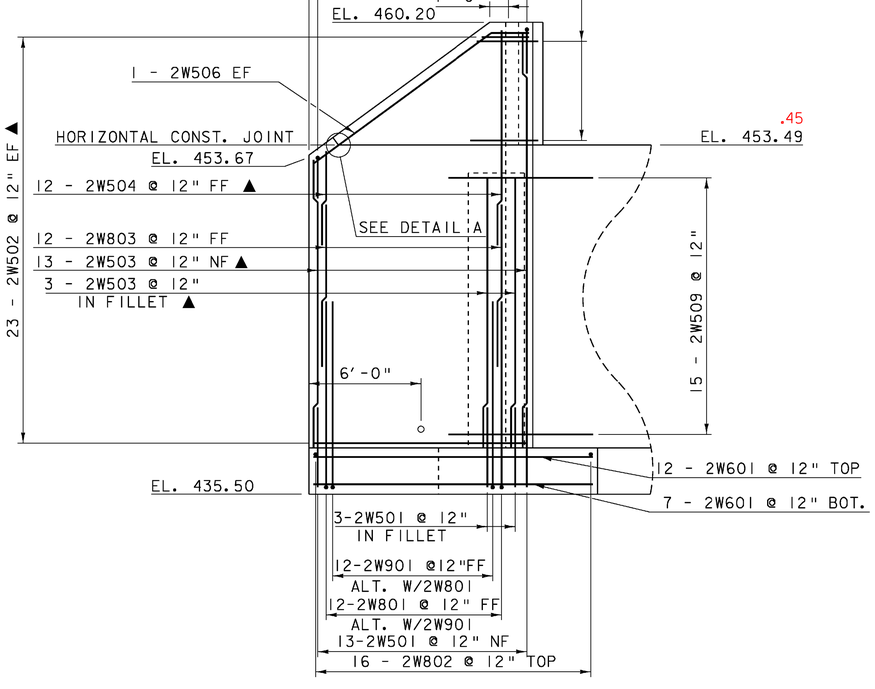

WINGWALL NO. 2 ELEVATION

SCALE 1/4" = 1'-0

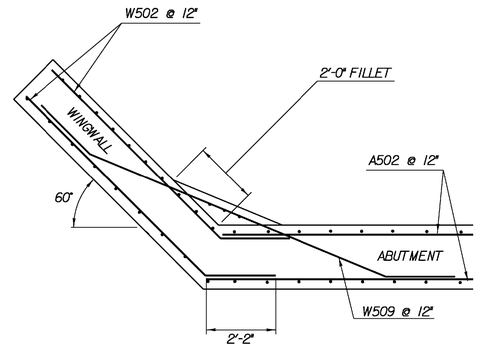

WINGWALL #2 & #3 FILLET DETAIL
(BELOW BRIDGE SEAT)
NTS

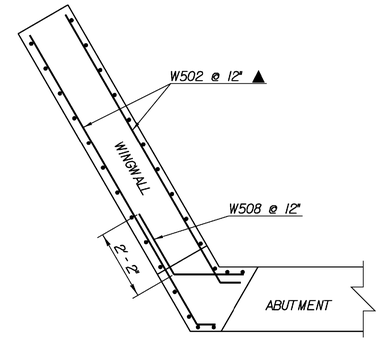

WINGWALL CORNER DETAIL
(ABOVE BRIDGE SEAT)
NTS

NOTE:

NF = NEAR FACE
FF = FAR FACE
EF = EACH FACE
▲ = CUT TO FIT IN FIELD
3" CLEAR, UNLESS OTHERWISE SPECIFIED ON THE PLANS.
2'-2" BAR LAP UNLESS OTHERWISE SPECIFIED ON THE PLANS.

WINGWALL #1 & #2 DETAILS

PROJECT NAME: MORETOWN-MIDDLESEX
PROJECT NUMBER: BRS 0284(14)

FILE NAME: 78f219/struc./sf219sub
PROJECT LEADER: M. EVANS-MONGEON
DESIGNED BY: J. TREI
PLOT DATE: 15-JUN-2009
DRAWN BY: L. DUQUETTE
CHECKED BY: S. SCRIBNER
SHEET 66 OF 103

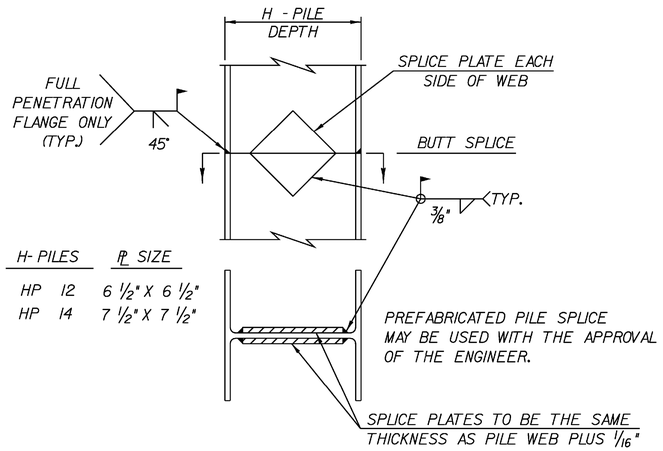

DETAIL OF PILE SPLICE

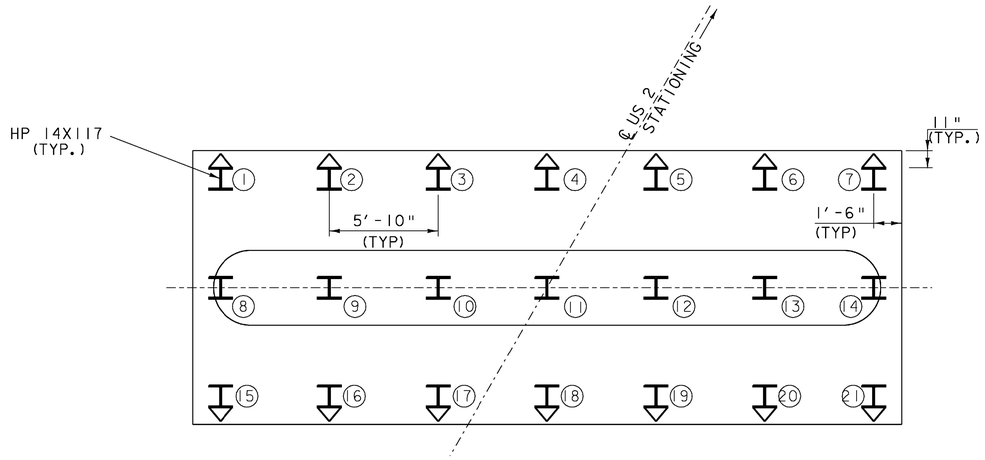

PIER PILE LAYOUT

SCALE 1/4" = 1'-0

= BATTERED PILE

= UNBATTERED PILE

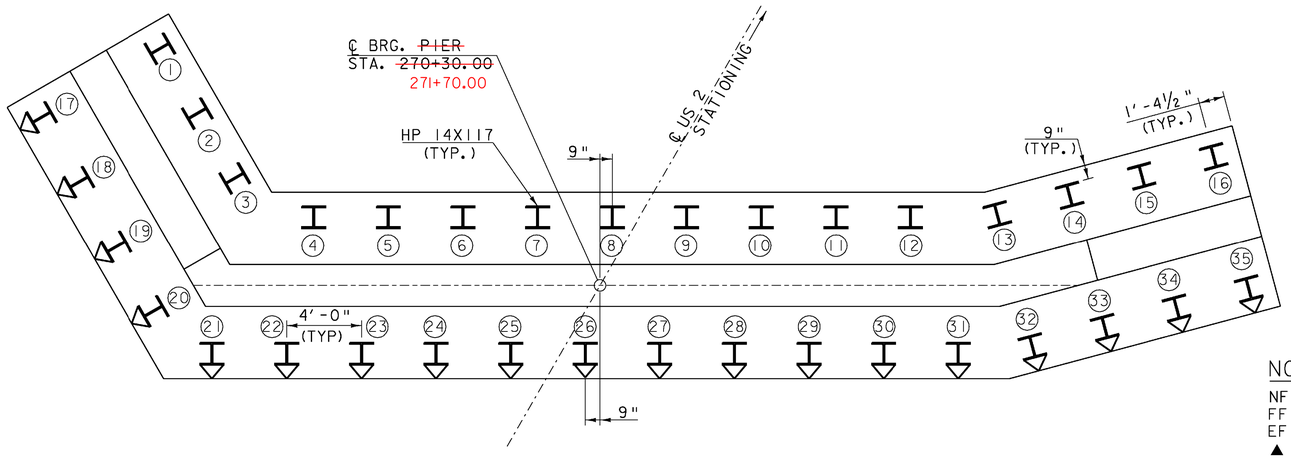

ABUTMENT NO. 2 PILE LAYOUT

SCALE 1/4" = 1'-0

NOTE:

NF = NEAR FACE
FF = FAR FACE
EF = EACH FACE
▲ = CUT TO FIT IN FIELD
3" CLEAR, UNLESS OTHERWISE SPECIFIED ON THE PLANS.
2'-2" BAR LAP UNLESS OTHERWISE SPECIFIED ON THE PLANS.

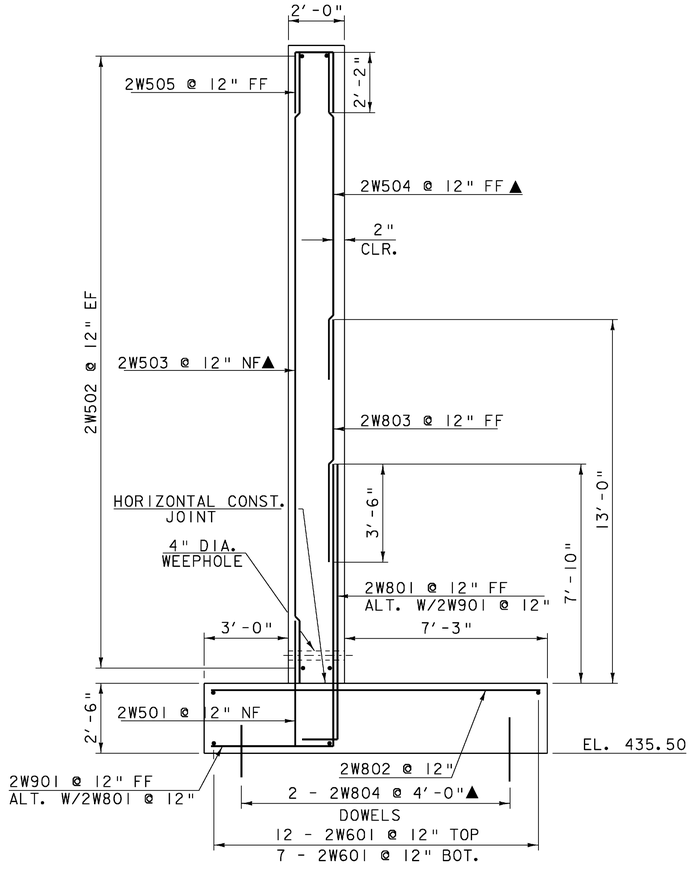

WINGWALL NO. 2 TYPICAL

SCALE 3/8" = 1'-0

PILE LAYOUT SHEET

PROJECT NAME: MORETOWN-MIDDLESEX
PROJECT NUMBER: BRS 0284(14)

FILE NAME: 78f219/struc./sf219sub
PROJECT LEADER: M. EVANS-MONGEON
DESIGNED BY: S. SCRIBNER

PLOT DATE: 15-JUN-2009
DRAWN BY: L. DUQUETTE
CHECKED BY: J. LACROIX
SHEET 67 OF 103

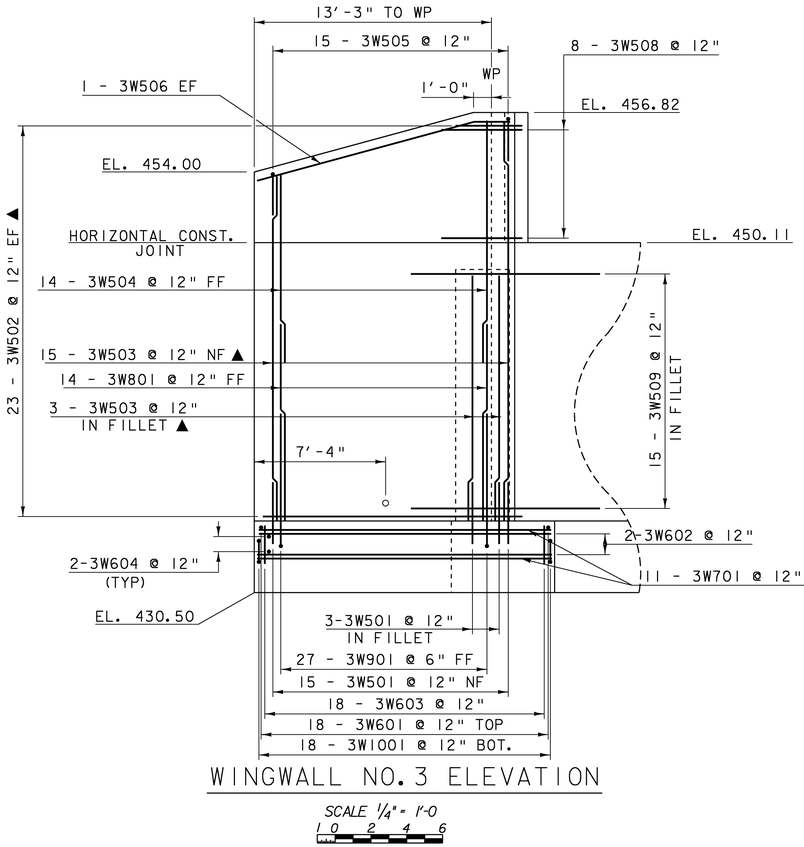

WINGWALL NO. 3 ELEVATION

SCALE 1/4" = 1'-0

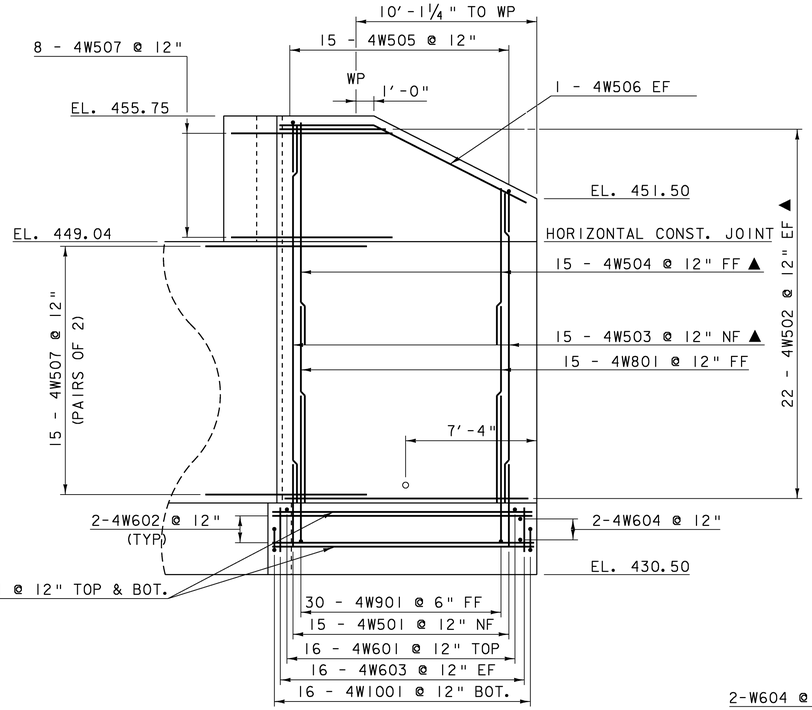

WINGWALL NO. 4 ELEVATION

SCALE 1/4" = 1'-0

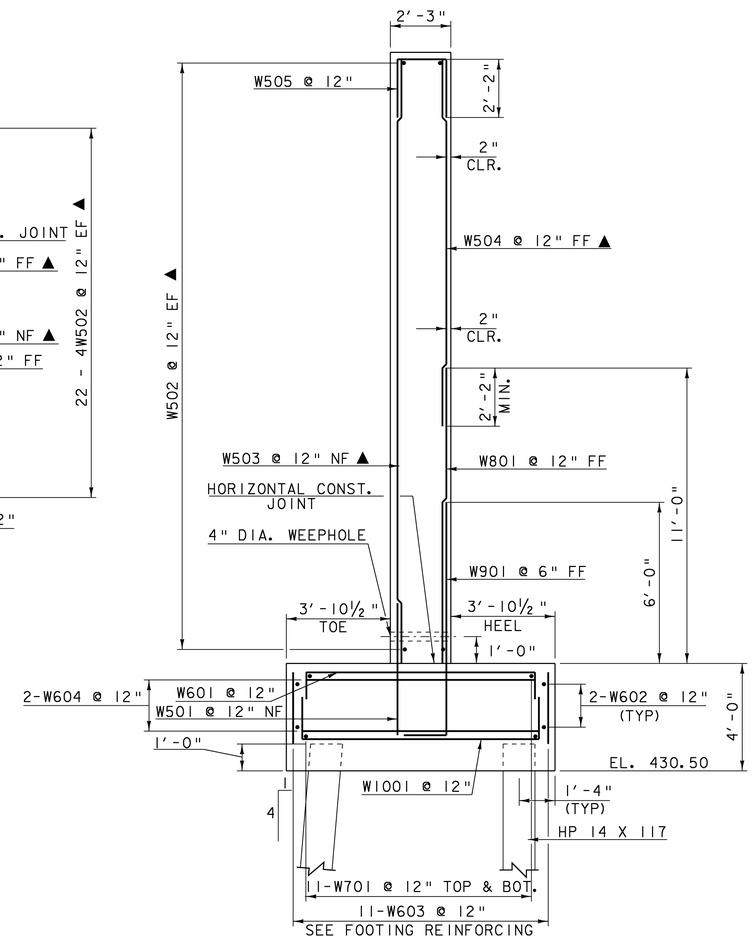

WINGWALL NO. 3 & 4 TYPICAL

SCALE 3/8" = 1'-0

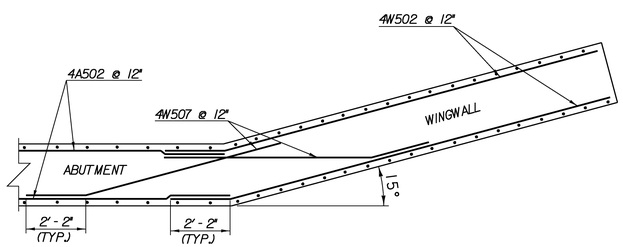

WINGWALL #4 CORNER DETAIL
(BELOW BRIDGE SEAT)
NTS

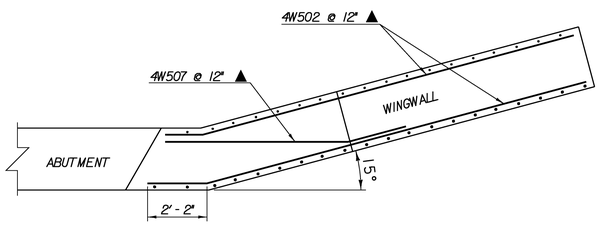

WINGWALL #4 CORNER DETAIL
(ABOVE BRIDGE SEAT)
NTS

NOTE:

NF = NEAR FACE
FF = FAR FACE
EF = EACH FACE
▲ = CUT TO FIT IN FIELD
3" CLEAR, UNLESS OTHERWISE SPECIFIED ON THE PLANS.
2′-2" BAR LAP UNLESS OTHERWISE SPECIFIED ON THE PLANS.

WINGWALL #3 & #4 DETAILS

PROJECT NAME: MORETOWN-MIDDLESEX
PROJECT NUMBER: BRS 0284(14)

FILE NAME: 78f219/struc./sf219sub
PROJECT LEADER: M. EVANS-MONGEON
DESIGNED BY: S. SCRIBNER
PLOT DATE: 15-JUN-2009
DRAWN BY: L. DUQUETTE
CHECKED BY: J. LACROIX
SHEET 68 OF 103

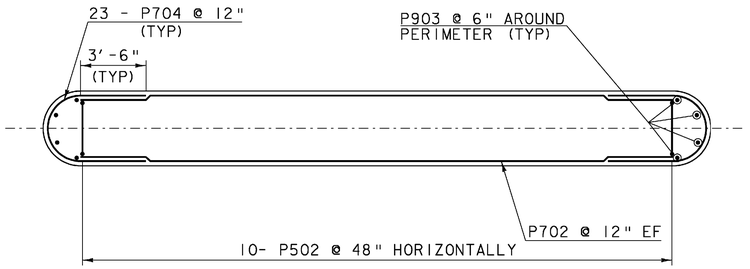

PIER STEM PLAN

SCALE 1/4" = 1'-0

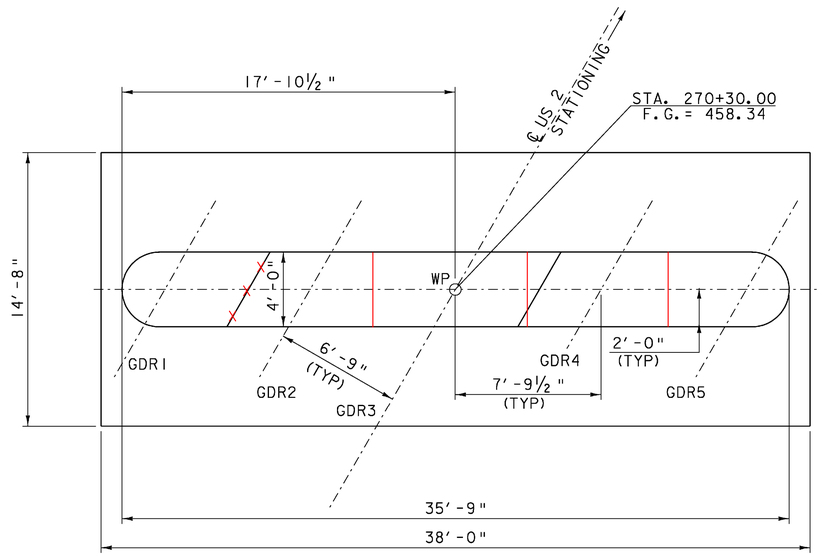

PIER PLAN

SCALE 1/4" = 1'-0

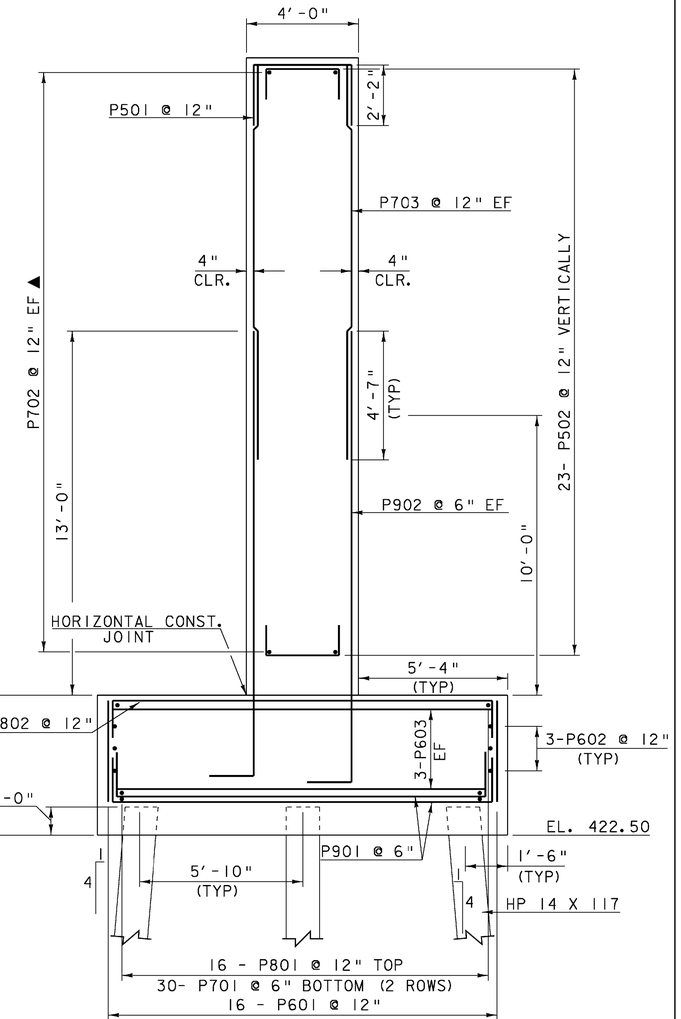

PIER TYPICAL

SCALE 3/8" = 1'-0

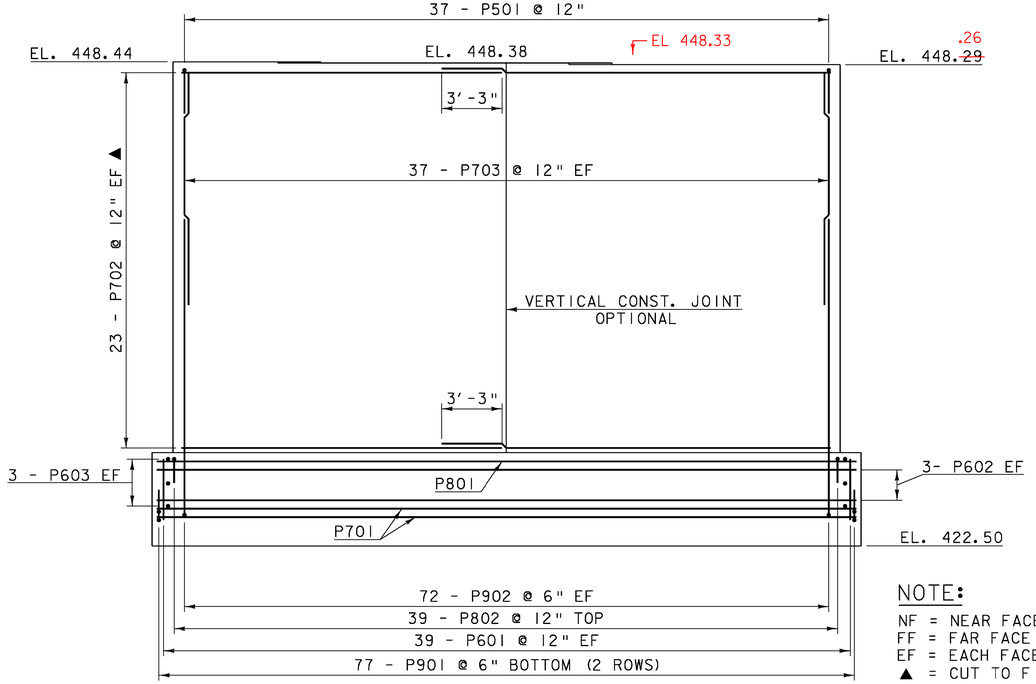

PIER ELEVATION

SCALE 1/4" = 1'-0

NOTE:

NF = NEAR FACE
FF = FAR FACE
EF = EACH FACE
▲ = CUT TO FIT IN FIELD
3" CLEAR, UNLESS OTHERWISE SPECIFIED ON THE PLANS.
2'-2" BAR LAP UNLESS OTHERWISE SPECIFIED ON THE PLANS.

PIER DETAILS

PROJECT NAME: MORETOWN-MIDDLESEX
PROJECT NUMBER: BRS 0284(14)

FILE NAME: 78f219/struc./sf219sub
PROJECT LEADER: M. EVANS-MONGEON
DESIGNED BY: S. SCRIBNER

PLOT DATE: 15-JUN-2009
DRAWN BY: L. DUQUETTE
CHECKED BY: J. LACROIX
SHEET 69 OF 103

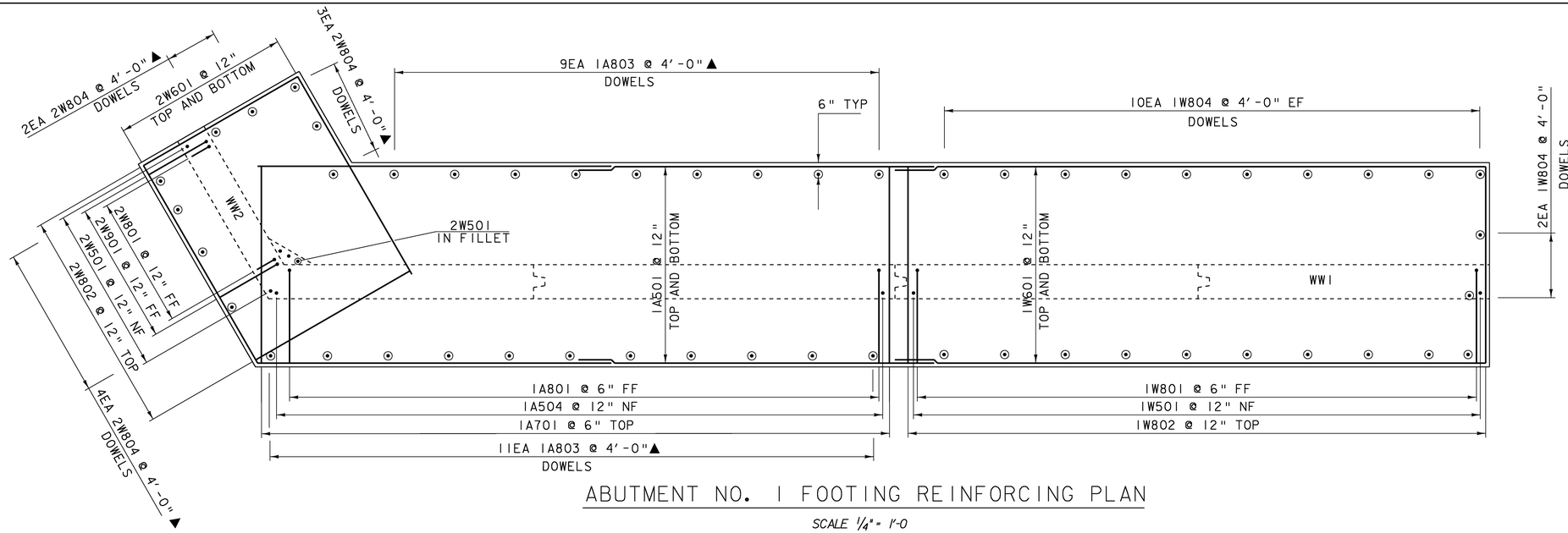

ABUTMENT NO. 1 FOOTING REINFORCING PLAN

SCALE 1/4" = 1'-0

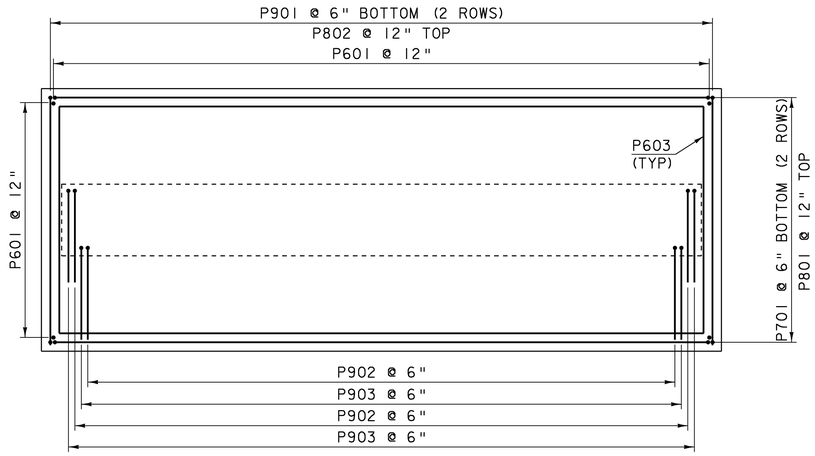

PIER FOOTING REINFORCING PLAN

SCALE 1/4" = 1'-0

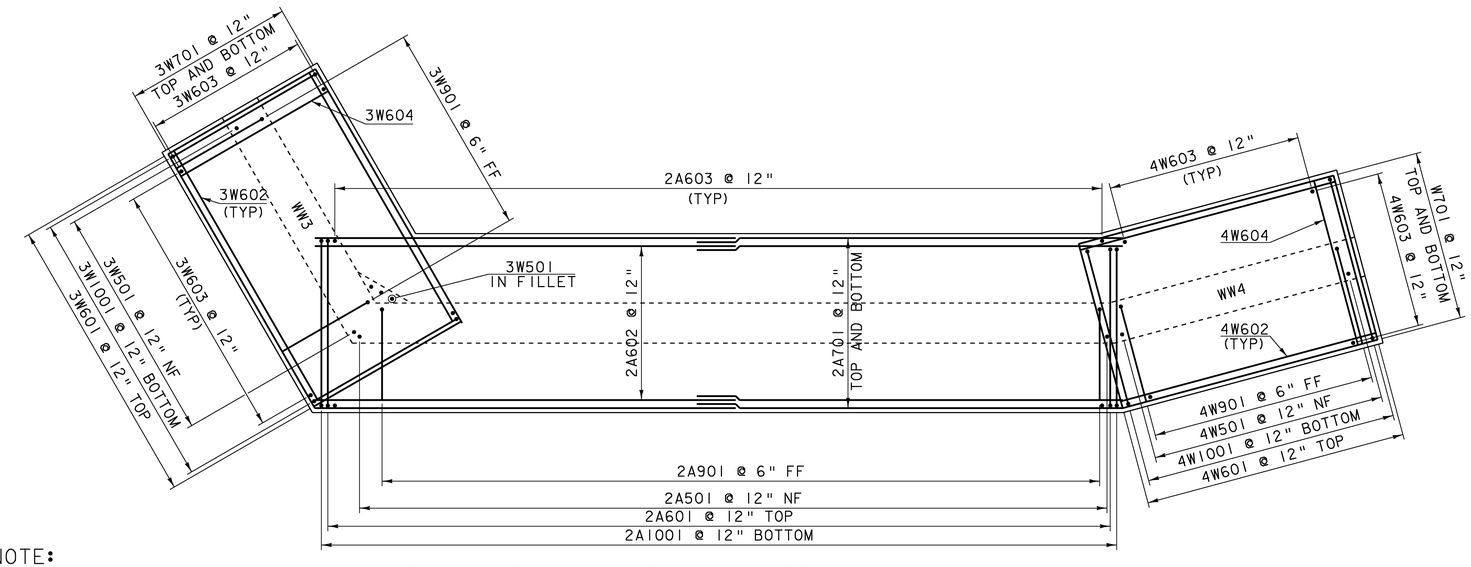

ABUTMENT NO. 2 FOOTING REINFORCING PLAN

SCALE 1/4" = 1'-0

NOTE:

NF = NEAR FACE
FF = FAR FACE
EF = EACH FACE
▲ = CUT TO FIT IN FIELD
3" CLEAR, UNLESS OTHERWISE SPECIFIED ON THE PLANS.
2'-2" BAR LAP UNLESS OTHERWISE SPECIFIED ON THE PLANS.

FOOTING REINFORCING PLAN

PROJECT NAME: MORETOWN-MIDDLESEX
PROJECT NUMBER: BRS 0284(14)

FILE NAME: 78f219/struc./sf219sub
PROJECT LEADER: M. EVANS-MONGEON
DESIGNED BY: S. SCRIBNER

PLOT DATE: 15-JUN-2009
DRAWN BY: L. DUQUETTE
CHECKED BY: J. LACROIX
SHEET 70 OF 103

STATE OF VERMONT
AGENCY OF TRANSPORTATION

REINFORCING STEEL SCHEDULE

ITEM	EACH	SIZE	LENGTH	MARK	TYPE	A	B	C	D	E	F	G	H	J	K	R	O
DECK & CURB																	
⊹	705	5	37'- 1"	1ES501	STR	37'- 1"											
⊹	565	5	5'- 2"	1ES502	STR	5'- 2"											
	56	5	8'- 0"	1ES503	S5	0'- 6"	1'- 8"	0'- 10"	5'- 0"								
	774	5	5'- 5"	1ES504	S5	0'- 10"	1'- 2"	1'- 5"	1'- 2"			0'- 10"					
⊹	571	6	32'- 6"	1ES601	STR	32'- 6"											
	50	6	40'- 0"	1ES602	STR	40'- 0"											
	24	6	7'- 2"	1ES603	STR	7'- 2"											
ABUTMENT # 1																	
	42	5	23'- 4"	1A501	STR	23'- 4"											
	54	5	19'- 5"	1A502A	STR	19'- 5"											
▲	54	5	26'- 5"	1A502B	STR	26'- 5"											
	45	5	11'- 5"	1A503	16	2'- 2"	4'- 1"	2'- 2"	3'- 0"				2'- 1"		2'- 1"		
⊹	46	5	4'- 5"	1A504	STR	4'- 5"											
	43	5	7'- 2"	1A508	19		3'- 7"	3'- 7"					2'- 6"		2'- 6"		
	43	5	3'- 8"	1A509	STR	3'- 8"											
	43	5	12'- 2"	1A510	S10		5'- 2"	1'- 10"	5'- 2"								
	43	5	6'- 5"	1A511	S10		3'- 8"	0'- 9"	2'- 0"								
▲	39	5	15'- 3"	1A512	STR	15'- 3"											
⊹	40	6	8'- 10"	1A602	STR	8'- 10"											
▲	6	6	21'- 11"	1A603	STR	21'- 11"											
	6	6	15'- 2"	1A604	STR	15'- 2"											
△	87	7	13'- 0"	1A701	STR	13'- 0"											
	84	8	17'- 7"	1A801	17		6'- 4"	11'- 3"									
	20	8	4'- 0"	1A802	17		1'- 6"	2'- 6"									
▲	20	8	5'- 10"	1A803	STR	5'- 10"											
WINGWALL # 1																	
⊹	41	5	4'- 5"	1W501	STR	4'- 5"											
▲	78	5	20'- 0"	1W502	STR	20'- 0"											
▲	40	5	21'- 2"	1W503	STR	21'- 2"											
▲	21	5	11'- 6"	1W504	STR	11'- 6"											
	40	5	6'- 2"	1W505	S10		2'- 2"	1'- 10"	2'- 2"								
▲	2	5	19'- 0"	1W506	19		3'- 0"	16'- 0"					1'- 3"		2'- 9"		
	2	5	28'- 5"	1W507	STR	28'- 5"											
	21	6	38'- 11"	1W601	STR	38'- 11"											
▲	79	8	16'- 4"	1W801	17		6'- 4"	10'- 0"									
	40	8	13'- 0"	1W802	STR	13'- 0"											
⊹ ▲	34	8	7'- 7"	1W803	STR	7'- 7"											
	22	8	3'- 6"	1W804	STR	3'- 6"											
WINGWALL # 2																	
	16	5	4'- 5"	2W501	STR	4'- 5"											
▲	46	5	13'- 8"	2W502	19		2'- 2"	11'- 6"					1'- 11"		1'- 1"		
▲	16	5	21'- 11"	2W503	STR	21'- 11"											
⊹ ▲	13	5	11'- 2"	2W504	STR	11'- 2"											
	16	5	5'- 11"	2W505	S10		2'- 2"	1'- 7"	2'- 2"								
	2	5	13'- 6"	2W506	19		2'- 1"	11'- 5"					1'- 2"		1'- 8"		
	8	5	4'- 11"	2W508	19		2'- 2"	2'- 9"					1'- 11"		1'- 1"		
	15	5	14'- 5"	2W509	22		2'- 2"	10'- 1"	2'- 2"				1'- 1"	1'- 1"	1'- 11"	1'- 11"	
⊹	20	6	14'- 11"	2W601	STR	14'- 11"											
	12	8	11'- 4"	2W801	17		1'- 3"	10'- 1"									
	16	8	11'- 9"	2W802	STR	11'- 9"											
⊹	13	8	8'- 8"	2W803	STR	8'- 8"											
▲	9	8	5'- 10"	2W804	STR	5'- 10"											
△	14	9	14'- 8"	2W901	17		4'- 7"	10'- 1"									
APPROACH SLAB # 1																	
⊹	22	5	37'- 7"	1EAS501	STR	37'- 7"											
	60	5	6'- 5"	1EAS502	S5	0'- 10"	1'- 8"	1'- 5"	1'- 8"			0'- 10"					
	10	5	20'-0"	ES501	STR												
⊹	41	9	20'- 9"	1EAS901	1	1'- 3"	19'- 6"							1'- 0"			
ABUTMENT # 2																	
⊹	45	5	5'- 2"	2A501	STR	5'- 2"											
	54	5	19'- 10"	2A502A	STR	19'- 10"											
▲	54	5	24'- 5"	2A502B	STR	24'- 5"											
▲	40	5	15'- 4"	2A503	STR	15'- 4"											
	40	5	6'- 6"	2A504	STR	6'- 6"											
	46	5	11'- 5"	2A505	16	2'- 2"	4'- 1"	2'- 2"	3'- 0"				2'- 1"		2'- 1"		
▲	6	5	22'- 1"	2A506	STR	22'- 1"											
	5	5	13'- 3"	2A507	STR	13'- 3"											
	43	5	7'- 2"	2A508	19		3'- 7"	3'- 7"					2'- 6"		2'- 6"		
	43	5	3'- 8"	2A509	STR	3'- 8"											
	43	5	12'- 2"	2A510	S10		5'- 2"	1'- 10"	5'- 2"								
	43	5	6'- 5"	2A511	S10		3'- 8"	0'- 9"	2'- 0"								

ITEM	EACH	SIZE	LENGTH	MARK	TYPE	A	B	C	D	E	F	G	H	J	K	R	O
	46	6	11'- 10"	2A601	17		1'- 2"	9'- 6"	1'- 2"								
	8	6	23'- 8"	2A602	STR	23'- 8"											
⊹	93	6	2'- 9"	2A603	STR	2'- 9"											
	44	7	24'- 2"	2A701	STR	24'- 2"											
	45	8	11'- 0"	2A801	STR	11'- 0"											
⊹	21	8	4'- 0"	2A802	17		1'- 6"	2'- 6"									
⊹	85	9	10'- 7"	2A901	17		1'- 7"	9'- 0"									
⊹	47	10	13'- 2"	2A1001	17		1'- 10"	9'- 6"	1'- 10"								
WINGWALL # 3																	
	18	5	5'- 2"	3W501	STR	5'- 2"											
▲	46	5	16'- 2"	3W502	19		2'- 2"	14'- 0"					1'- 0"		0'- 7"		
▲	18	5	22'- 1"	3W503	STR	22'- 1"											
⊹	15	5	13'- 3"	3W504	STR	13'- 3"											
	15	5	6'- 2"	3W505	S10		2'- 2"	1'- 10"	2'- 2"								
	2	5	14'- 7"	3W506	19		2'- 0"	12'- 7"					0'- 6"		2'- 0"		
	8	5	5'- 4"	3W508	19		2'- 2"	3'- 2"					1'- 10"		1'- 1"		
	15	5	14'- 11"	3W509	22		2'- 2"	10'- 7"	2'- 2"				1'- 1"		1'- 1"		
	18	6	11'- 6"	3W601	S10		1'- 0"	9'- 6"	1'- 0"								
	4	6	16'- 3"	3W602	STR	16'- 3"											
	47	6	2'- 9"	3W603	STR	2'- 9"											
⊹	3	6	9'- 6"	3W604	STR	9'- 6"											
⊹	23	7	16'- 3"	3W701	STR	16'- 3"											
⊹	15	8	11'- 0"	3W801	STR	11'- 0"											
	27	9	10'- 7"	3W901	17		1'- 7"	9'- 0"									
⊹	19	10	13'- 2"	3W1001	17		1'- 10"	9'- 6"	1'- 10"								
WINGWALL # 4																	
⊹	16	5	5'- 2"	4W501	STR	5'- 2"											
▲	44	5	16'- 2"	4W502	19		2'- 2"	14'- 0"					1'- 0"		0'- 7"		
▲	15	5	21'- 0"	4W503	STR	21'- 0"											
▲	15	5	12'- 2"	4W504	STR	12'- 2"											
	15	5	6'- 2"	4W505	S10		2'- 2"	1'- 10"	2'- 2"								
	2	5	15'- 2"	4W506	19		5'- 2"	10'- 0"					2'- 2"		4'- 8"		
	38	5	10'- 3"	4W507	19		2'- 2"	8'- 1"					0'- 7"		2'- 1"		
	16	6	11'- 6"	4W601	S10		1'- 0"	9'- 6"	1'- 0"								
	4	6	14'- 6"	4W602	STR	14'- 6"											
⊹	44	6	2'- 9"	4W603	STR	2'- 9"											
	2	6	9'- 6"	4W604	STR	9'- 6"											
⊹	23	7	14'- 6"	4W701	STR	14'- 6"											
⊹	16	8	11'- 0"	4W801	STR	11'- 0"											
⊹	31	9	10'- 7"	4W901	17		1'- 7"	9'- 0"									
	16	10	13'- 2"	4W1001	17		1'- 10"	9'- 6"	1'- 10"								
APPROACH SLAB # 2																	
⊹	22	5	37'- 7"	2EAS501	STR	37'- 7"											
	60	5	6'- 5"	2EAS502	S5	0'- 10"	1'- 8"	1'- 5"	1'- 8"			0'- 10"					
	10	5		ES501	STR	20'-0"											
⊹	41	9	20'- 9"	2EAS901	1	1'- 3"	19'- 6"							1'- 0"			
PIER																	
△	39	5	7'- 8"	P501	S10		2'- 2"	3'- 4"	2'- 2"								
△	232	5	5'- 4"	P502	S10		1'- 0"	3'- 4"	1'- 0"								
	110	6	3'- 8"	P601	STR	3'- 8"											
⊹	7	6	37'- 4"	P602	STR	37'- 4"											
⊹	7	6	14'- 0"	P603	STR	14'- 0"											
	60	7	37'- 4"	P701	STR	37'- 4"											
⊹ ▲	93	7	20'- 10"	P702	STR	20'- 10"											
⊹	75	7	12'- 8"	P703	STR	12'- 8"											
	46	7	13'- 8"	P704	S11	5'- 2"	3'- 4"	5'- 2"							5'- 2"		3'- 4"
⊹	17	8	37'- 4"	P801	STR	37'- 4"											
⊹	40	8	16'- 8"	P802	17		1'- 4"	14'- 0"	1'- 4"								
⊹	155	9	17'- 2"	P901	17		1'- 7"	14'- 0"	1'- 7"								
⊹	145	9	18'- 7"	P902	17		1'- 7"	17'- 0"									
	22	9	18'-7"	P903			1'-7"	17'-0"									

~ NOTES ~

1. UNLESS OTHERWISE DESIGNATED, ALL BAR REINFORCEMENT FOR CONCRETE IN SIZES UP TO AND INCLUDING NO. 18 SHALL CONFORM TO THE REQUIREMENTS OF THE "SPECIFICATIONS FOR DEFORMED BILLET-STEEL BARS FOR CONCRETE REINFORCEMENT", AASHTO M31 (ASTM A 615-SI). ALL BARS SHALL BE GRADE 60, UNLESS OTHERWISE DESIGNATED.
2. FOR TYPICAL BENDING DETAILS, RECOMMENDED PIN DIAMETER "D" OF BENDS AND HOOKS, AND OTHER STANDARD PRACTICE, SEE CURRENT CONCRETE REINFORCING STEEL INSTITUTE "MANUAL OF STANDARD PRACTICE".
3. BARS WHICH REQUIRE MORE ACCURATE BENDING THAN STANDARD PRACTICES SHOULD HAVE LIMITS INDICATED.
4. ALL DIMENSIONS ARE OUT TO OUT OF BAR EXCEPT "A" AND "G" ON STANDARD 180 DEGREE AND 135 DEGREE HOOKS.
5. "J" DIMENSION ON 180 DEGREE HOOKS TO BE SHOWN ONLY WHERE NECESSARY TO RESTRICT HOOK SIZE. OTHERWISE, STANDARD HOOKS ARE TO BE USED.
6. "H" DIMENSION ON STIRRUPS TO BE SHOWN ONLY WHEN NECESSARY TO MAINTAIN CLEARANCES.
7. WHERE SLOPE DIFFERS FROM 45 DEGREES, DIMENSIONS "H" AND "K" MUST BE SHOWN.
8. ▲ DENOTES BARS TO BE CUT IN FIELD.
9. ⊹ DENOTES ONE EXTRA BAR ADDED FOR TESTING PURPOSES.
10. △ DENOTES TWO EXTRA BARS ADDED FOR TESTING PURPOSES.
11. E IN BAR MARK PREFIX DENOTES EPOXY COATED REINFORCING STEEL.

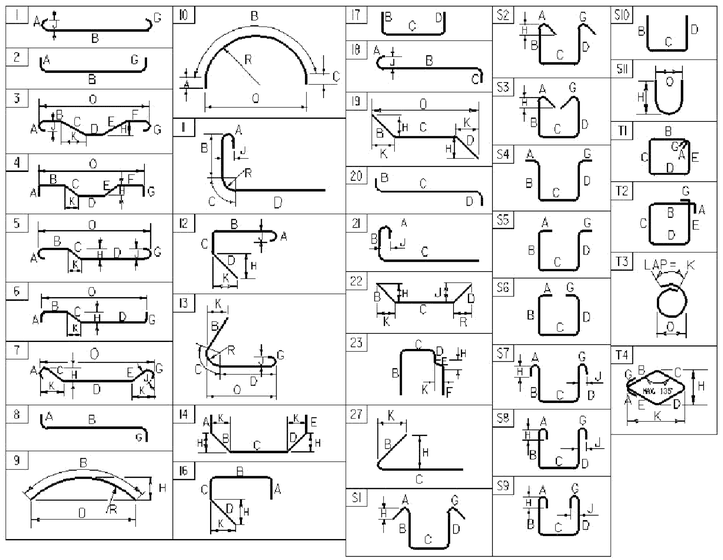

ASTM STANDARD REINFORCING BARS

BAR SIZE DESIGNATION	WEIGHT POUNDS PER FOOT	NOMINAL DIMENSIONS ROUND SECTION DIAMETER INCHES	AREA INCHES²	PERIMETER INCHES
#3	0.376	0.375	0.11	1.178
#4	0.668	0.500	0.20	1.571
#5	1.043	0.625	0.31	1.963
#6	1.502	0.750	0.44	2.356
#7	2.044	0.875	0.60	2.749
#8	2.670	1.000	0.79	3.142
#9	3.400	1.128	1.00	3.544
#10	4.303	1.270	1.27	3.990
#11	5.313	1.410	1.56	4.430
#14	7.65	1.693	2.25	5.32
#18	13.60	2.257	4.00	7.09

PROJECT NAME: MORETOWN-MIDDLESEX
PROJECT NUMBER: BRS 0284(14)

FILE NAME: 78f219
PROJECT MANAGER: M.EVANS-MONGEON
DESIGNED BY: S.SCRIBNER
REINFORCING STEEL SCHEDULE SHEET #1

PLOT DATE: 5/8/2009
DRAWN BY: L.DUQUETTE
CHECKED BY: S. SCRIBNER
SHEET 71 OF 103

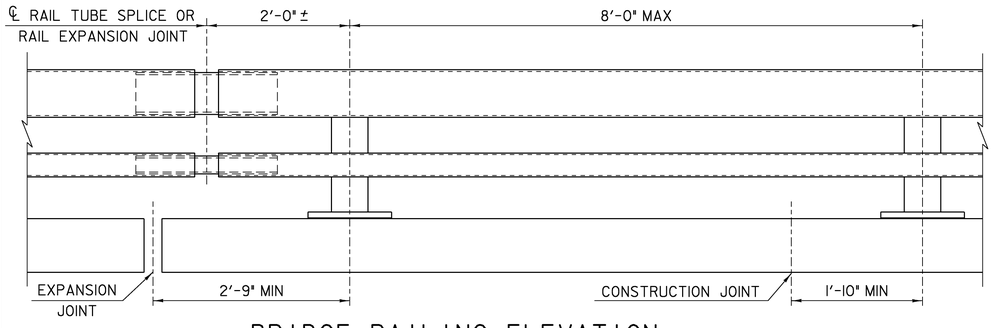

BRIDGE RAILING ELEVATION

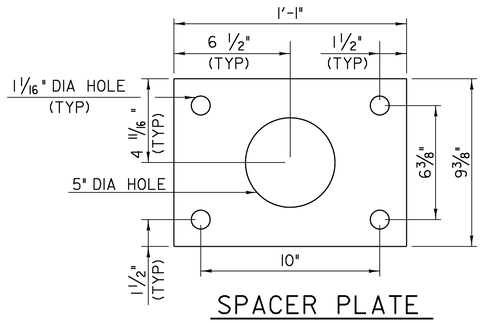

SPACER PLATE

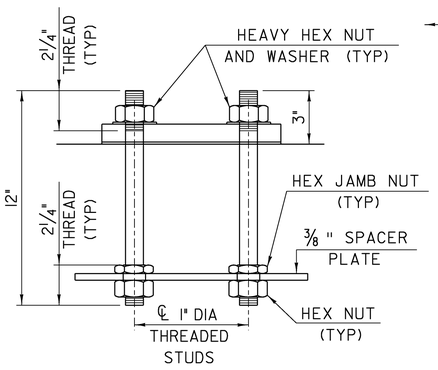

RAIL POST ANCHORAGE

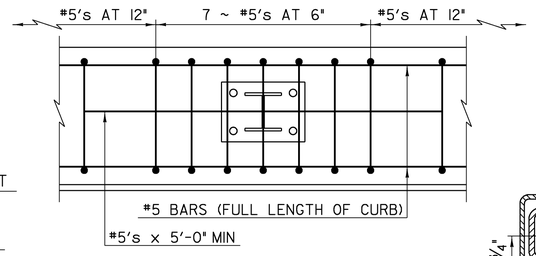

CURB REINFORCING PLAN

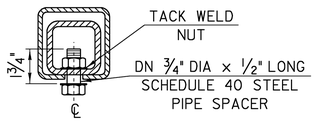

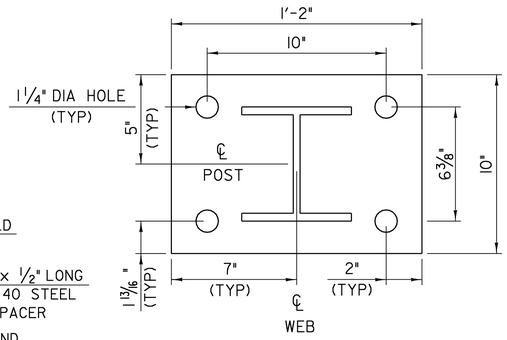

POST AND BASE PLATE

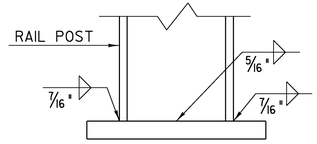

BASE WELD DETAIL

5/8" DIA TAPPED HOLE IN SPLICE TUBE AND 1 1/8" x 'C' SLOT IN RAIL TUBE FOR 5/8" DIA BOLT AND PLAIN HARDENED WASHER

EXPANSION JOINT SECTION

FOR DETAILS NOT SHOWN, SEE "RAIL TUBE SPLICE SECTION."

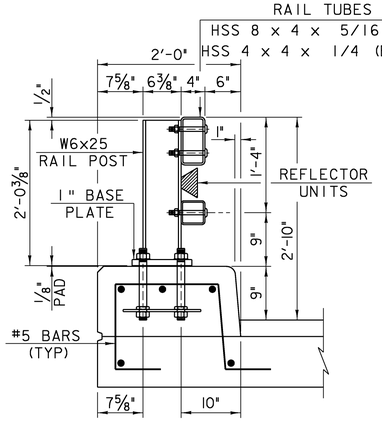

TYPICAL SECTION

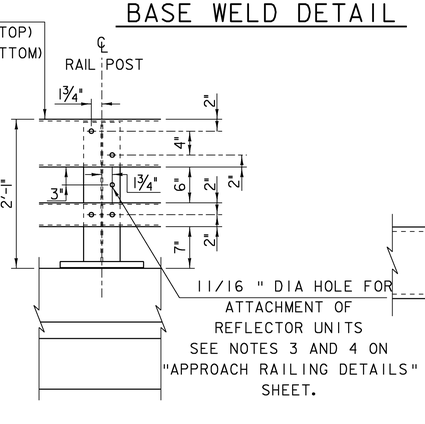

ELEVATION

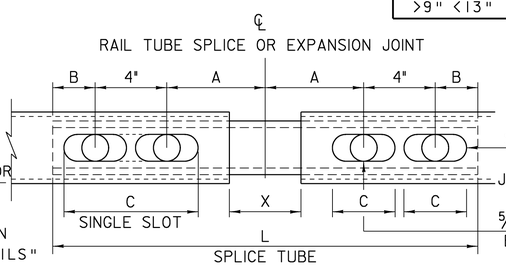

RAIL TUBE SPLICE AND RAIL EXPANSION JOINT DETAIL

(BOTTOM VIEW)

SPLICE TABLE					
T	A	B	C	L	X
N/A	4"	2"	--	20"	3/4"
EXPANSION JOINT TABLE					
<4"	4"	2"	2 1/2"	20"	2 1/2"
>4" <6 1/2"	5 1/2"	2 3/8"	3 1/2"	23 3/4"	4"
>6 1/2" <9"	6 1/2"	3 3/8"	9"*	27 3/4"	5"
>9" <13"	8 1/2"	4 3/8"	11"*	33 3/4"	7"

T = TOTAL MOVEMENT BETWEEN BRIDGE EXPANSION JOINTS. SEE NOTE 5.
* = SINGLE SLOT

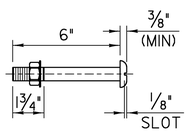

3/4" DIA M164 (TYPE 1) ROUND HEAD BOLT

(WITH WASHER AND PREVAILING TORQUE TYPE LOCK NUT)
(SEE NOTE #9)
ONLY FULL DIAMETER BODY BOLTS WILL BE ALLOWED.

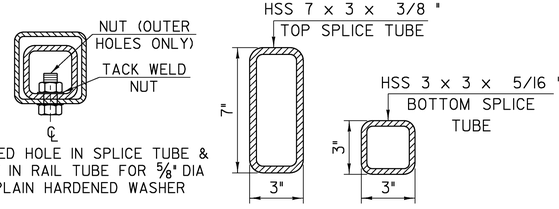

5/8" DIA TAPPED HOLE IN SPLICE TUBE & 3/4" DIA HOLE IN RAIL TUBE FOR 5/8" DIA BOLT & PLAIN HARDENED WASHER

RAIL TUBE SPLICE SECTION

NOTES

1. ALL WORK AND MATERIALS SHALL CONFORM TO THE PROVISIONS OF SECTION 525.
2. ALL EXPOSED CUT OR SHEARED EDGES SHALL BE ROUNDED TO A 1/16 " RADIUS AND FREE OF BURRS.
3. RAIL POSTS SHALL BE SET NORMAL TO GRADE.
4. SECTIONS OF RAIL TUBE SHALL BE ATTACHED TO A MINIMUM OF TWO (2) RAIL POSTS AND PREFERABLY TO AT LEAST FOUR (4) POSTS.
5. RAIL TUBE EXPANSION JOINTS SHALL BE PROVIDED IN ANY RAIL BAY SPANNING A SUPERSTRUCTURE EXPANSION JOINT. EXPANSION JOINT WIDTH SHALL BE "X" AT 45°F AND WILL BE ADJUSTED IN THE FIELD BY THE ENGINEER FOR OTHER TEMPERATURES.
6. ALL PARTS SHALL BE GALVANIZED AFTER FABRICATION IN ACCORDANCE WITH AASHTO M 111M/M 111, EXCEPT THAT HARDWARE SHALL MEET THE REQUIREMENTS OF AASHTO M 232M/M 232.
7. RAIL POSTS ANCHORING NUTS SHALL BE TIGHTENED TO A SNUG FIT AND GIVEN AN ADDITIONAL ONE-EIGHTH TURN.
8. RAIL TUBES SHALL BE ATTACHED USING 3/4 " FULL DIAMETER BODY AASHTO M164 (TYPE 1) ROUND HEAD BOLTS INSERTED THROUGH THE FACE OF THE TUBE. HOLES IN POSTS SHALL BE 1/16 " LARGER THAN THE BOLT SIZE.
9. HOLES IN RAILS FOR RAIL TUBE ATTACHMENT MAY BE FIELD-DRILLED. HOLES SHALL BE COATED WITH AN APPROVED ZINC-RICH PAINT PRIOR TO ERECTION.
10. ANY BENDING OF RAIL SHALL BE BY SHOP PROCEDURE ONLY.
11. THE FABRICATOR SHALL SUBMIT FABRICATION DRAWINGS INCLUDING WELDING PROCEDURES TO THE STRUCTURES SECTION FOR APPROVAL IN ACCORDANCE WITH THE PROVISIONS OF SUBSECTION 525.03. ALL WELDING SHALL CONFORM WITH SUBSECTION 506.10.
12. RAIL POSTS AND BASE PLATES SHALL BE TESTED FOR IMPACT PROPERTIES IN ACCORDANCE WITH ASTM A-370 CHARPY IMPACT TESTING USING TYPE A SPECIMEN.

MATERIALS

RAIL TUBES.....ASTM A500, GRADE B OR ASTM A501
RAIL POSTS AND BASE PLATES.....ASTM A709A709M, GRADE 50
ALL OTHER SHAPES AND PLATES.....ASTM A709/A709M, GRADE 36
ANCHOR STUDS.....ASTM A449
ALL OTHER BOLTS (UNLESS NOTED).....AASHTO M164, TYPE 1

NUTS FOR AASHTO M164 (ASTM A325) BOLTS AND FOR ANCHOR STUDS SHALL COMPLY WITH AASHTO M291 (ASTM A563).

WASHERS SHALL COMPLY WITH AASHTO M293 (ASTM F436) SPECIFICATIONS.

1/8 " PAD SHALL COMPLY WITH STANDARD SPECIFICATION SUBSECTION 731.01 OR 731.02.

BRIDGE RAILING DETAILS

PROJECT NAME:	MORETOWN-MIDDLESEX
PROJECT NUMBER:	BRS 0284(14)

FILE NAME: /78f219/str2/sf219frm.dgn	PLOT DATE: 15-JUN-2009
PROJECT LEADER: EVANS-MONGEON	DRAWN BY: G. ROKES
DESIGNED BY: S. SCRIBNER	CHECKED BY: S. SCRIBNER
IPARM: s78f219typ.1	SHEET 72 OF 103

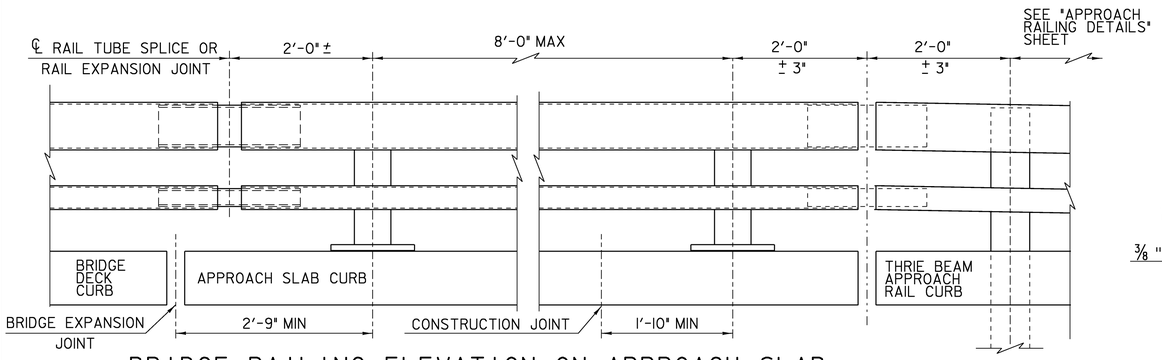

BRIDGE RAILING ELEVATION ON APPROACH SLAB

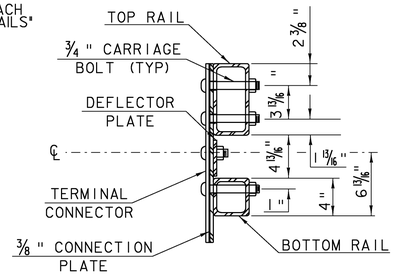

SECTION C-C (CONNECTION PLATE)

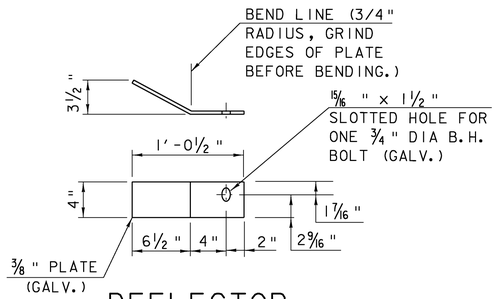

DEFLECTOR PLATE DETAIL

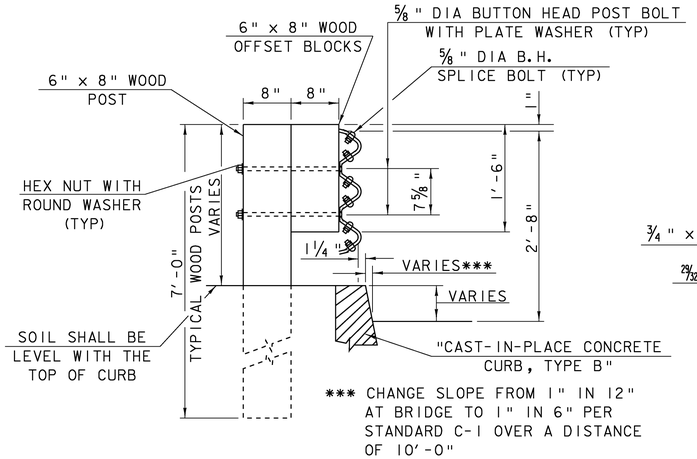

WOOD POST-RAIL ASSEMBLY

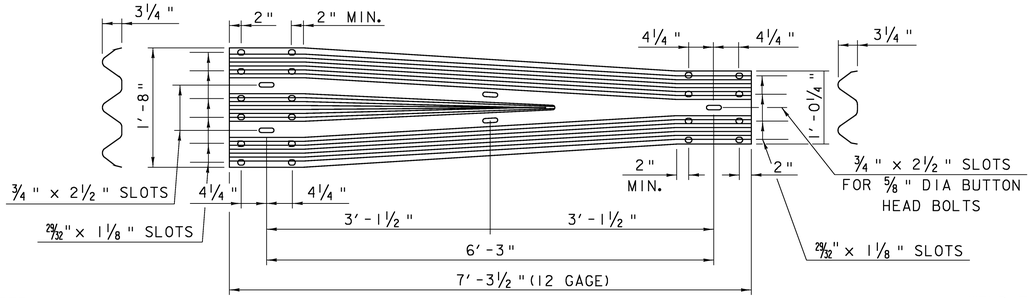

THRIE-BEAM TO STD SB TRANSITION SECTION (HM-TF-13/RE-69)

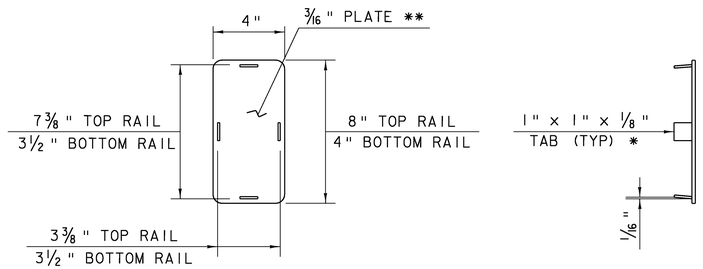

END CAP DETAIL

* WELD TABS TO END CAP PLATE IN TAPERED POSITION SO CAP CAN BE JAMMED INTO END OF RAIL TUBE.
** ROUND CORNERS ½ " RADIUS (TYP)

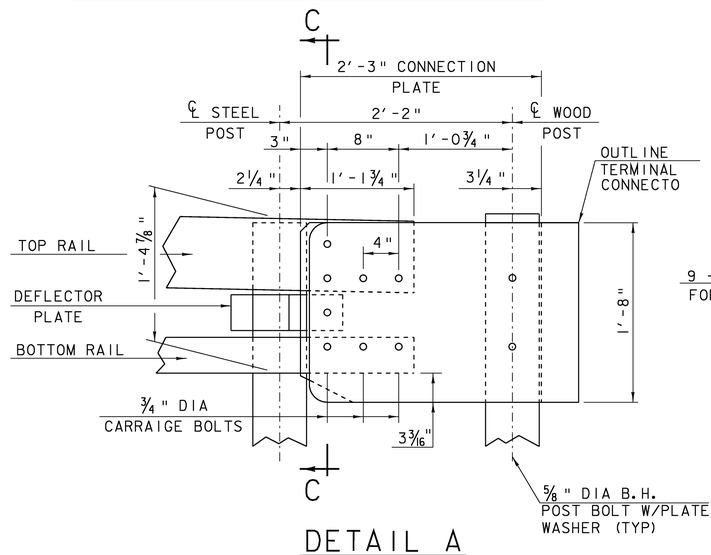

DETAIL A

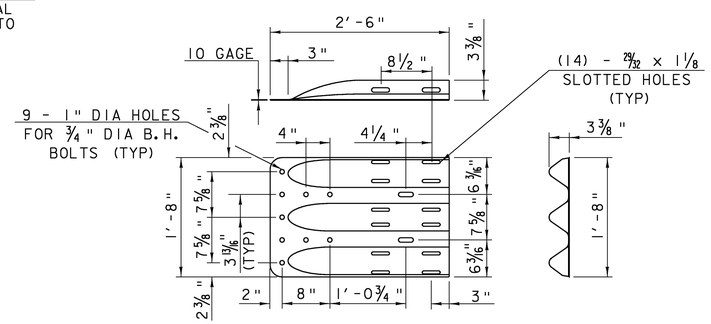

THRIE-BEAM TERMINAL CONNECTOR (HM-TF-13/RE-67)

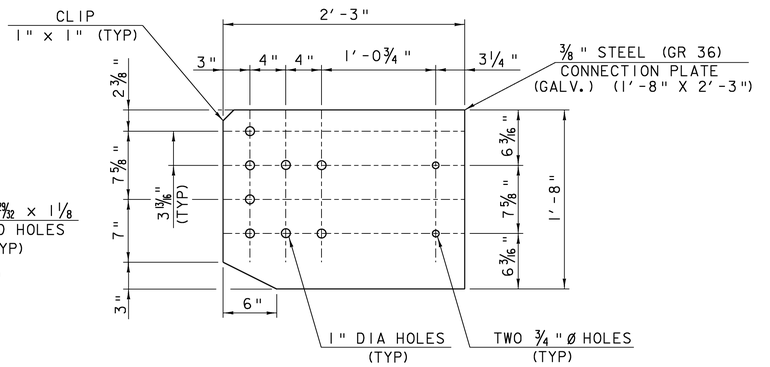

CONNECTION PLATE

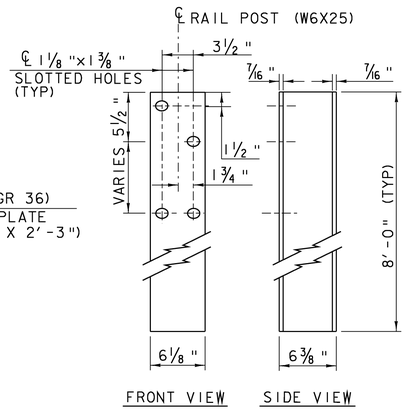

RAIL POST

APPROACH SLAB RAILING DETAILS

PROJECT NAME:	MORETOWN-MIDDLESEX
PROJECT NUMBER:	BRS 0284(14)

FILE NAME: /78f219/str2/sf219frm.dgn	PLOT DATE: 15-JUN-2009
PROJECT LEADER: EVANS-MONGEON	DRAWN BY: G. ROKES
DESIGNED BY: S. SCRIBNER	CHECKED BY: S. SCRIBNER
IPARM: s78f219typ.i	SHEET 73 OF 103

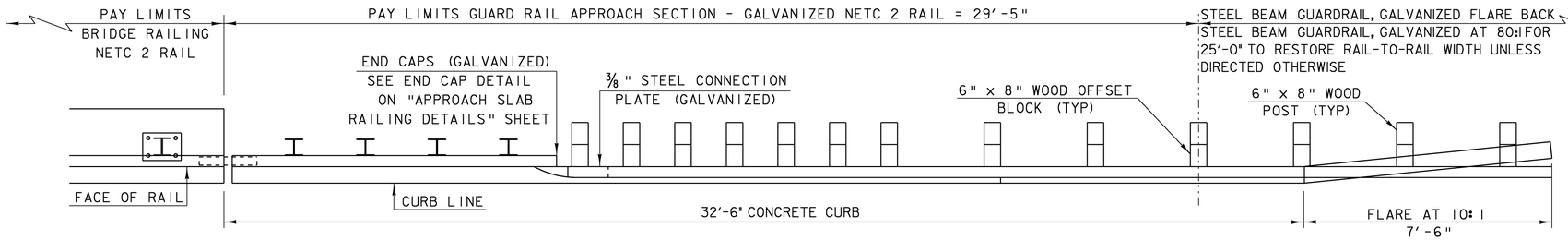

RAILING TRANSITION PLAN

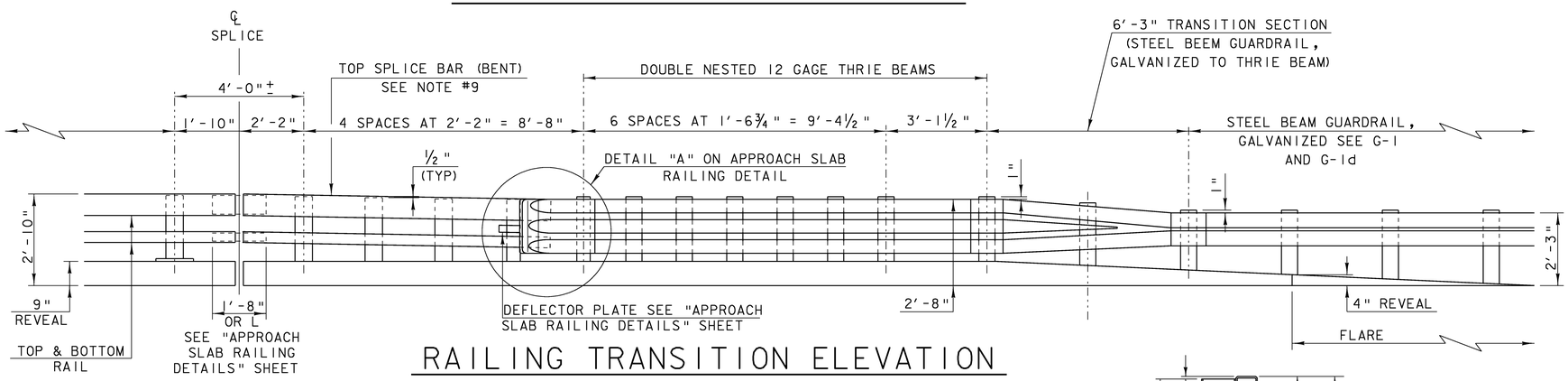

RAILING TRANSITION ELEVATION

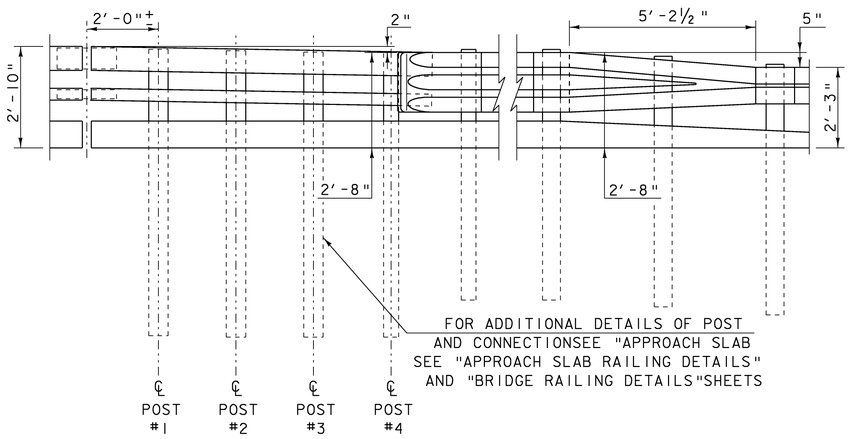

ELEVATION

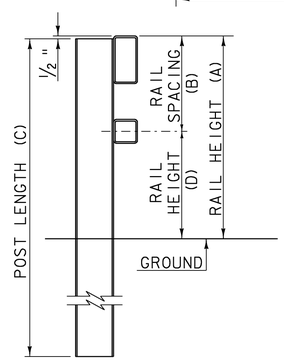

TYPICAL SECTION

POST NUMBER	RAIL HEIGHT (A)	RAIL SPACING (B)	POST LENGTH (C)	RAIL HEIGHT (D)
1	2'-9 1/2"	1'-3 3/4"	8'-0"	1'-5 3/4"
2	2'-9"	1'-3 1/2"	8'-0"	1'-5 1/2"
3	2'-8 1/2"	1'-3 3/16"	8'-0"	1'-5 5/16"
4	2'-8"	1'-2 7/8"	8'-0"	1'-5 1/8"

NOTES

1. REFER TO BRIDGE RAILING DETAILS AND APPROACH SLAB RAILING DETAILS FOR ADDITIONAL DETAILS, NOTES AND MATERIAL SPECIFICATIONS.
2. PAYMENT FOR GUARD RAIL APPROACH SECTION - NETC 2 RAIL SHALL INCLUDE THE TERMINAL CONNECTOR, THE CONNECTION PLATE, THE DEFLECTOR PLATE, RAIL, POSTS, BLOCKS AND ATTACHMENT HARDWARE.
3. THE REFLECTORIZED ALUMINUM DELINEATION IS TO BE ERECTED EVERY 30' (OR CLOSEST POST) WITH A 5/8 " DIAMETER BOLT. DELINEATORS SHALL MEET SPECIFICATION REQUIREMENTS FOR ASTM B209 ALLOY 5052-H32.
4. REFLECTIVE MATERIAL SHALL MEET REQUIREMENTS OF SUBSECTION 750.08 AND SHALL BE OF ENCAPSULATED LENS SILVER OR AMBER. AMBER IS TO BE INSTALLED ON THE DRIVER'S LEFT AND SILVER ON THEIR RIGHT.
5. NOTE NOT USED.
6. ALL APPROACH RAIL SPLICES SHALL BE LAPPED IN THE DIRECTION OF TRAFFIC FLOW.
7. ALL BRIDGE APPROACH RAIL MATERIALS, DIMENSION SIZES AND NOTES SHALL BE THE SAME AS THOSE OF THE BRIDGE RAIL, UNLESS OTHERWISE NOTED.
8. APPROACH RAIL BOLTS SHALL BE ASTM A307 GRADE A AND NUTS SHALL BE AASHTO M291 (ASTM A563 GRADE A OR BETTER (GALVANIZED). WASHERS SHALL BE ASTM F844.
9. WELD TOP SPLICE BAR TO FIT BEND. USE COMPLETE PENETRATION WELD (B-U2).
10. THE CONCRETE CURB OFF OF THE APPROACH SLAB WILL BE PAID FOR AS ITEM 616.28, "CAST-IN-PLACE CONCRETE CURB, TYPE B." SEE STANDARD C-10.

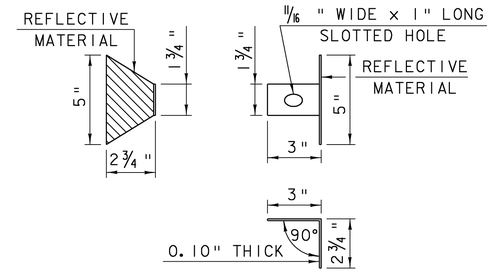

DELINEATION DEVICE DETAILS

APPROACH RAILING DETAILS

PROJECT NAME: MORETOWN-MIDDLESEX	
PROJECT NUMBER: BRS 0284(14)	
FILE NAME: /78f219/str2/sf219frm.dgn	PLOT DATE: 15-JUN-2009
PROJECT LEADER: EVANS-MONGEON	DRAWN BY: G. ROKES
DESIGNED BY: S. SCRIBNER	CHECKED BY: S. SCRIBNER
IPARM: s78f219typ.1	SHEET 74 OF 103

STATE OF VERMONT
AGENCY OF TRANSPORTATION

RIGHT - OF - WAY DETAIL SHEET

TABLE OF PROPERTY ACQUISITION

PARCEL NO.	PROPERTY OWNER	SHEET NO.	BEGINNING STATION	ENDING STATION	TAKE	REMAINDER	RIGHT			RECORDING DATA					REMARKS
					AREA±	AREA±	TYPE	(T)/(P)	AREA ±	TITLE	DATE	TOWN / CITY	BOOK	PAGE	
1A	CARTER, DREW L. & ROBERTA L.	18	261+00.00 RT	264+62.64 RT	0.08A					WD	02/02/09	MORETOWN	86	351-353	3,323 SF± SUBJECT TO STORM WATER PERMIT
			261+24 RT	DRIVE STA.69+06 RT			CONST.	(T)	0.13A						INC. PDF & EROSION CONTROL
			262+90 RT	264+85 RT			SLOPE	(T)	205 SF						
			265+34 RT				DRIVE	(T)							14' GRAVEL, LENGTH 240' MM 0315
1B		18,19	TH9 105+84.32 LT	TH9 105+33.04 LT	0.02A										1,017 SF± SUBJECT TO STORM WATER PERMIT
			DRIVE STA 69+06 LT	TH9 105+29 LT			CONST.	(T)	0.09A						INC. PDF & E. C. 4,072 SF±
			265+88 RT	TH9 105+65 LT			SLOPE	(T)	0.01A						605 SF±
			266+53 RT.				REMOVE	(T)							EXISTING DRIVE ACCESS TO US RTE 2
1C		18,19	261+00.00 RT	TH9 105+52.69 RT	0.35A		ALL R.T. & L								HWY EASE. US RTE 2 SUBJECT TO STORM WATER PERMIT
2A	LARSEN, JONATHAN Z. JOINED BY VERMONT LAND TRUST, INC.	19	TH9 105+49.12 LT	TH9 103+16.75 LT.	0.08A							MORETOWN			3700 SF SUBJET TO STORM WATER PERMIT
			TH9 105+33.04 LT.	TH9 103+24 LT.			CONST.	(T)	0.04A						1,970 SF±; INC. PDF & E.C.
			TH9 103+56 LT	TH9 103+43 LT.			DITCH	(P)	93 SF						
2B		19	TH9 103+01 RT	TH9 103+40 RT			CONST.	(T)	734 SF						INC. PDF & EROSION CONTROL
			TH9 103+15 RT	TH9 103+35 RT			CHANNEL	(P)	360 SF						
			TH9 103+25 RT	TH9 103+30 RT			SLOPE	(T)	12 SF						
			TH9 103+40 RT	TH9 103+45 RT			SLOPE	(T)	20 SF						
2C		19	TH9 105+49.12 LT	269+67.85 RT	0.15A		ALL R.T. & L								HWY EASE. US RTE 2 & TH9

TABLE OF REVISIONS

REVISION NO.	SHEET NO.	DESCRIPTION	DATE
1	16,18,19	PARCEL NO. 2 LARSEN. ADD VERMONT LAND TRUST TO TITLE. PER C.O. 9531	07/23/08
		MADE BY: MT APPROVED BY: HP	
2	16,18,19	PARCEL NO. 2 LARSEN. CHANGE 2B TO 2A. CHANGE 2C TO 2B. ADD NEW PARCEL 2C. REMOVE VT LAND TRUST FROM LAYOUT ON LEFT SIDE OF CENTER LINE. ADD NEW STATIONS AND RUNNING DISTANCES. PER C.O. 9532	08/13/08
		MADE BY: MT APPROVED BY: HP	
3	17,19,20	PARCEL NO. 3 COLLINS. CHANGE TITLE TO TEBEAU, MARY KAY, F/K/A COLLINS, MARY KAY. PER C.O. 9533	08/13/08
		MADE BY: MT APPROVED BY: HP	
4	17,18,19	PARCEL NO. 8 LARSEN. CREATE NEW PARCEL. LARSEN, JONATHAN Z. JOINED BY THE VERMONT LAND TRUST, INC. 2A IS NOW 8A. PART OF 2D IS NOW 8B. ADD NEW AREAS AND LINE WORK ON LAYOUT. ADD NEW STATIONS AND DISTANCES. PER C.O. 9534	08/13/08
		MADE BY: MT APPROVED BY: HP	
		ELECTRONIC FILES TO STRUCTURES	01/29/09

PLOT DATE 05/14/09

PLAN LEGEND

- EXISTING RIGHT-OF-WAY
- TAKING WITH ACCESS
- TAKING WITHOUT ACCESS
- CZ — CLEAR ZONE
- P / L — PROPERTY LINE
- TOE OF SLOPE
- TOP OF CUT
- SR (P) — SLOPE RIGHT
- CONST. (T) — CONSTRUCTION RIGHT
- PDF — PDF — PROJECT DEMARCATION FENCE

EC -EROSION CONTROL
(P) -PERMANENT
(T) -TEMPORARY
DR. -DRAINAGE RIGHT
DIT. -DITCHING RIGHT
CH. -CHANNEL RIGHT
DRIVE -DRIVE RIGHT
CUL. -CULVERT RIGHT
C&T -CLEARING & TRIMMING RIGHT
SR -SLOPE RIGHT
UE -UTILITY EASEMENT

APPROVED: HARRY PETROVS DATE: 06-23-08
CHIEF, PLANS & TITLES

PROJECT NAME: MORETOWN-MIDDLESEX
PROJECT NUMBER: BRS 0284(14)

FILE NAME: 78F219ENGROWDETAILSHEE
PROJECT LEADER: M. EVANS-MONGEON
DESIGNED BY: L. RUSSELL
R.O.W. SHEET 16 of 20
PLOT DATE: Date
DRAWN BY: 0
CHECKED BY: 0
SHEET 75 OF 103

STATE OF VERMONT
AGENCY OF TRANSPORTATION

RIGHT - OF - WAY DETAIL SHEET

TABLE OF PROPERTY ACQUISITION

PARCEL NO.	PROPERTY OWNER	SHEET NO.	BEGINNING STATION	ENDING STATION	TAKE	REMAINDER	RIGHT			RECORDING DATA					REMARKS
					AREA±	AREA±	TYPE	(T)/(P)	AREA ±	TITLE	DATE	TOWN / CITY	BOOK	PAGE	
3A	TEBEAU, MARY KAY	19,20	271+75.84 RT	275+50.00 RT.	0.18A					WD	03/02/09	MIDDLESEX	92	187-	SUBJECT TO STORM WATER PERMIT
	F/K/A COLLINS, MARY KAY		272+17 RT	276+12 RT			CONST.	(T)	0.07A					188	INC. PDF & EROSION CONTROL 3000SF
			272+66 RT	273+58 RT			SLOPE	(T)	630 SF						
			273+65 RT	273+75 RT			SLOPE	(T)	6 SF						
3B		19,20	271+65.44 RT	276+12.00 RT.	0.23A		ALL R.T. & L								HWY EASE. US RTE 2 SUBJECT TO STORM WATER PERMIT
4	TOWN OF MORETOWN	19	TH9 104+05.45 RT	TH9 103+44.61 RT	1,582 SF		ALL R.T. & L			QCD	10/14/08	MORETOWN	85	671-672	HWY EASE. US RTE 2
			TH9 103+71.00 CL	TH9 103+16.75 CL			APPROACH	(T)							TH #9-LOVERS LANE
5	WASHINGTON ELECTRIC CO-OP, INC.	18,19	264+50.00 LT.	TH9 103+82.53 RT.			ALL R.T. & L		0.29 A+	QCD	12/15/08	MORETOWN	86	214-215	UTILITY EASEMENT OVER LARSEN'S SUBJECT TO STORM WATER PERMIT
6	FAIRPOINT COMMUNICATION INC.														UTILITY
7	COMCAST OF CONNECTICUT, ETC., LLC														UTILITY
8A	LARSEN, JONATHAN Z.	18,19	261+00.00 LT	269+52.03 RT	1.43A					WD	05/06/09	MORETOWN	87	383-384	SUBJECT TO STORM WATER PERMIT
			261+76 LT	262+50 LT			CONST.	(T)	180 SF						INC. PDF & EROSION CONTROL
			262+82 LT	263+16 LT			CONST.	(T)	210 SF						INC. PDF & E.C.
			263+00 LT												14' GRAVEL DRIVE, MM 0311
			266+71 LT	268+41.31 LT			UTILITY	(P)	1677 SF						
			TH9 104+75 RT.				REMOVE	(T)							DRIVE
8B		18,19	261+00.00 LT	269+61.67 RT	0.52 A		ALL R.T. & L								HWY EASE. US RTE SUBJECT TO STORM WATER PERMIT
	RELINQUISHMENT NO. I	18,19	266.5342 RT	TH9 103+16.75 LT											0.27 A±
	MAINTENANCE AGREEMENT ZONE #1	18	TH9 106+39.00 CL	TH9 106+03.87 CL											TH9. LENGTH 35.13'

TABLE OF REVISIONS

REVISION NO.	SHEET NO.	DESCRIPTION	DATE

PLOT DATE 05/14/09

PLAN LEGEND

- EXISTING RIGHT-OF-WAY
- TAKING WITH ACCESS
- TAKING WITHOUT ACCESS
- CZ — CLEAR ZONE
- P / L — PROPERTY LINE
- TOE OF SLOPE
- TOP OF CUT
- SR (P) — SLOPE RIGHT
- CONST. (T) — CONSTRUCTION RIGHT
- PDF ——— PDF — PROJECT DEMARCATION FENCE

EC	-EROSION CONTROL
(P)	-PERMANENT
(T)	-TEMPORARY
DR.	-DRAINAGE RIGHT
DIT.	-DITCHING RIGHT
CH.	-CHANNEL RIGHT
DRIVE	-DRIVE RIGHT
CUL.	-CULVERT RIGHT
C&T	-CLEARING & TRIMMING RIGHT
SR	-SLOPE RIGHT
UE	-UTILITY EASEMENT

APPROVED: HARRY PETROVS DATE: 06-23-08
CHIEF, PLANS & TITLES

PROJECT NAME: MORETOWN-MIDDLESEX
PROJECT NUMBER: BRS 0284(14)

FILE NAME: 78F219ENGROWDETAILSHEE
PROJECT LEADER: M. EVANS-MONGEON
DESIGNED BY: L. RUSSELL
R.O.W. SHEET 17 of 20

PLOT DATE: 12/9/98
DRAWN BY: 0
CHECKED BY: 0
SHEET 76 OF 103

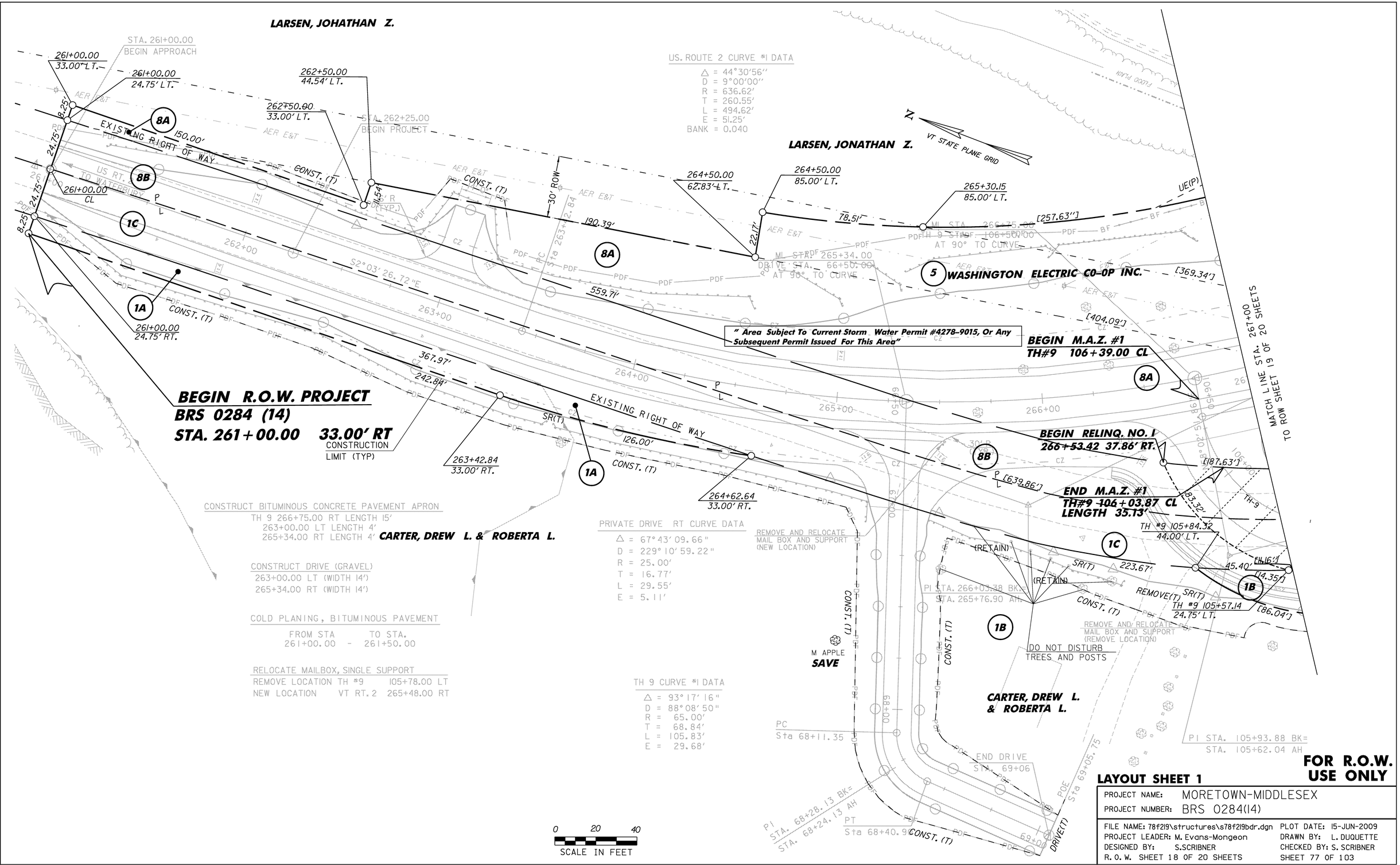

FOR R.O.W. USE ONLY

LAYOUT SHEET 1

PROJECT NAME: MORETOWN-MIDDLESEX	
PROJECT NUMBER: BRS 0284(14)	
FILE NAME: 78f219\structures\s78f219bdr.dgn	PLOT DATE: 15-JUN-2009
PROJECT LEADER: M. Evans-Mongeon	DRAWN BY: L. DUQUETTE
DESIGNED BY: S.SCRIBNER	CHECKED BY: S. SCRIBNER
R. O. W. SHEET 18 OF 20 SHEETS	SHEET 77 OF 103

N

VT STATE PLANE GRID

TOWN LINE MIDDLESEX MORETOWN

ANCHOR FOR STEEL BEAM RAIL
VT RT. 2
267+97.50 LT
272+41.50 LT
272+64.00 RT
TH #9
105+08.00 RT

US ROUTE 2 CURVE #1 DATA
Δ = 44°30'56"
D = 9°00'00"
R = 636.620
T = 260.55
L = 494.58

REMOVAL AND DISPOSAL OF GUARDRAIL
268+72 86.8' RT ~ 269+36 85.8' RT
272+46 64.1' RT ~ 273+01 53.8' RT
272+38 42.8' RT ~ 273+00 87.2' RT
268+94 116.6' RT ~ 269+38 108.1' RT

GUARDRAIL APPROACH SECTION, GALVANIZED NETC 2 RAIL
268+29.22 ~ 268+58.72 LT
268+46.96 ~ 268+76.46 RT
271+83+.54 ~ 272+13.04 LT
272+02.32 ~ 272+31.82 RT

BRIDGE RAILING, GALVANIZED NETC 2 RAIL
268+58.72 ~ 271+83.54 LT
268+76.46 ~ 272+02.32 RT

CHAIN-LINK FENCE, 6 FEET
271+66.87 ~ 272+63.51LT
272+90.42 ~ 273+00.00 LT

STEEL BEAM GUARDRAIL, GALVANIZED
VT ROUTE 2
267+90.80 ~ 268+29.22 LT
267+00.00 ~ 268+46.96 RT
272+13.04 ~ 272+47.29 LT
272+31.82 ~ 272+70.47 RT
TH #9
105+01.44 ~ 106+06.50 RT

CONSTRUCT DRIVE (PAVED)
272+76.96 LT (30')

REMOVAL OF EXISTING FENCE
271+91.00 ~ 273+00.00 RT

CHAIN LINK FENCE FOR CHAIN LINK FENCE, 6 FEET
271+66.87 ~ 272+90.42 LT

CURB TO DOWNSPOUT
269+97.00 LT

CAST-IN-PLACE CONCRETE CURB, TYPE B
SEE "APPROACH RAILING DETAILS" FOR LENGTHS

STEEL BEAM GUARDRAIL, GALVANIZED
VT ROUTE 2
267+90.80 ~ 268+29.22 LT
267+00.00 ~ 268+46.96 RT
272+13.04 ~ 272+47.29 LT
272+31.82 ~ 272+70.47 RT
TH #9
105+01.44 ~ 106+06.50 RT

MAINLINE 271+43.50=
CHANNEL LINE 52+92.60
= 67°00'00" RT.

ML CURVE DATA
Δ = 40°28'28"
D = 12°00'00"
R = 477.4648'
T = 176.03'
L = 337.29'
E = 31.41'
BANK = 0.040

PROPOSED 90'x12'x 2' TREE BED FOR 7 TREES SEE LANDSCAPE TREE PLANTING DETAIL

WHITE SPRUCE IN A 15 FT X 10 FT BED SEE LANDSCAPE TREE PLANTING DETAIL

NEW CHAIN LINK

POTENTIAL SEDIMENT DEWATERING LOCATION, CONTRACTOR TO PROVIDE DETAILS AND METHODOLOGY WITH COFFERDAM DETAILS

STATE OF VERMONT

STA. 271+72.74
END BRIDGE

Sta 271+80.00

STA. 268+87.26
BEGIN BRIDGE

STA. 270+30.00
℄ PIER

" Area Subject To Current Storm Water Permit #4278-9015, Or Any Subsequent Permit Issued For This Area"

" Area Subject To Current Storm Water Permit #4278-9015, Or Any Subsequent Permit Issued For This Area"

POTENTIAL SEDIMENT DEWATERING LOCATION, CONTRACTOR TO PROVIDE DETAILS AND METHODOLOGY WITH COFFERDAM DETAILS

UE(P)

[257.63']

[369.34']

[404.09']

[639.86']

[187.63']

[431.19']

[353.25']

[186.05']

[86.04']

[114.35']

US RT. 2
TO WATERBURY

US RT. 2
TO MONTPELIER

TO ROW SHEET 18 OF 20 SHEETS
MATCH LINE STA. 267+00

MATCH LINE STA. 273+00
TO ROW SHEET 20 OF 20 SHEETS

268+41.31
85.00' LT.

268+37.45
85.00' LT.

3.86

201.86' ℄

S46°34'22.31"E

271+57.33
42.69' RT.

271+65.44
66.87' RT.

269+52.03
69.52' RT.

269+61.67
93.77' RT.

269+67.85
117.37' RT.

271+75.84
90.19' RT.

EXISTING PIER 1

EXISTING PIER 2

EXISTING ABUT 1

EXISTING ABUT 2

EXISTING ABUTMENTS TO BE REMOVED TO BELOW FINISHED GRADE. PIER TO BE REMOVED BELOW BOTTOM OF STREAM SEE GENERAL NOTES FOR ELEVATIONS.

LIMITS OF PROPOSED TEMP. CAUSEWAY PHASE I

LIMITS OF PROPOSED TEMP. CAUSEWAY PHASE II

LIMITS OF PROPOSED TEMP. CAUSEWAY PHASE III

CHAIN LINK FENCE TURNING POINTS

	STA.	OFF SET
F1	271+66.89	49.00 FT (LT)
F2	272+43.50	47.00 FT (LT)
F3	272+43.50	56.00 FT (LT)
F4	272+63.51	54.90 FT (LT)
F5	272+90.42	54.86 FT (LT)

① TH #9 STA. 103+50.00 LT NEW 18" CPEPES/CAAPES/PCCSPES

② TH #9 STA. 103+50.00 LT ~ 103+50.00 RT
NEW 18" PIPE LENGTH 56'-0" CPEP/CAAP/PCCSP

③ TH #9 STA. 103+50.00 RT NEW 18" CPEPES/CAAPES/PCCSPES

④ TH #9 STA. 104+33.00 RT REMOVE PIPE HEADWALL
-TRENCH EXCAVATION - ROCK

⑤ TH #9 STA. 104+33.00 ~ 104+44.00 LT
REMOVE 18" PIPE

⑥ TH #9 STA. 104+44.00 LT REMOVE PIPE HEADWALL
-TRENCH EXCAVATION OF ROCK

US 2 STA. 271+85.4 49' LT REMOVE PIPE WITHIN

TH 9 CURVE #1 DATA
Δ = 93°17'16"
D = 88°08'50"
R = 65.00'
T = 68.84'
L = 105.83'
E = 29.68'

TH 9 CURVE #2 DATA
Δ = 40°39'38"
D = 28°38'52"
R = 200.00'
T = 74.39'
L = 141.93'
E = 13.24'

TH 9 103+82.53
52.25 RT.

TH 9 104+33.08
26.00' RT.

TH 9 103+59.70
43.00' RT.

TH 9 103+44.61
26.00' RT.

TH 9 104+05.45
9.07' RT.

TH 9 104+34.39
24.75' LT.

TH 9 104+58.68
44.00' LT.

TH 9 103+35.95
24.75' LT.

TH 9 104+98.82
24.75' LT.

TH 9 103+95.73
13.82' LT.

TH 9 105+33.04
44.00' LT.

TH 9 105+49.12
22.40' LT.

TH 9 105+52.69
1.98' RT.

TH 9 105+46.72
24.75' LT.

TH 9 105+25.04
24.75' LT.

REMOVE (T)

CHANNEL(P)

CONST. (T)

SR(T)

APPROACH (T)

DITCH(P)

CONST(T)

1A 1B 1C 2A 2B 2C 3A 3B 4 5 7 8A 8B

LARSEN, JONATHAN Z.
JOINED BY VERMONT LAND TRUST, INC.

CARTER, DREW L.
& ROBERTA L.

WASHINGTON ELECTRIC CO-OP INC.

TOWN OF MORETOWN

TEBEAU, MARY KAY
F/K/A COLLINS, MARY KAY

END RELINQ. NO
TH #9 103+1
2

TH #9
103+50.00 29' RT (
103+50.00 26' LT (WHITE
105+05.00 18' RT (BLUE)
272+
272+36.00

0 20 40
SCALE IN FEET

FOR R.O.W. USE ONLY

LAYOUT SHEET 2

PROJECT NAME: MORETOWN-MIDDLESEX
PROJECT NUMBER: BRS 0284(14)

FILE NAME: 78f219\structures\s78f219bdr.dgn
PROJECT LEADER: M. Evans-Mongeon
DESIGNED BY: S.SCRIBNER
R. O. W. SHEET 19 OF 20 SHEETS

PLOT DATE: 15-JUN-2009
DRAWN BY: L.DUQUETTE
CHECKED BY: S. SCRIBNER
SHEET 78 OF 103

CHAIN LINK FENCE TURNING POINTS		
POINT	STA.	OFF SET
F6	273+11.00	56.00 FT (LT)
F7	273+19.00	31.00 FT (LT)
F8	273+65.95	38.10 FT (LT)
F9	273+83.99	42.29 FT (LT)
F10	274+50.00	64.48 FT (LT)

COLD PLANING, BITUMINOUS PAVEMENT
277+75.00 ~ 278+50.00

REMOVAL OF EXISTING FENCE
273+00.00 ~ 274+76.26 LT

CHAIN-LINK FENCE (6')
273+00.00 ~ 273+65.95 LT
273+83.99 ~ 274+76.08 LT

GATE FOR CHAIN-LINK FENCE, 6 FEET
273+65.95 ~ 273+83.99 LT

CONSTRUCT DRIVE (PAVED)
273+75.00 LT (WIDTH 20')

REMOVAL AND DISPOSAL OF GUARDRAIL
272+38.00 44.0' ~ 273+37.00 14.6' RT
272+44.00 64.7' ~ 274+50.00 26.1' RT

DELINEATOR WITH STEEL POST
VT ROUTE 2
273+87.00 56' RT (WHITE)
274+54.00 51' LT (WHITE)

7 FILL EXISTING 18" ACCGMP WITH SPECIAL PROVISION (CONTROLLED DENSITY (FLOWABLE) FILL)

8 STA. 274+55.15 REMOVE EXISTING DROP INLET OFFSET 52'-2" LT -TRENCH EXCAVATION OF ROCK

9 NEW PRECAST REINFORCED CONCRETE PIPE DI WITH CAST IRON GRATE 274+55.15 OFFSET 52'-2" LT

10 NEW 18" CPEP/CAAP/PCCSP PIPE 273+83.55 OFFSET 60.60' RT TO 274+54.65 OFFSET 51.09' LT LENGTH = 126'-3")

11 NEW 18" CPEPES/CAAPES/CSPES 273+83.55 OFFSET 60.60' RT

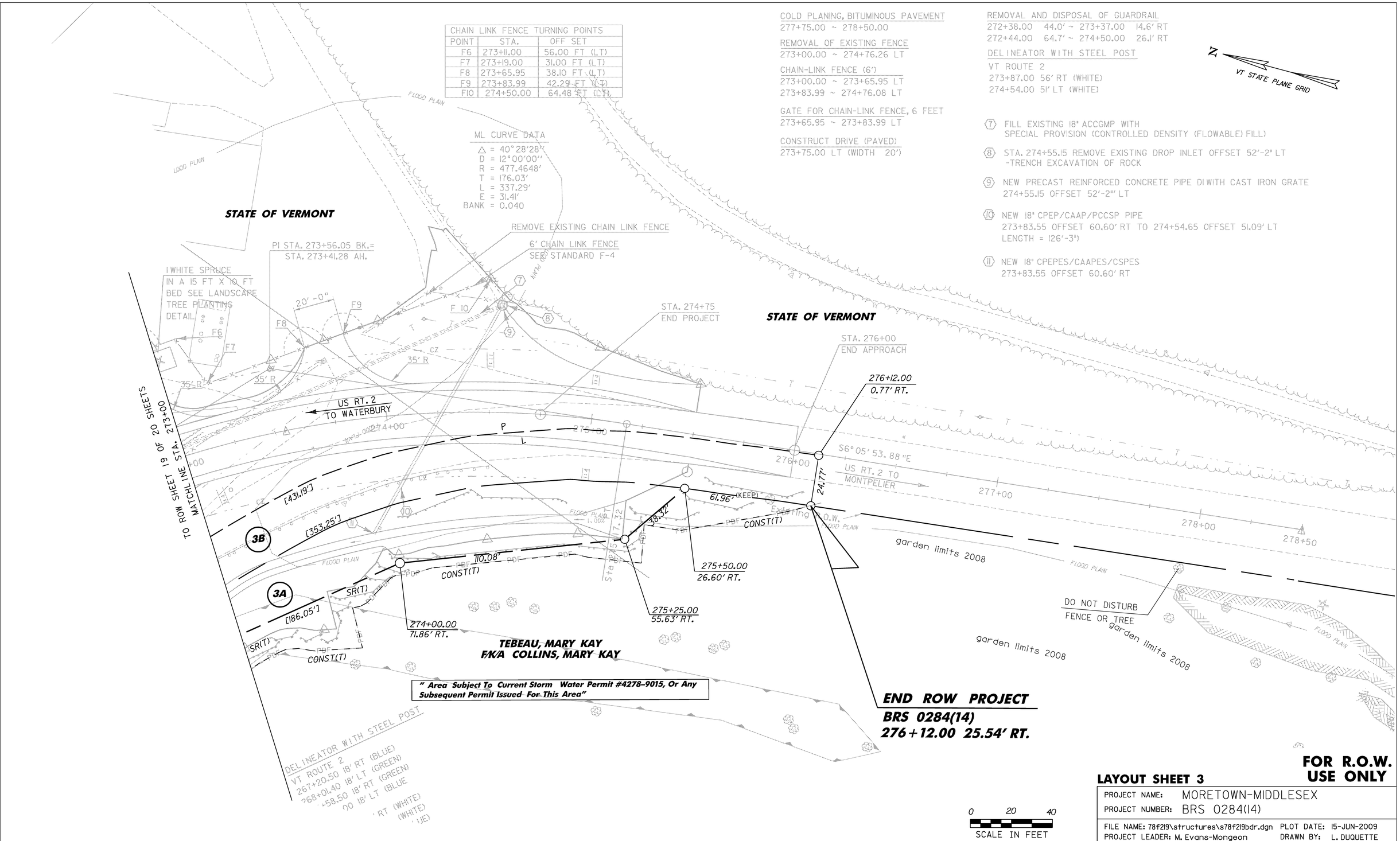

FOR R.O.W. USE ONLY

LAYOUT SHEET 3

PROJECT NAME: MORETOWN-MIDDLESEX	
PROJECT NUMBER: BRS 0284(14)	
FILE NAME: 78f219\structures\s78f219bdr.dgn	PLOT DATE: 15-JUN-2009
PROJECT LEADER: M. Evans-Mongeon	DRAWN BY: L. DUQUETTE
DESIGNED BY: S.SCRIBNER	CHECKED BY: S. SCRIBNER
R. O. W. SHEET 20 OF 20 SHEETS	SHEET 79 OF 103

BANKING DIAGRAM

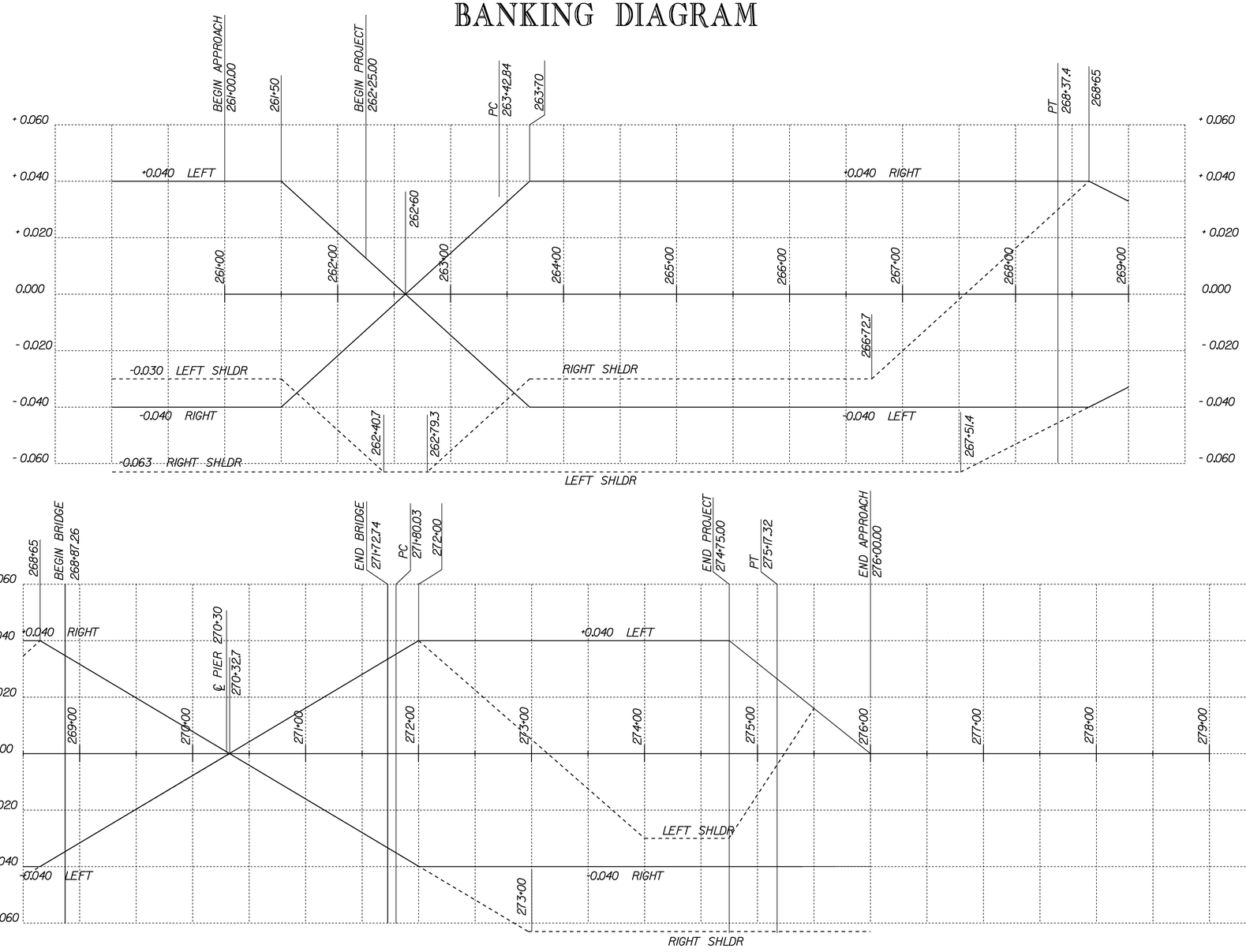

BANKING DIAGRAM

PROJECT NAME:	MORETOWN-MIDDLESEX
PROJECT NUMBER:	BRS 0284(14)
FILE NAME: /78f219/str/sf219frm.dgn	PLOT DATE: 15-JUN-2009
PROJECT LEADER: M. Evans-Mongeon	DRAWN BY: L. Russell
DESIGNED BY: L. Russell	CHECKED BY: W. Farley
IPARM: s78f219bank.i	SHEET 80 OF 103

MATERIAL TRANSITION DETAIL

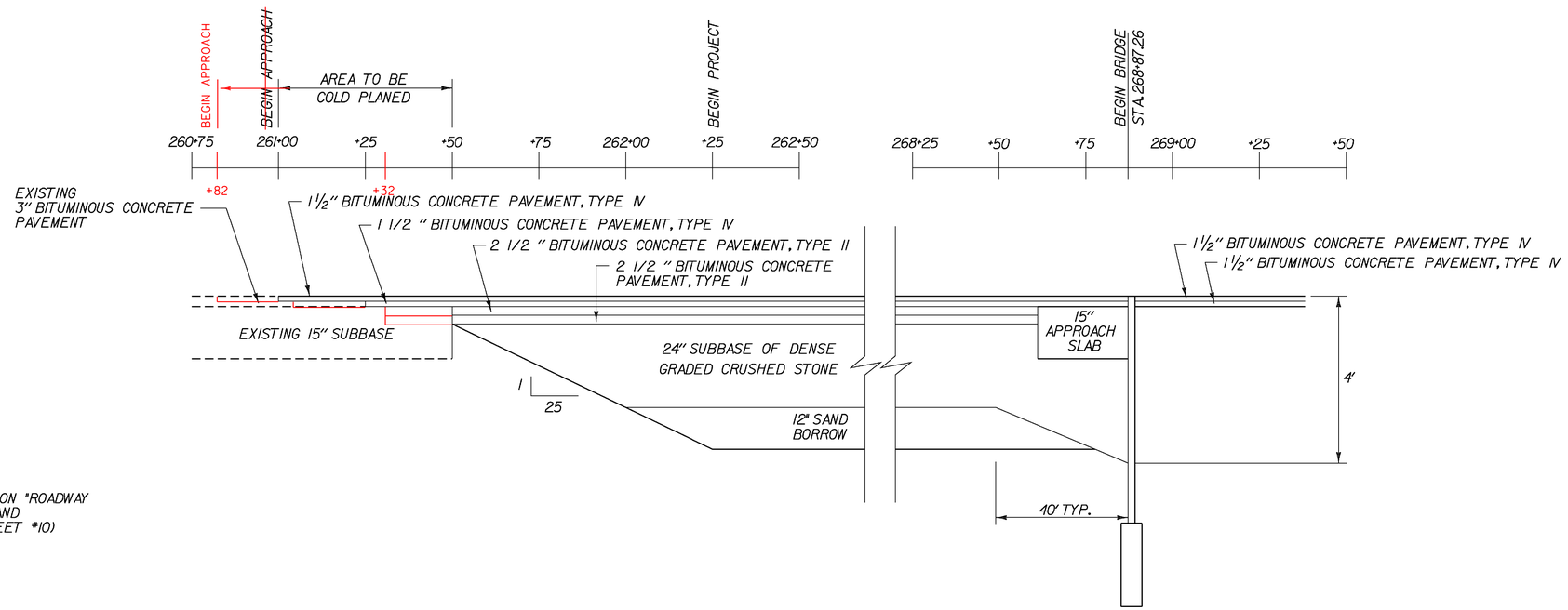

NOTE: 1. SHOULDER TRANSITIONS ARE ON "ROADWAY CROSS SECTION SHEET #1" AND "ROADWAY CROSS SECTION SHEET #10)

HORIZONTAL SCALE 1" = 20'-0
20 0 20

VERTICAL SCALE 1" = 20'
20' 0 20'

MATERIAL TRANSITION DIAGRAM

PROJECT NAME:	MORETOWN-MIDDLESEX
PROJECT NUMBER:	BRS 0284(14)

FILE NAME: /78f219/str/sf219frm.dgn	PLOT DATE: 15-JUN-2009
PROJECT LEADER: M. Evans-Mongeon	DRAWN BY: L. DUQUETTE
DESIGNED BY: S. SCRIBNER	CHECKED BY: S. SCRIBNER
IPARM: s78f219mt.1	SHEET 81 OF 103

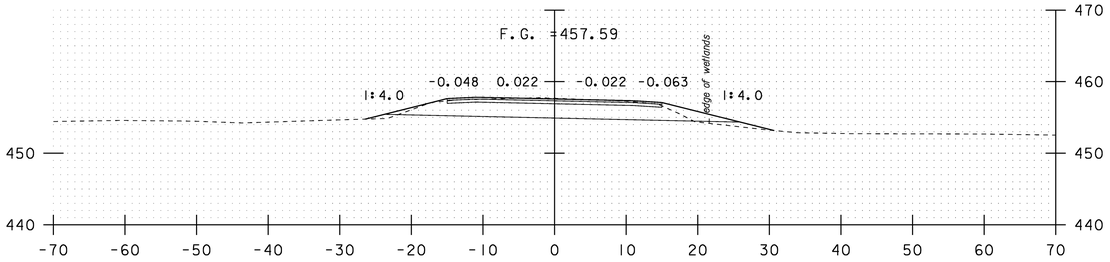

262+00

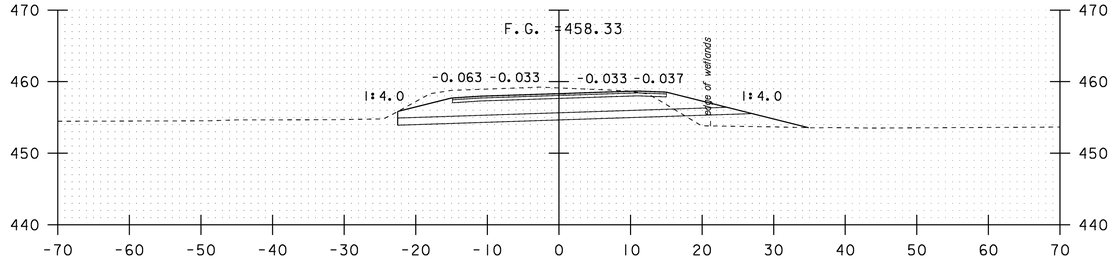

263+50

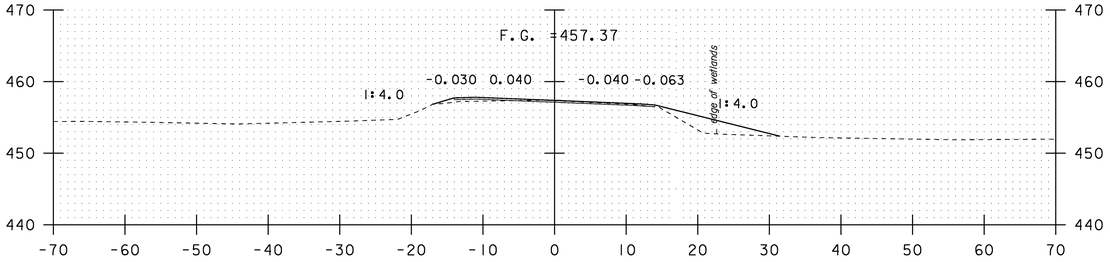

261+50

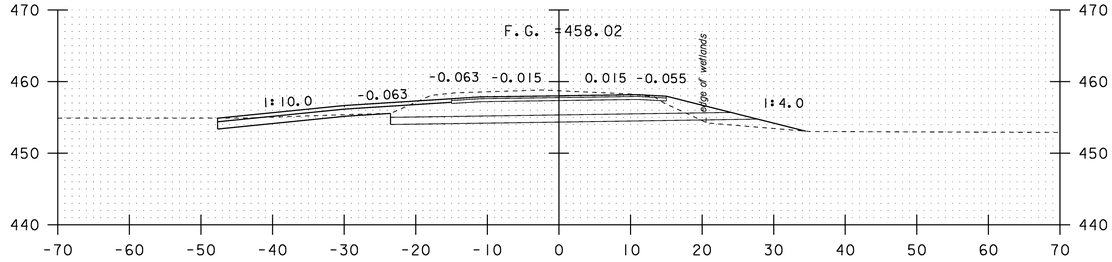

263+00
FIELD DRIVE LEFT

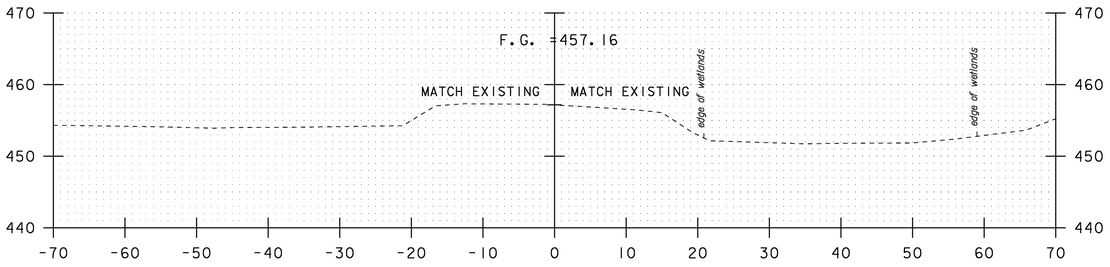

261+00
BEGIN APPROACH

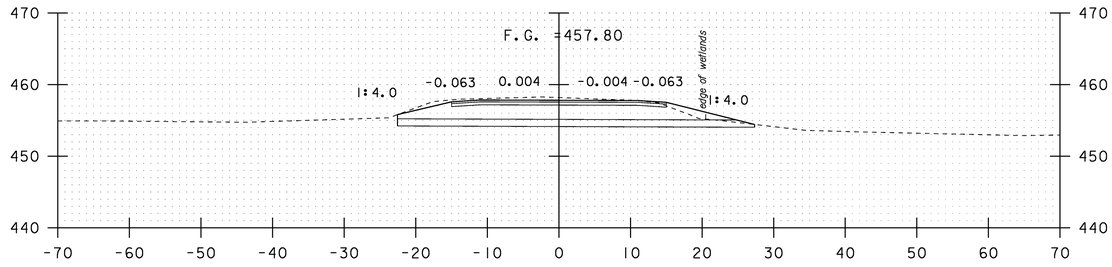

262+50
END APPROACH
262+25 BEGIN PROJECT

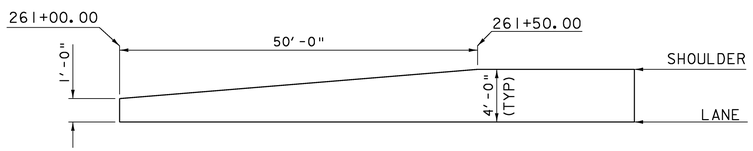

SHOULDER TRANSITION DETAIL 261+00.00 LT
NTS

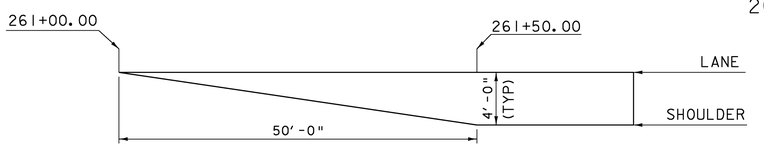

SHOULDER TRANSITION DETAIL 261+00.00 RT
NTS

SCALE 1" = 10'-0
10 0 10

STA. 261+00 TO STA. 263+50

ROADWAY CROSS SECTION SHEET #1

PROJECT NAME: MORETOWN-MIDDLESEX
PROJECT NUMBER: BRS 0284(14)

FILE NAME: 78f219/str/s78f219xs3.dgn
PROJECT LEADER: M. Evans-Mongeon
DESIGNED BY: S. SCRIBNER
IPARM: s7f219xsl.I
PLOT DATE: 15-JUN-2009
DRAWN BY: L. DUQUETTE
CHECKED BY: S. SCRIBNER
SHEET 82 OF 103

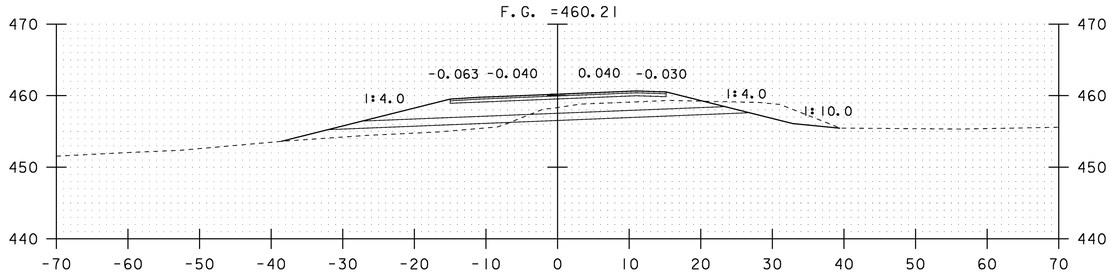

265+00

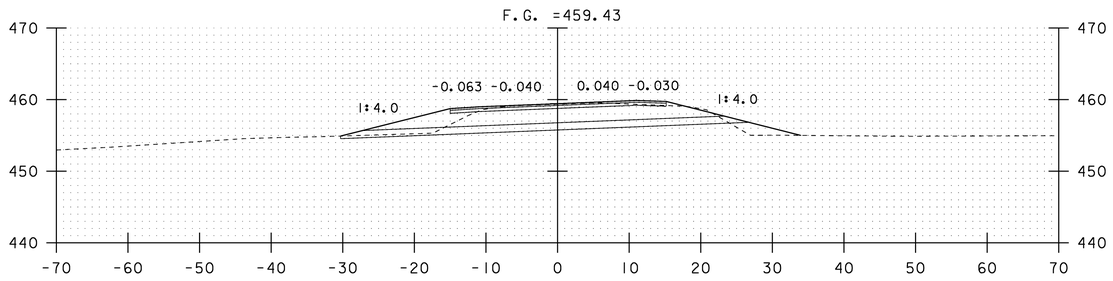

264+50

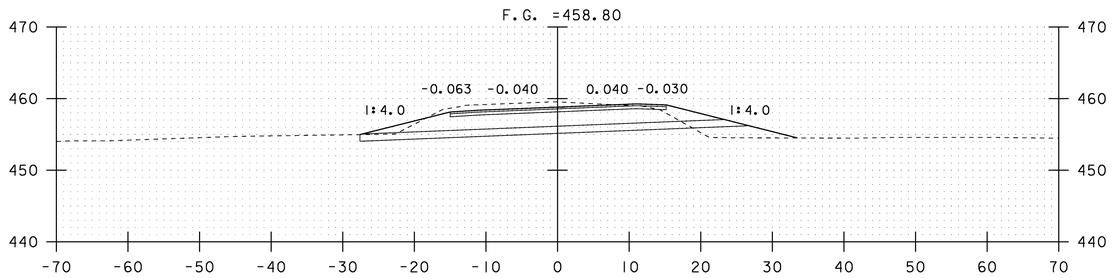

264+00

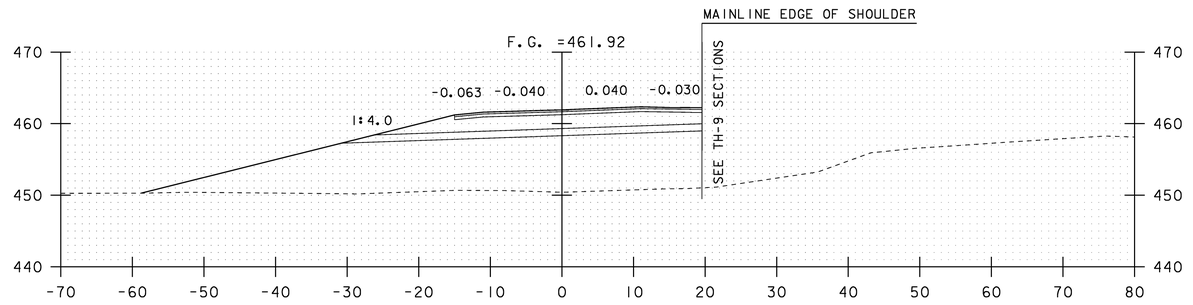

266+50

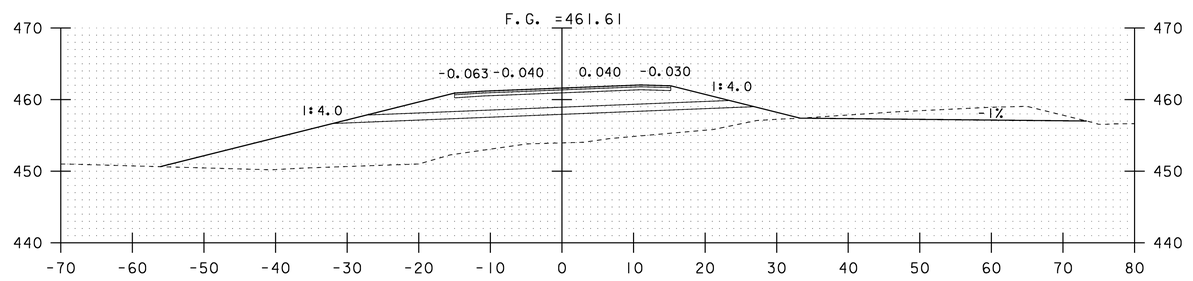

266+00

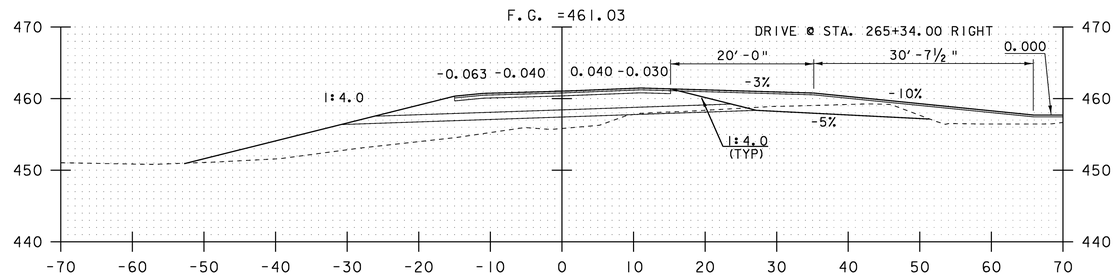

265+50

SCALE 1" = 10'-0
10 0 10

STA. 264+00 TO STA. 266+50

ROADWAY CROSS SECTION SHEET #2

PROJECT NAME:	MORETOWN-MIDDLESEX
PROJECT NUMBER:	BRS 0284(14)

FILE NAME: 78f219/str/s78f219xs3.dgn	PLOT DATE: 15-JUN-2009
PROJECT LEADER: M. Evans-Mongeon	DRAWN BY: L. DUQUETTE
DESIGNED BY: S. SCRIBNER	CHECKED BY: S. SCRIBNER
IPARM: s7f219xsl.I	SHEET 83 OF 103

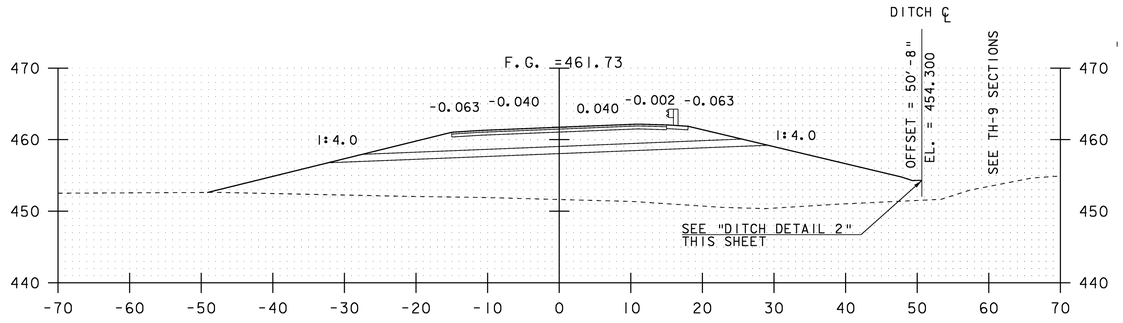

267+50

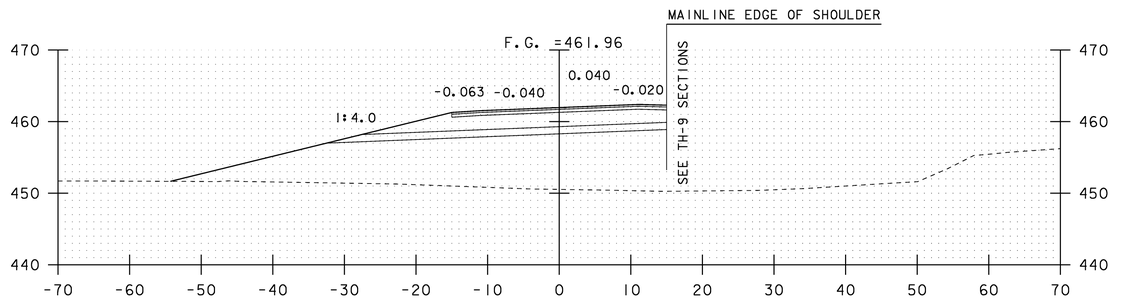

267+00

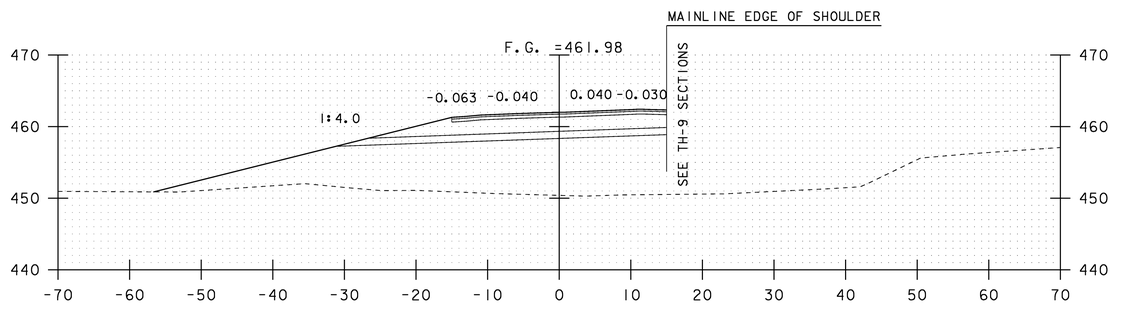

266+75

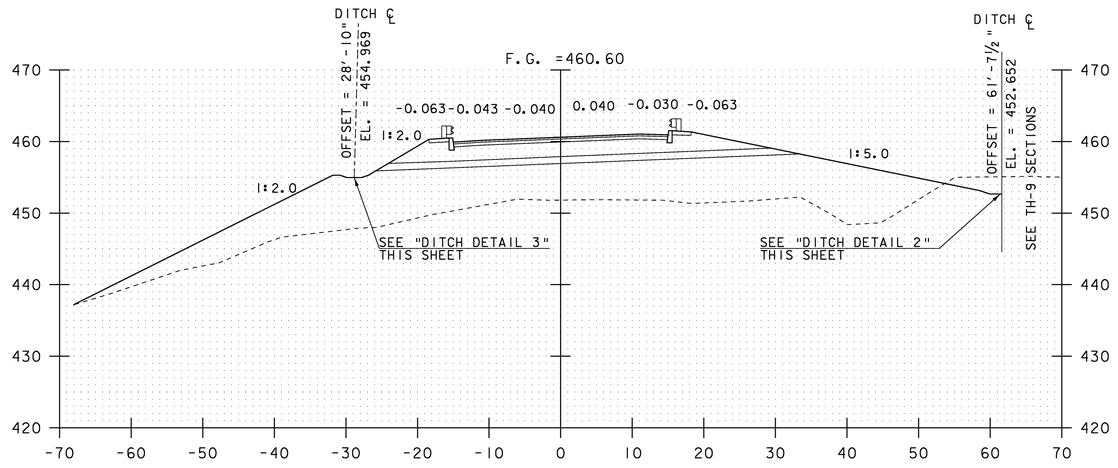

268+50

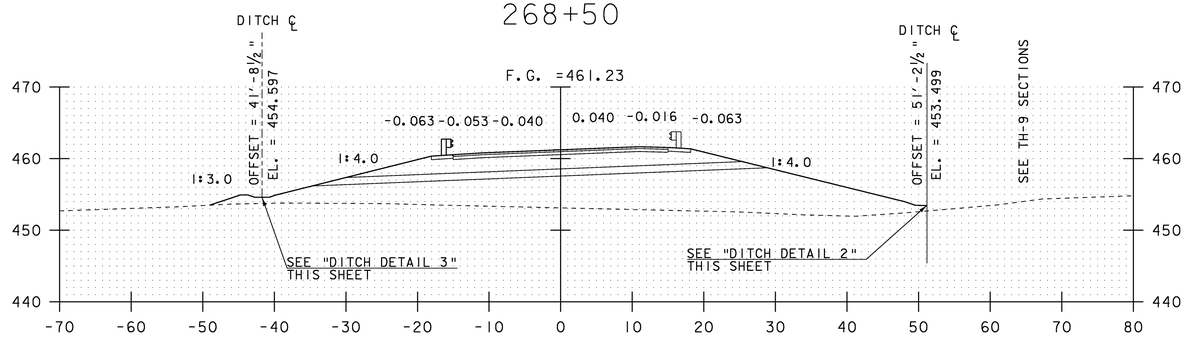

268+00

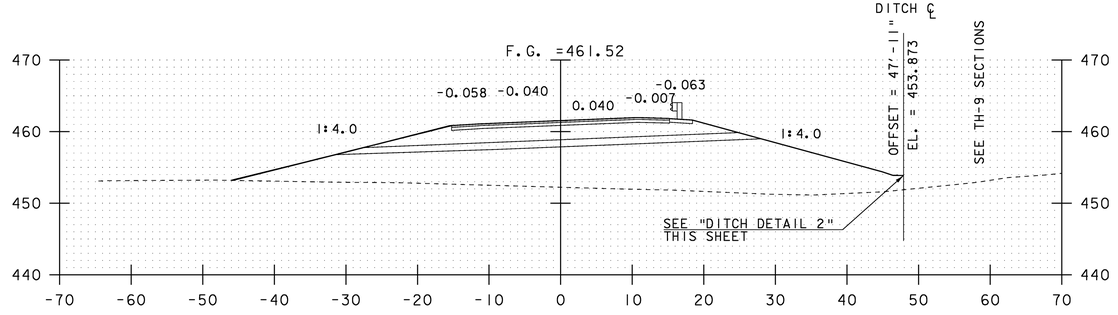

267+75

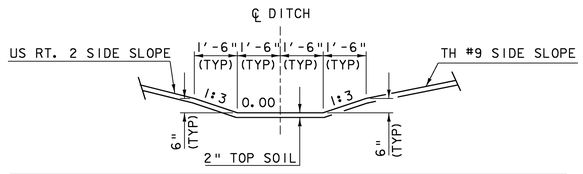

NTS

DITCH DETAIL 2

STA. 267+25.00 RT TO 269+19.28 RT

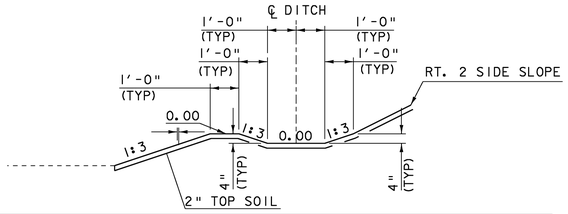

NTS

DITCH DETAIL 3

STA. 267+94.00 LT TO 268+70.61 LT

NOTE: DITCH OFFSET IS MEASURED FROM THE ROADWAY CENTERLINE TO CENTER OF DITCH

SCALE 1" = 10'-0

10 0 10

STA. 266+75 TO STA. 268+50

ROADWAY CROSS SECTION SHEET #3

PROJECT NAME: MORETOWN-MIDDLESEX
PROJECT NUMBER: BRS 0284(14)

FILE NAME: 78f219/str/s78f219xs3.dgn
PROJECT LEADER: M. Evans-Mongeon
DESIGNED BY: S. SCRIBNER
IPARM: s7f219xsl.I

PLOT DATE: 15-JUN-2009
DRAWN BY: L. DUQUETTE
CHECKED BY: S. SCRIBNER
SHEET 84 OF 103

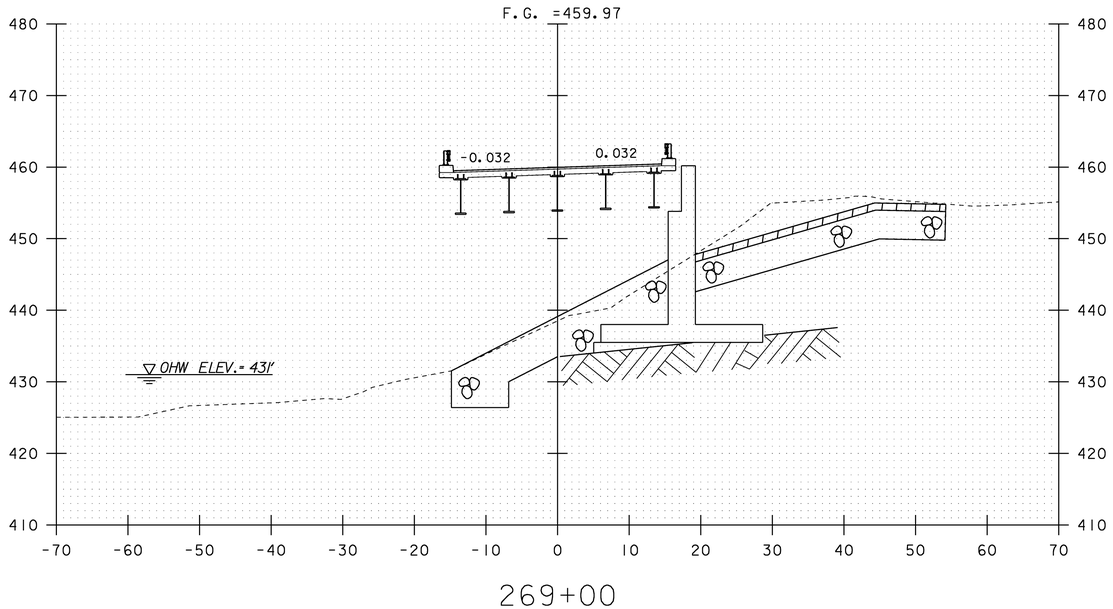

269+00

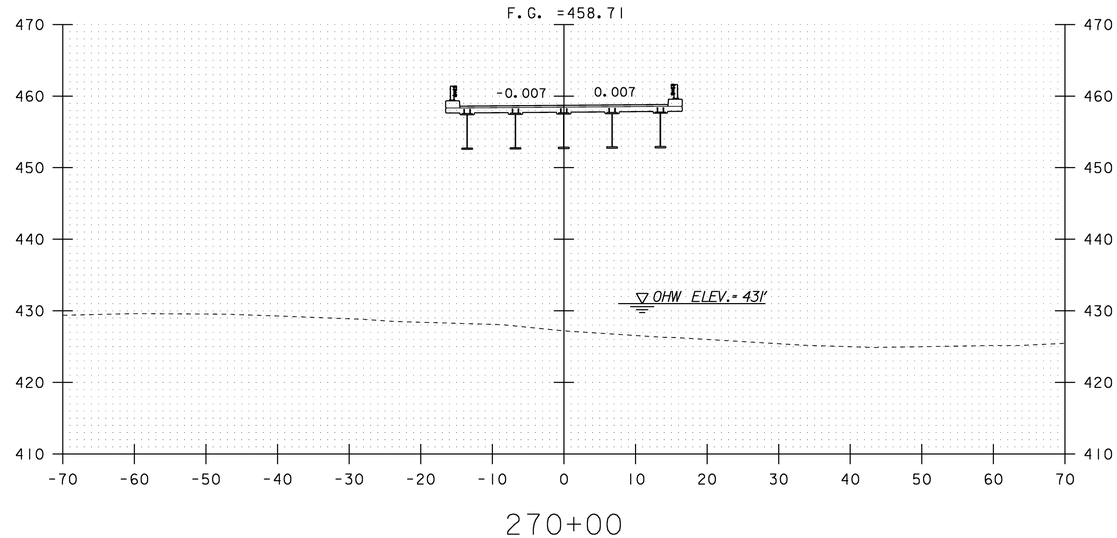

270+00

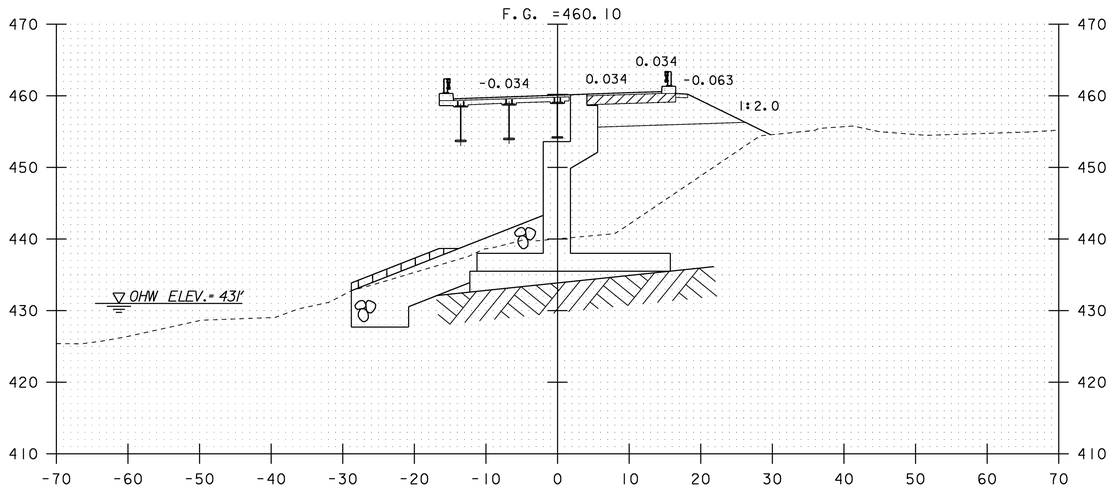

268+90
BEGIN BRIDGE 268+87.26

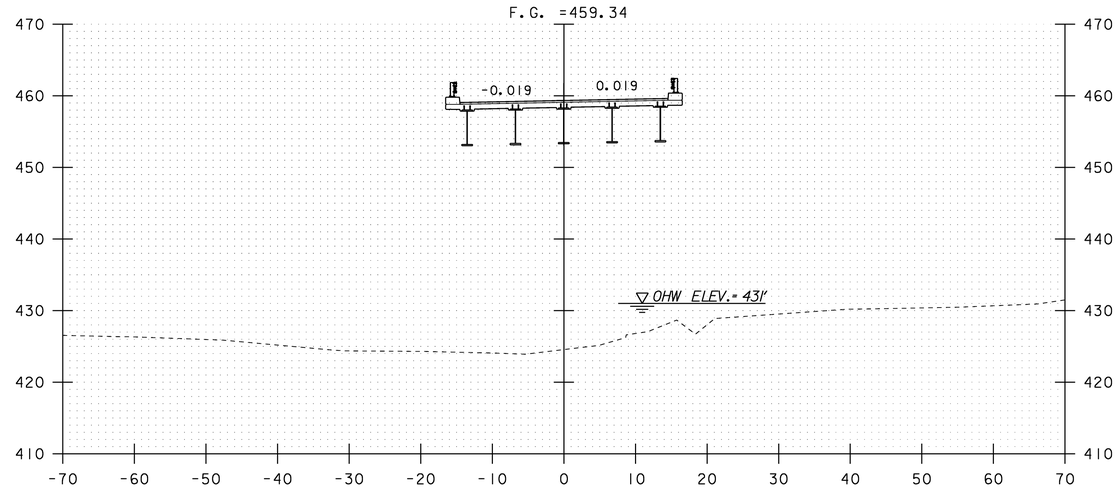

269+50

SCALE 1" = 10'-0
10 0 10

STA. 268+90 TO STA. 270+00

ROADWAY CROSS SECTION SHEET #4

PROJECT NAME: MORETOWN-MIDDLESEX
PROJECT NUMBER: BRS 0284(14)

FILE NAME: 78f219/str/s78f219xs3.dgn
PROJECT LEADER: M. Evans-Mongeon
DESIGNED BY: S. SCRIBNER
IPARM: s7f219xsl.I

PLOT DATE: 15-JUN-2009
DRAWN BY: L. DUQUETTE
CHECKED BY: S. SCRIBNER
SHEET 85 OF 103

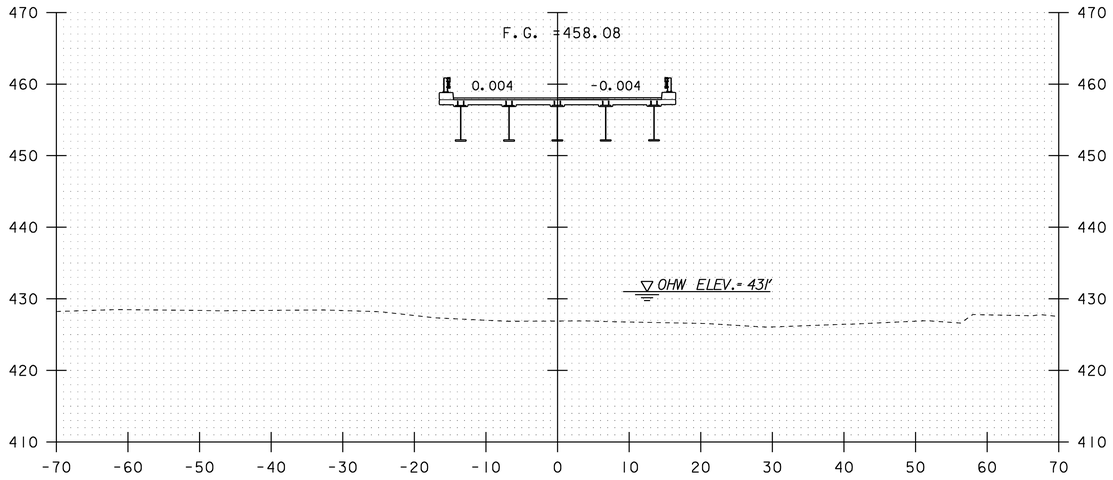

270+50

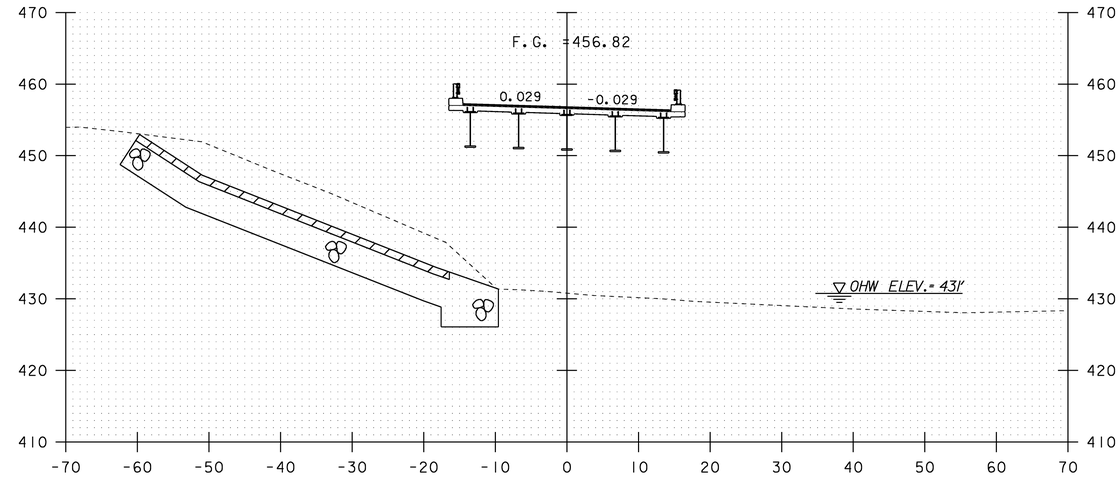

271+50

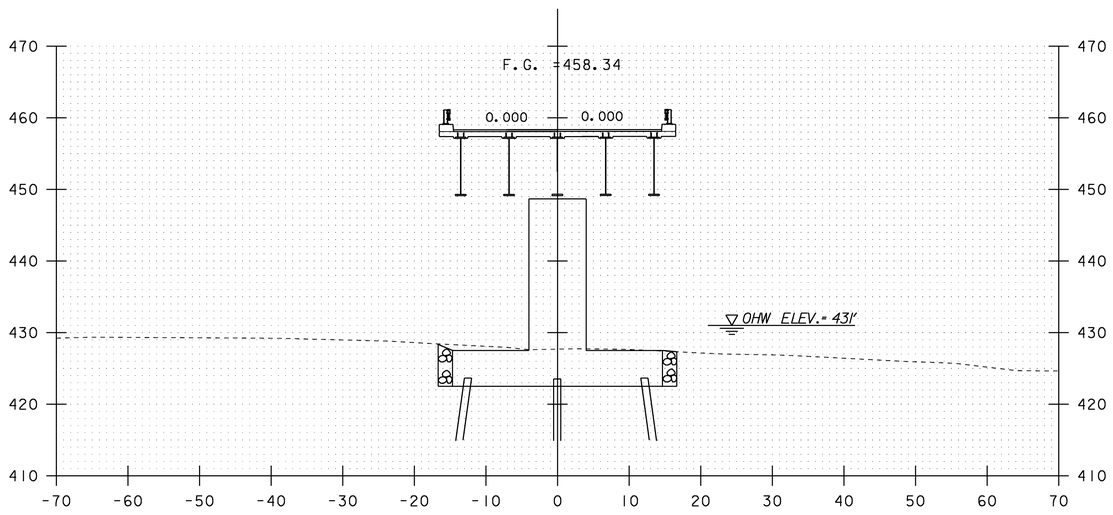

270+30

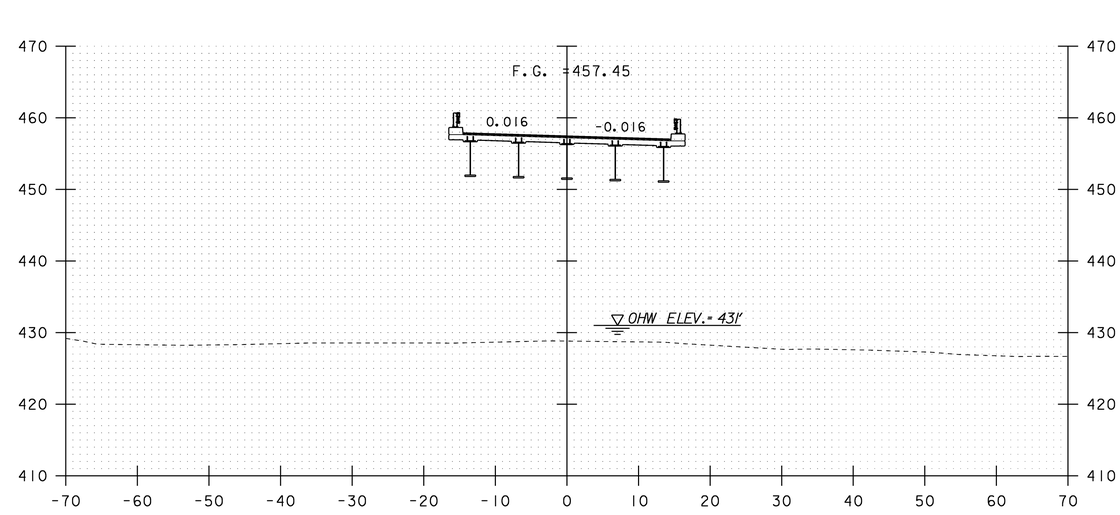

271+00

STA. 270+30 TO STA. 271+50

SCALE 1" = 10'-0
10 0 10

ROADWAY CROSS SECTION SHEET #5

PROJECT NAME: MORETOWN-MIDDLESEX
PROJECT NUMBER: BRS 0284(14)

FILE NAME: 78f219/str/s78f219xs3.dgn
PROJECT LEADER: M. Evans-Mongeon
DESIGNED BY: S. SCRIBNER
IPARM: s7f219xsl.I

PLOT DATE: 15-JUN-2009
DRAWN BY: L. DUQUETTE
CHECKED BY: S. SCRIBNER
SHEET 86 OF 103

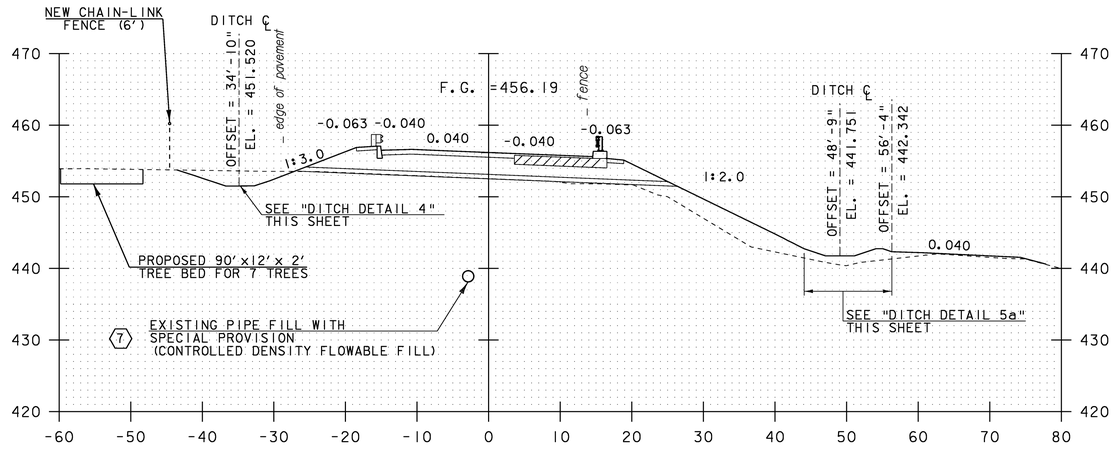

272+00
END BRIDGE 271+72.74

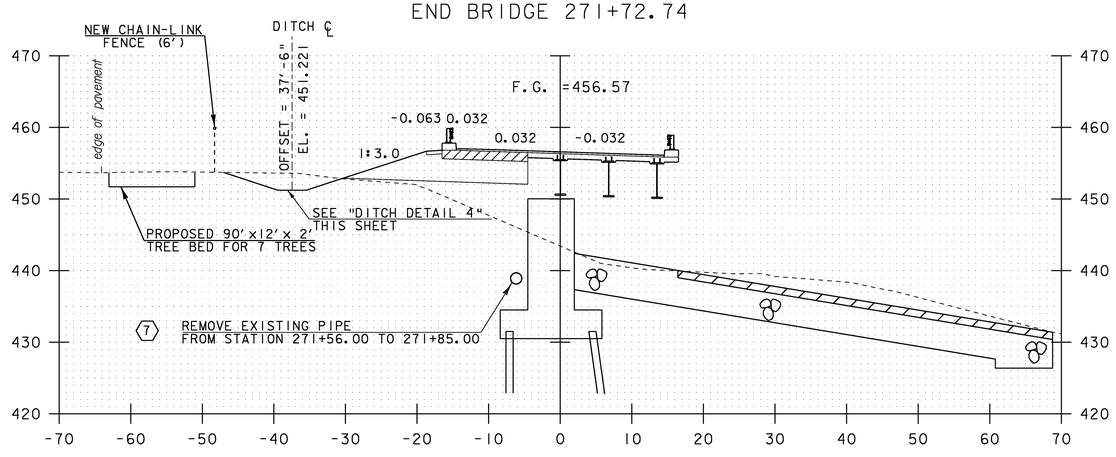

271+70

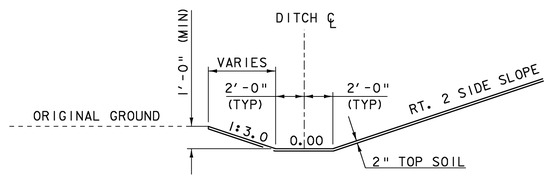

DITCH DETAIL 4 NTS
STA. 271+66.09 LT TO 272+47.00 LT

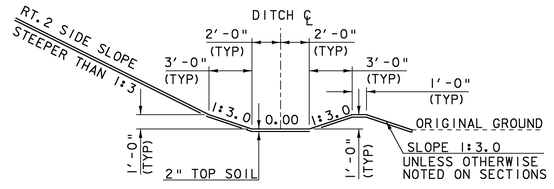

DITCH DETAIL 5a NTS
STA. 271+80.00 RT TO 272+48.00 RT

272+50

NOTE: DITCH OFFSET IS MEASURED FROM THE ROADWAY CENTERLINE TO CENTER OF DITCH

SCALE 1" = 10'-0
10 0 10

STA. 271+70 TO STA. 272+50

ROADWAY CROSS SECTION SHEET #6

PROJECT NAME:	MORETOWN-MIDDLESEX
PROJECT NUMBER:	BRS 0284(14)
FILE NAME: 78f219/str/s78f219xs3.dgn	PLOT DATE: 15-JUN-2009
PROJECT LEADER: M. Evans-Mongeon	DRAWN BY: L. DUQUETTE
DESIGNED BY: S. SCRIBNER	CHECKED BY: S. SCRIBNER
IPARM: s7f219xsl.i	SHEET 87 OF 103

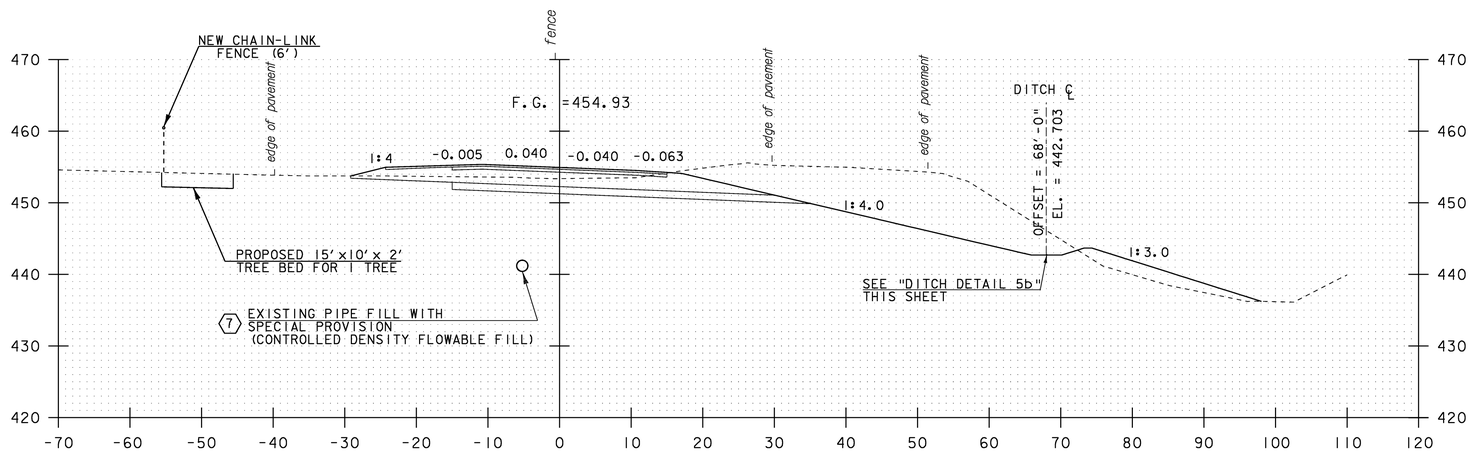

273+00

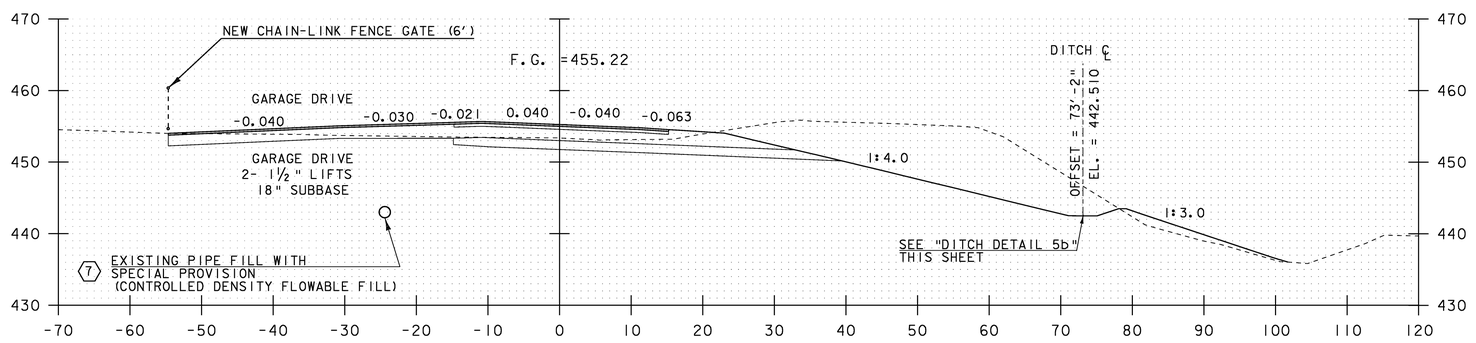

272+77

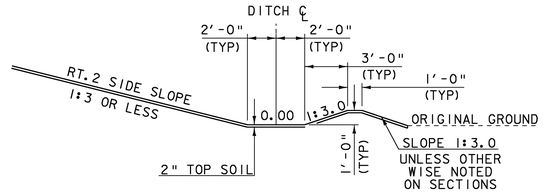

DITCH DETAIL 5b NTS

STA. 272+48.00 RT TO 273+92.00 RT

NOTE: DITCH OFFSET IS MEASURED FROM THE ROADWAY CENTERLINE TO CENTER OF DITCH

SCALE 1" = 10'-0

10 0 10

STA. 272+77 TO STA. 273+00

ROADWAY CROSS SECTION SHEET #7

PROJECT NAME:	MORETOWN-MIDDLESEX
PROJECT NUMBER:	BRS 0284(14)
FILE NAME: 78f219/str/s78f219xs3.dgn	PLOT DATE: 15-JUN-2009
PROJECT LEADER: M. Evans-Mongeon	DRAWN BY: L. DUQUETTE
DESIGNED BY: S. SCRIBNER	CHECKED BY: S. SCRIBNER
IPARM: s7f219xsl.I	SHEET 88 OF 103

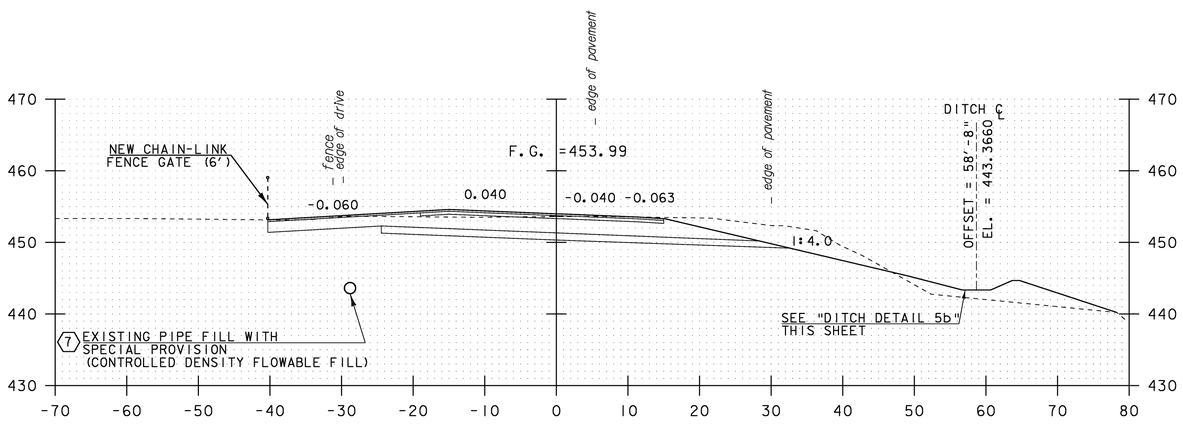

273+75

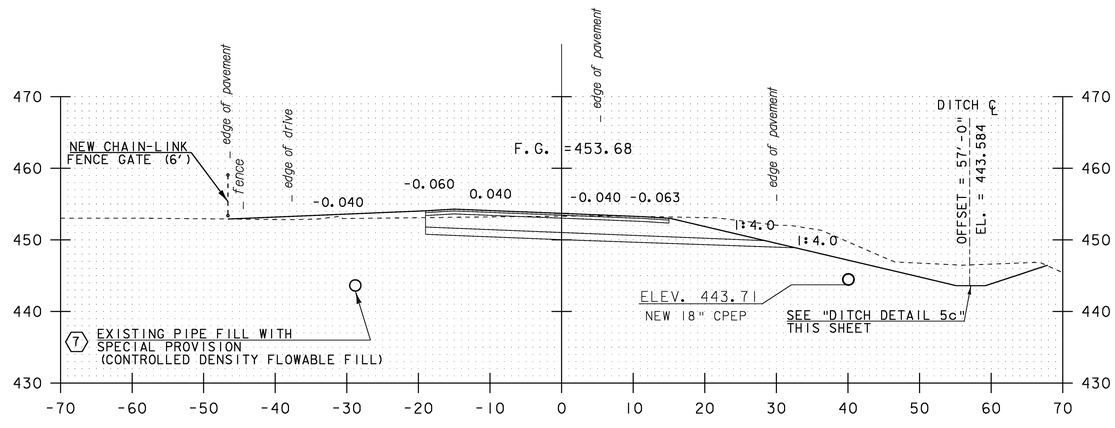

274+00

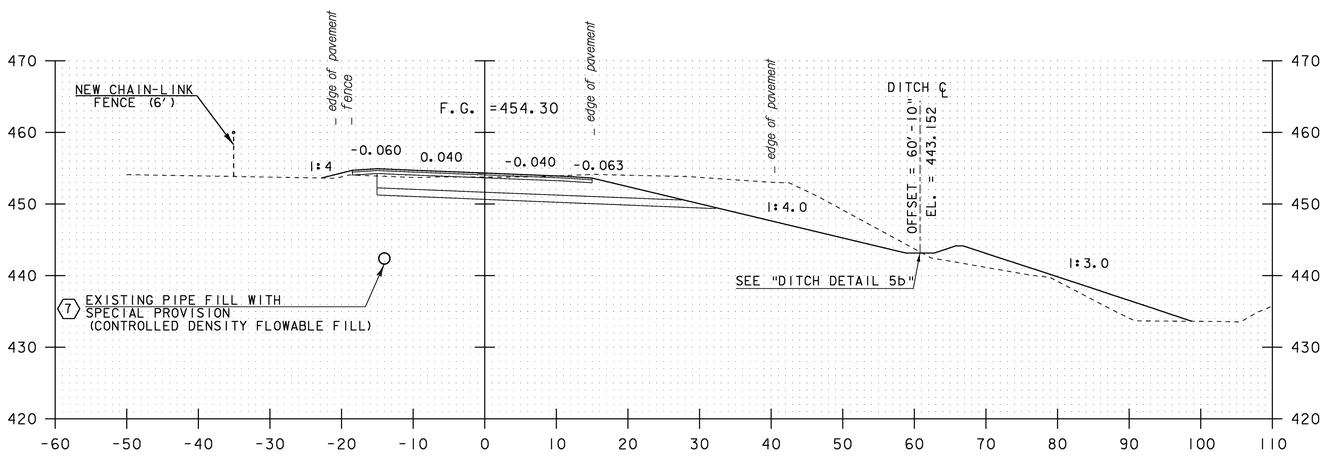

273+50

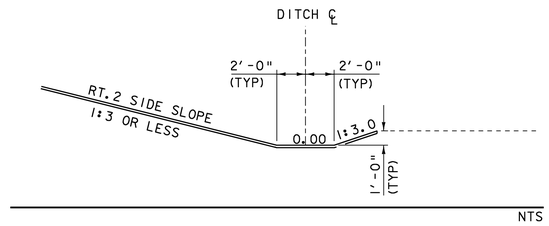

DITCH DETAIL 5c

STA. 273+92.00 RT TO 275+00.00 RT

NOTE: DITCH OFFSET IS MEASURED FROM THE ROADWAY CENTERLINE TO CENTER OF DITCH

SCALE 1" = 10'-0

10 0 10

STA. 273+50 TO STA. 274+00

ROADWAY CROSS SECTION SHEET #8

PROJECT NAME:	MORETOWN-MIDDLESEX
PROJECT NUMBER:	BRS 0284(14)

FILE NAME: 78f219/str/s78f219xs3.dgn	PLOT DATE: 15-JUN-2009
PROJECT LEADER: M. Evans-Mongeon	DRAWN BY: L. DUQUETTE
DESIGNED BY: S. SCRIBNER	CHECKED BY: S. SCRIBNER
IPARM: s7f219xsl.I	SHEET 89 OF 103

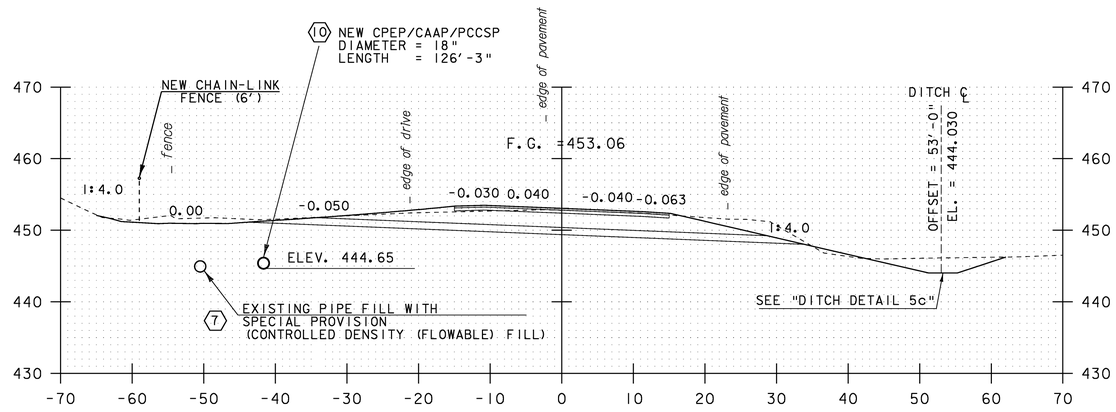

274+50

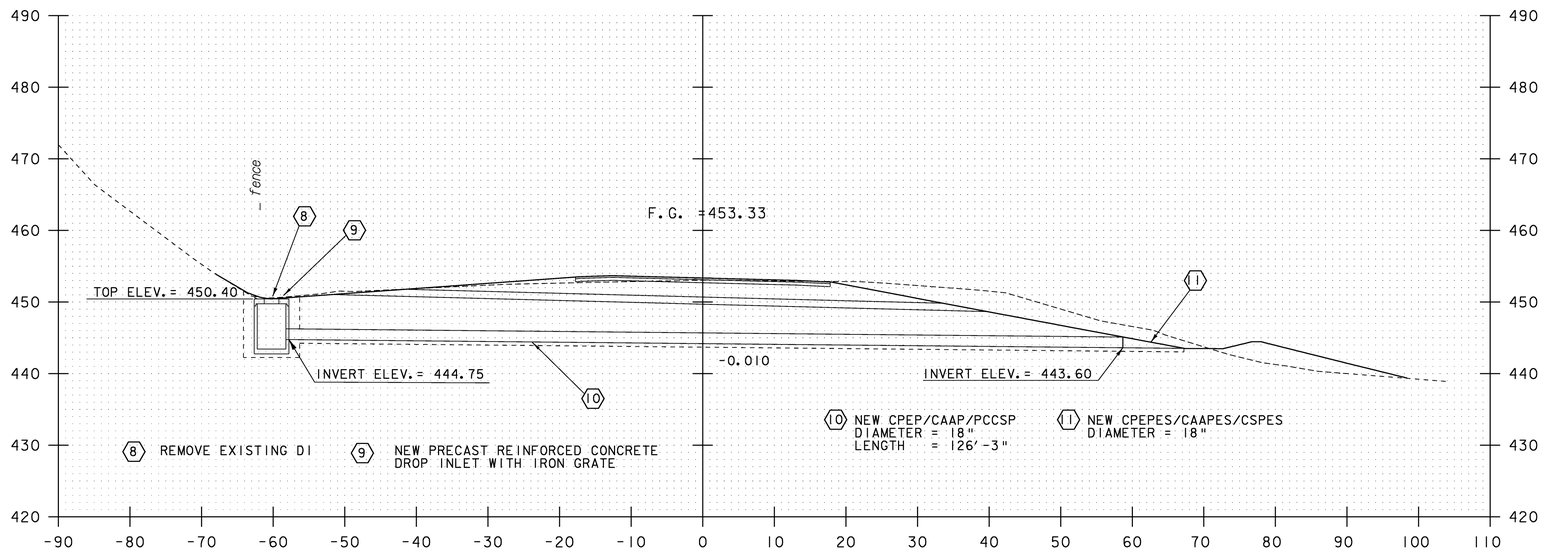

274+27

SKEWED SECTION FOR DI AT STA. 274+55

NOTE: DITCH OFFSET IS MEASURED FROM THE ROADWAY CENTERLINE TO CENTER OF DITCH

SCALE 1" = 10'-0
10 0 10

STA. 274+27 TO STA. 274+50

ROADWAY CROSS SECTION SHEET #9

PROJECT NAME:	MORETOWN-MIDDLESEX
PROJECT NUMBER:	BRS 0284(14)
FILE NAME: 78f219/str/s78f219xs3.dgn	PLOT DATE: 15-JUN-2009
PROJECT LEADER: M. Evans-Mongeon	DRAWN BY: L. DUQUETTE
DESIGNED BY: S. SCRIBNER	CHECKED BY: S. SCRIBNER
IPARM: s7f219xsl.I	SHEET 90 OF 103

NOTE: DITCH OFFSET IS MEASURED FROM THE ROADWAY CENTERLINE TO CENTER OF DITCH

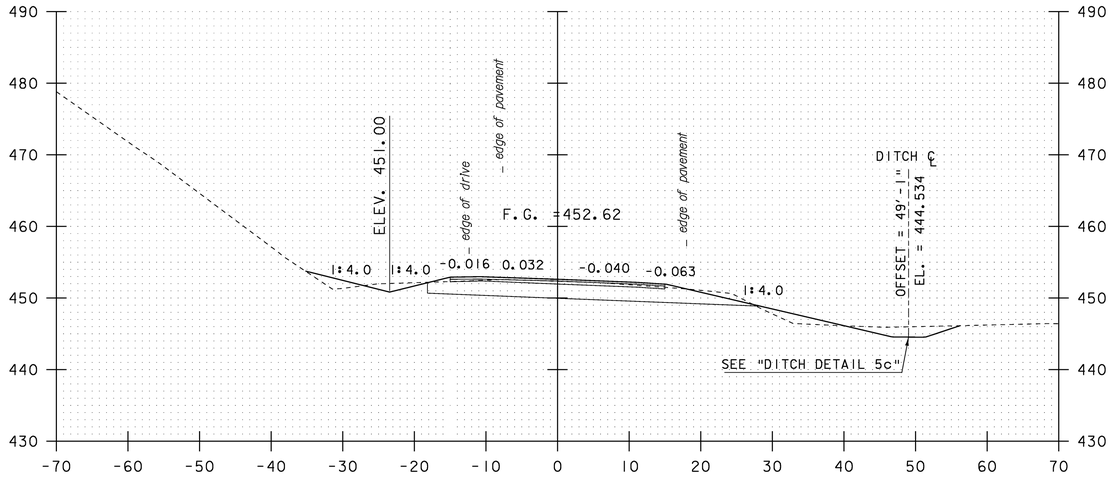

275+00
END PROJECT/BEGIN APPROACH 274+75

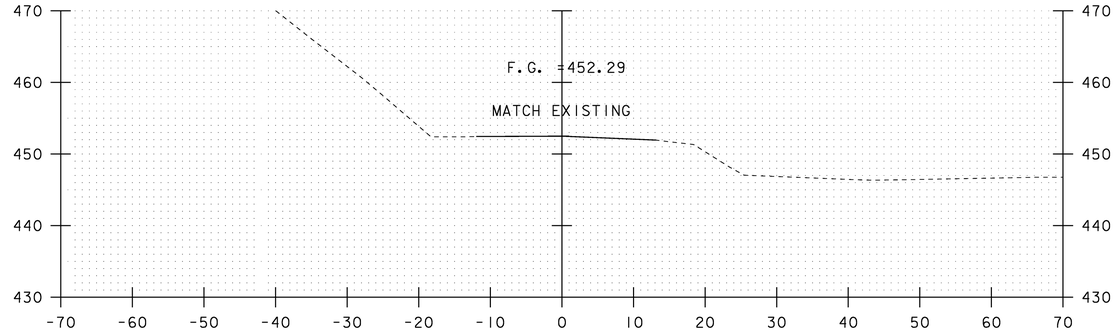

276+00
END APPROACH

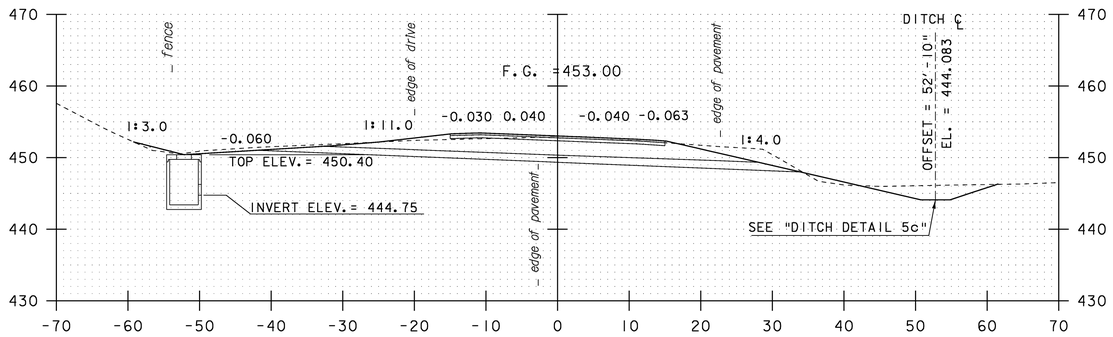

274+55

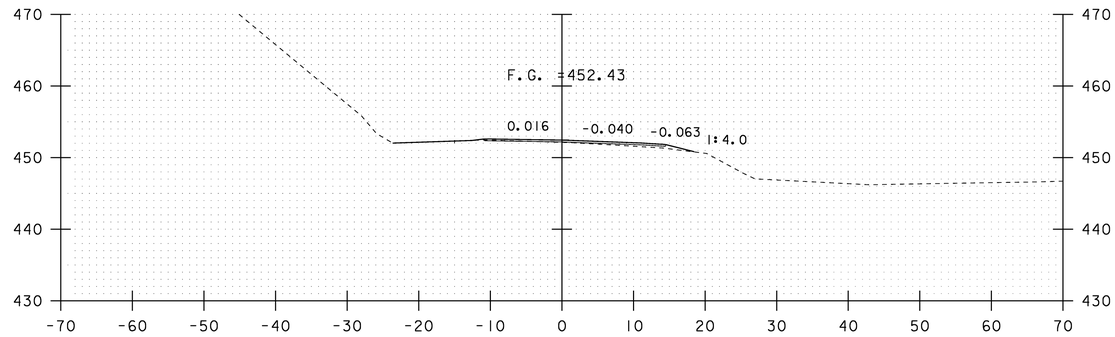

275+50

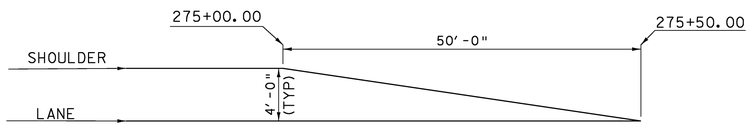

SHOULDER TRANSITION DETAIL 275+00.00 LT
NTS

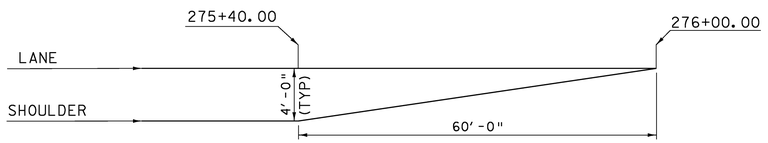

SHOULDER TRANSITION DETAIL 275+40.00 RT
NTS

SCALE 1" = 10'-0
10 0 10

STA. 274+55 TO STA. 276+00

ROADWAY CROSS SECTION SHEET #10

PROJECT NAME:	MORETOWN-MIDDLESEX
PROJECT NUMBER:	BRS 0284(14)

FILE NAME: 78f219/str/s78f219xs3.dgn	PLOT DATE: 15-JUN-2009
PROJECT LEADER: M. Evans-Mongeon	DRAWN BY: L. DUQUETTE
DESIGNED BY: S. SCRIBNER	CHECKED BY: S. SCRIBNER
IPARM: s7f219xsl.1	SHEET 91 OF 103

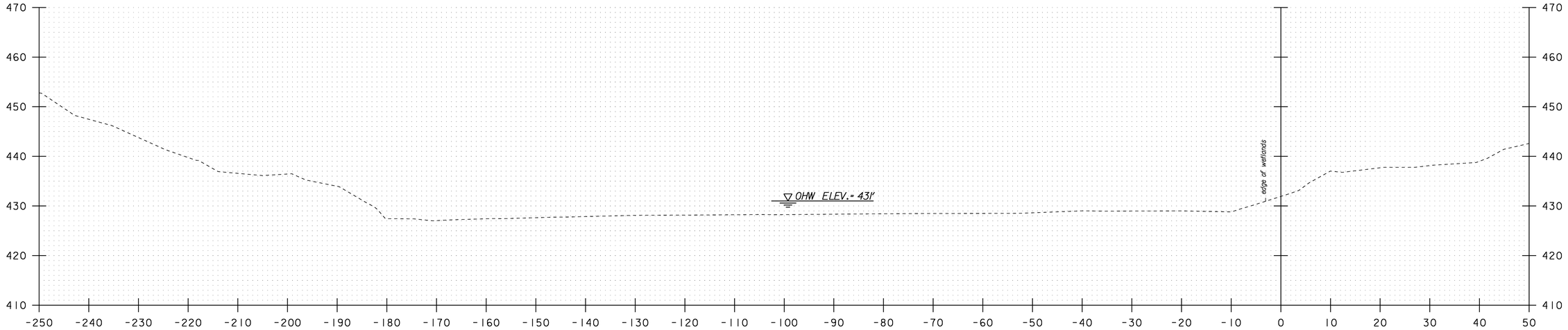

51+75

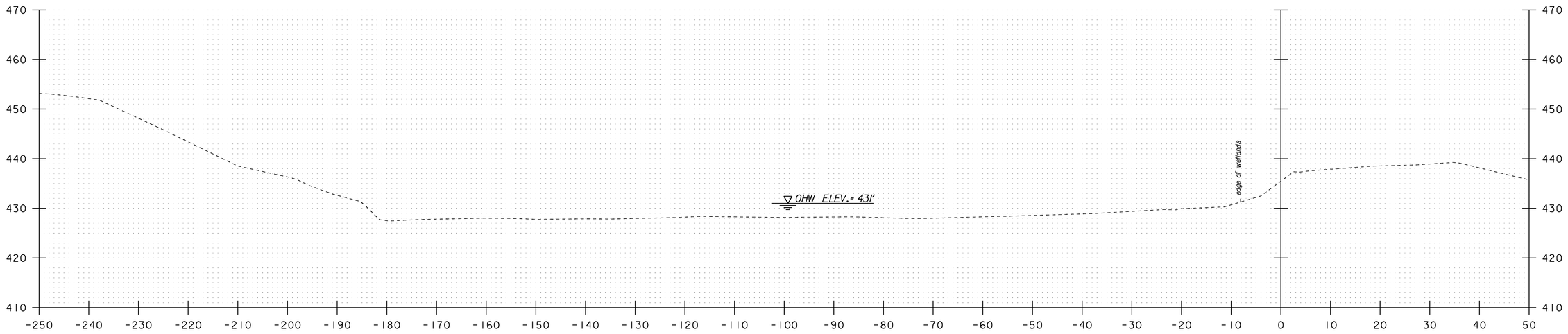

51+50

SCALE 1" = 10'-0

10 0 10

STA. 51+50 TO STA. 51+75

CHANNEL CROSS SECTION SHEET #1

PROJECT NAME: MORETOWN-MIDDLESEX
PROJECT NUMBER: BRS 0284(14)

FILE NAME: 78f219/str/s78f219xs3.dgn
PROJECT LEADER: M. Evans-Mongeon
DESIGNED BY: S. SCRIBNER
IPARM: s78f219chl.i

PLOT DATE: 15-JUN-2009
DRAWN BY: L. DUQUETTE
CHECKED BY: S. SCRIBNER
SHEET 92 OF 103

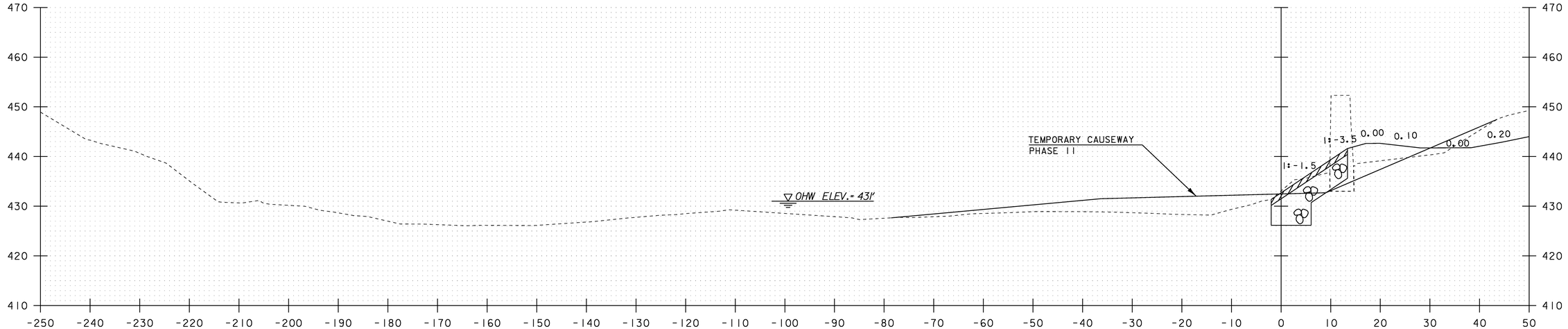

52+25

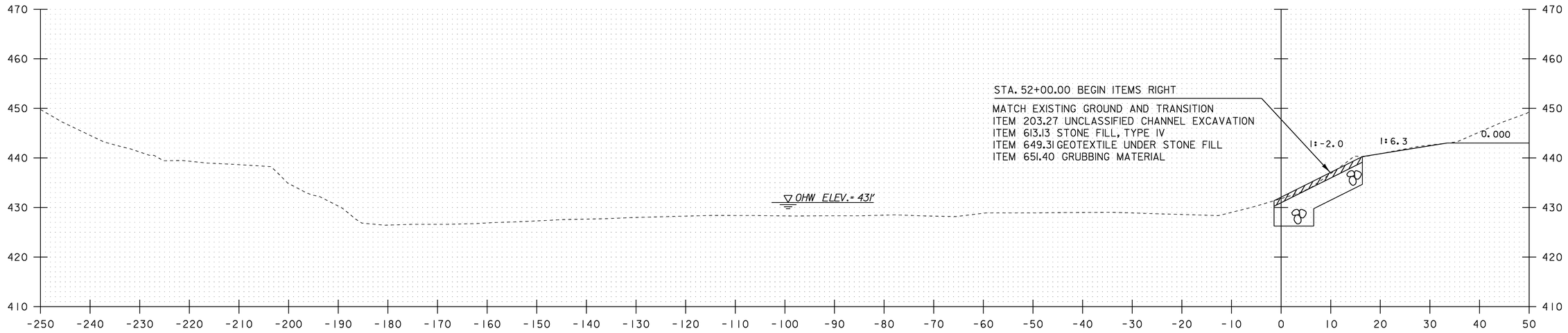

52+00

SCALE 1" = 10'-0
10 0 10

STA. 52+00 TO STA. 52+25

CHANNEL CROSS SECTION SHEET #2

PROJECT NAME:	MORETOWN-MIDDLESEX
PROJECT NUMBER:	BRS 0284(14)

FILE NAME: 78f219/str/s78f219xs3.dgn	PLOT DATE: 15-JUN-2009
PROJECT LEADER: M. Evans-Mongeon	DRAWN BY: L. DUQUETTE
DESIGNED BY: S. SCRIBNER	CHECKED BY: S. SCRIBNER
IPARM: s78f219chl.i	SHEET 93 OF 103

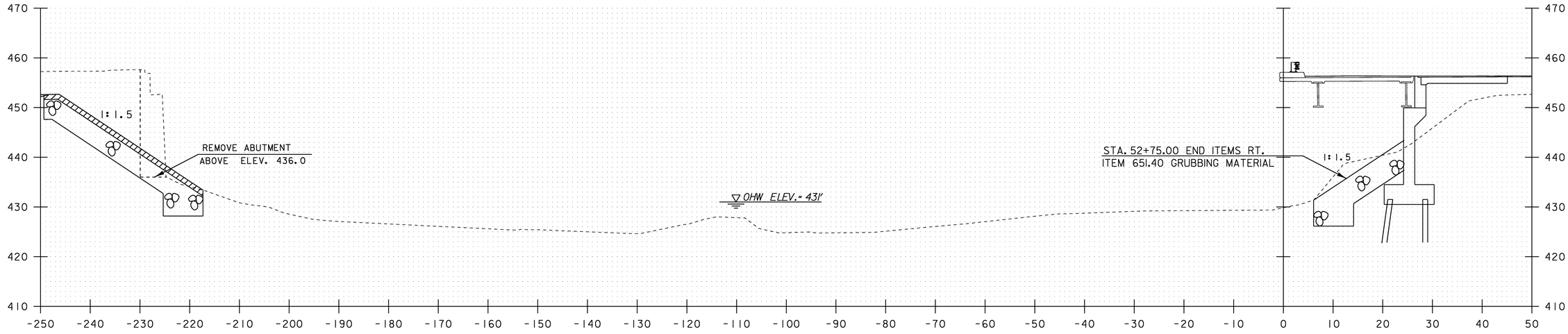

52+75

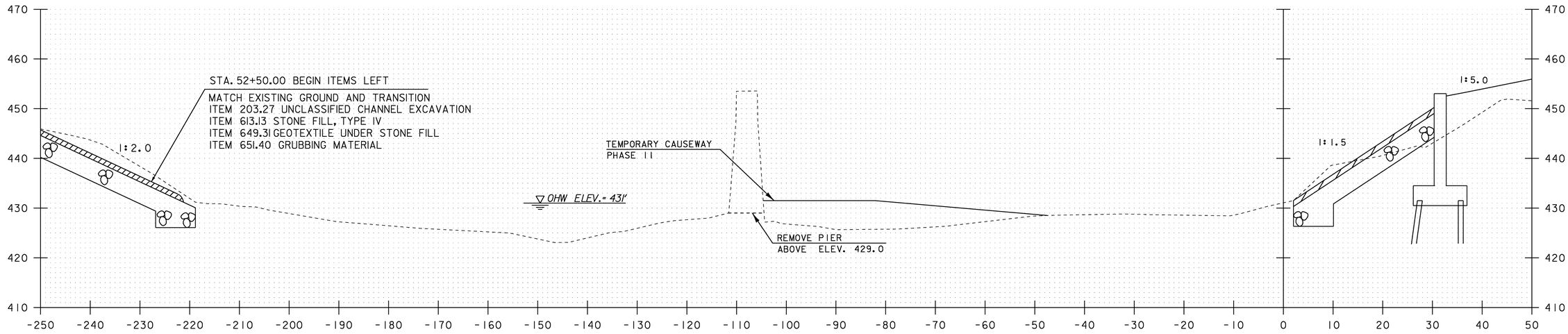

52+50

STA. 52+50 TO STA. 52+75

SCALE 1" = 10'-0

10 0 10

CHANNEL CROSS SECTION SHEET #3

PROJECT NAME:	MORETOWN-MIDDLESEX
PROJECT NUMBER:	BRS 0284(14)

FILE NAME: 78f219/str/s78f219xs3.dgn	PLOT DATE: 15-JUN-2009
PROJECT LEADER: M. Evans-Mongeon	DRAWN BY: L. DUQUETTE
DESIGNED BY: S. SCRIBNER	CHECKED BY: S. SCRIBNER
IPARM: s78f219chl.i	SHEET 94 OF 103

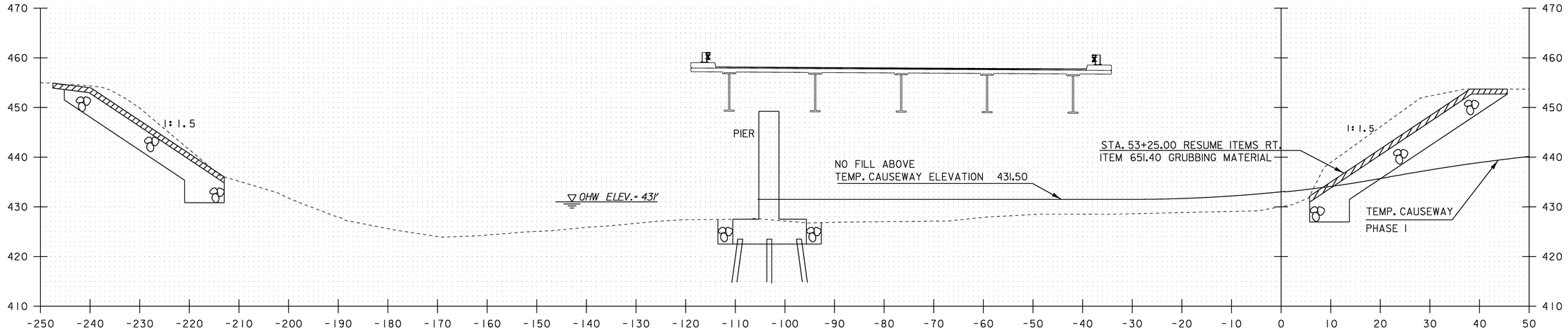

53+25

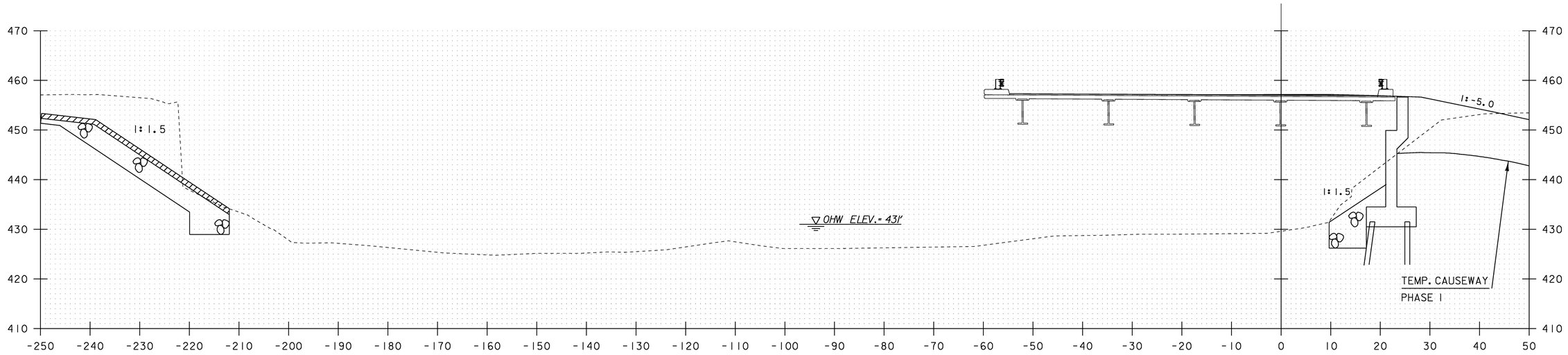

53+00

SCALE 1" = 10'-0

10 0 10

STA. 53+00 TO STA. 53+25

CHANNEL CROSS SECTION SHEET #4

PROJECT NAME:	MORETOWN-MIDDLESEX
PROJECT NUMBER:	BRS 0284(14)

FILE NAME: 78f219/str/s78f219xs3.dgn	PLOT DATE: 15-JUN-2009
PROJECT LEADER: M. Evans-Mongeon	DRAWN BY: L. DUQUETTE
DESIGNED BY: S. SCRIBNER	CHECKED BY: S. SCRIBNER
IPARM: s78f219chl.i	SHEET 95 OF 103

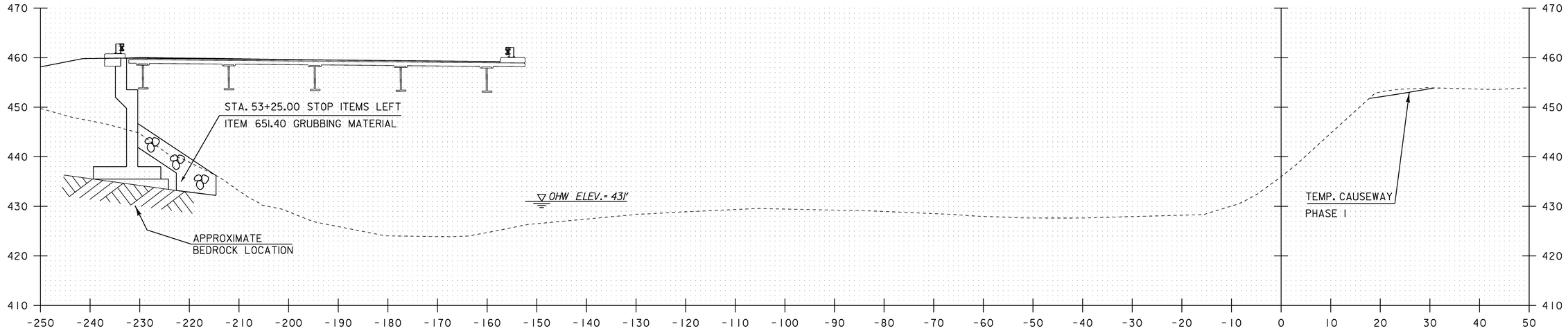

53+75

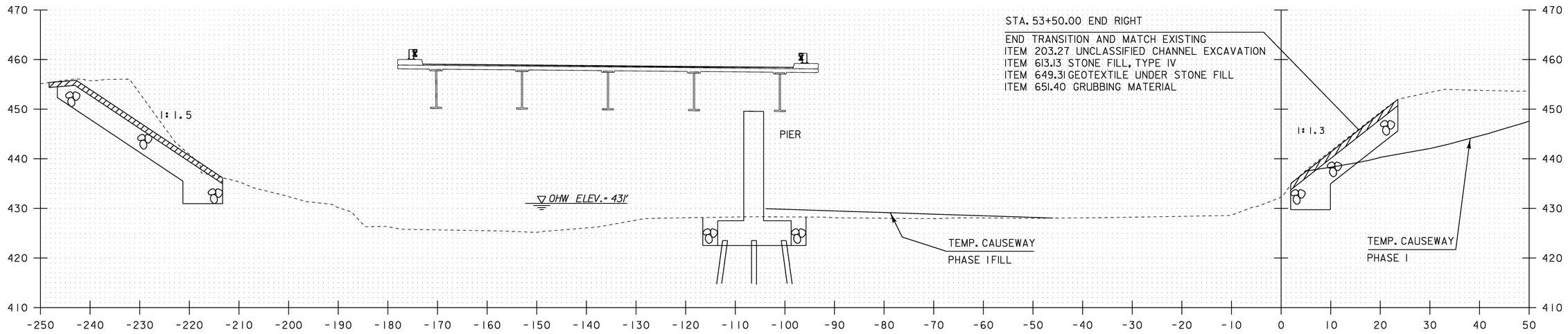

53+50

CHANNEL CROSS SECTION SHEET #5

SCALE 1" = 10'-0
10 0 10

STA. 53+50 TO STA. 53+75

PROJECT NAME:	MORETOWN-MIDDLESEX
PROJECT NUMBER:	BRS 0284(14)
FILE NAME: 78f219/str/s78f219xs3.dgn	PLOT DATE: 15-JUN-2009
PROJECT LEADER: M. Evans-Mongeon	DRAWN BY: L. DUQUETTE
DESIGNED BY: S. SCRIBNER	CHECKED BY: S. SCRIBNER
IPARM: s78f219chl.i	SHEET 96 OF 103

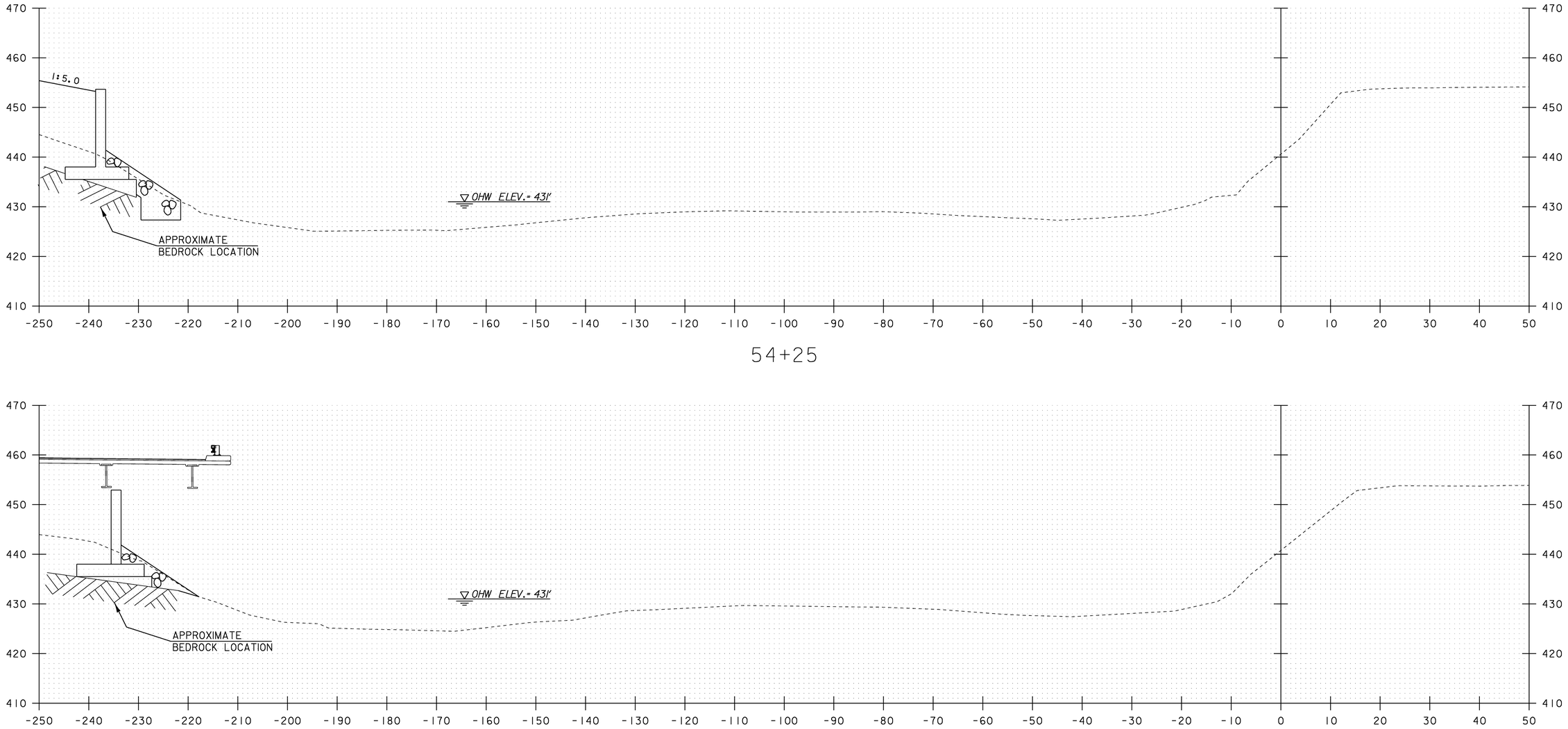

54+25

54+00

SCALE 1" = 10'-0

10 0 10

STA. 54+00 TO STA. 54+25

CHANNEL CROSS SECTION SHEET #6

PROJECT NAME:	MORETOWN-MIDDLESEX
PROJECT NUMBER:	BRS 0284(14)

FILE NAME: 78f219/str/s78f219xs3.dgn	PLOT DATE: 15-JUN-2009
PROJECT LEADER: M. Evans-Mongeon	DRAWN BY: L. DUQUETTE
DESIGNED BY: S. SCRIBNER	CHECKED BY: S. SCRIBNER
IPARM: s78f219chl.i	SHEET 97 OF 103

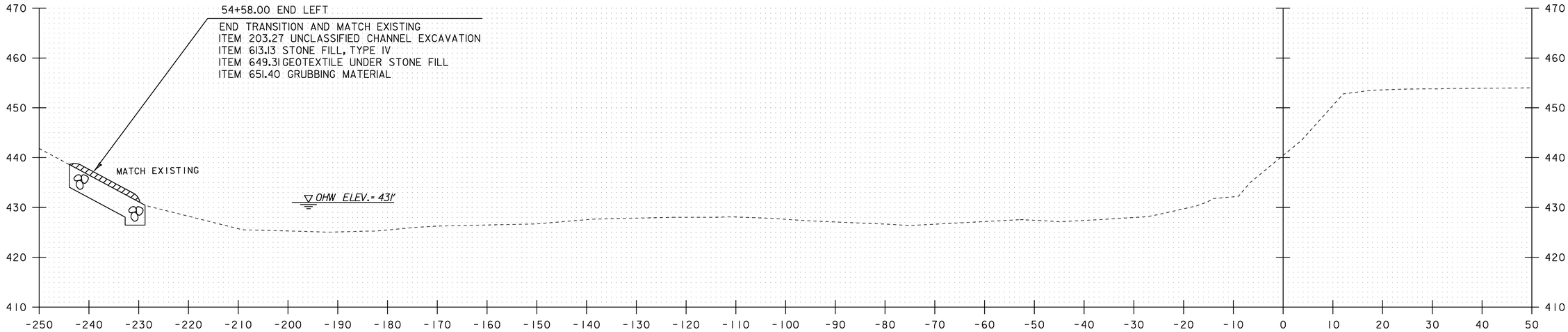

54+59

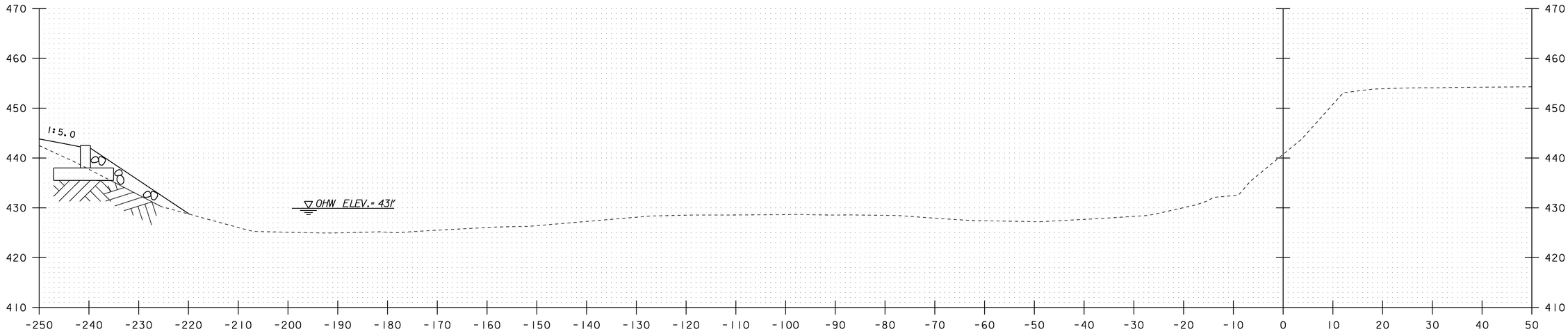

54+50

SCALE 1" = 10'-0
10 0 10

STA. 54+50 TO STA. 54+59

CHANNEL CROSS SECTION SHEET #7

PROJECT NAME:	MORETOWN-MIDDLESEX
PROJECT NUMBER:	BRS 0284(14)

FILE NAME: 78f219/str/s78f219xs3.dgn	PLOT DATE: 15-JUN-2009
PROJECT LEADER: M. Evans-Mongeon	DRAWN BY: L. DUQUETTE
DESIGNED BY: S. SCRIBNER	CHECKED BY: S. SCRIBNER
IPARM: s78f219chl.i	SHEET 98 OF 103

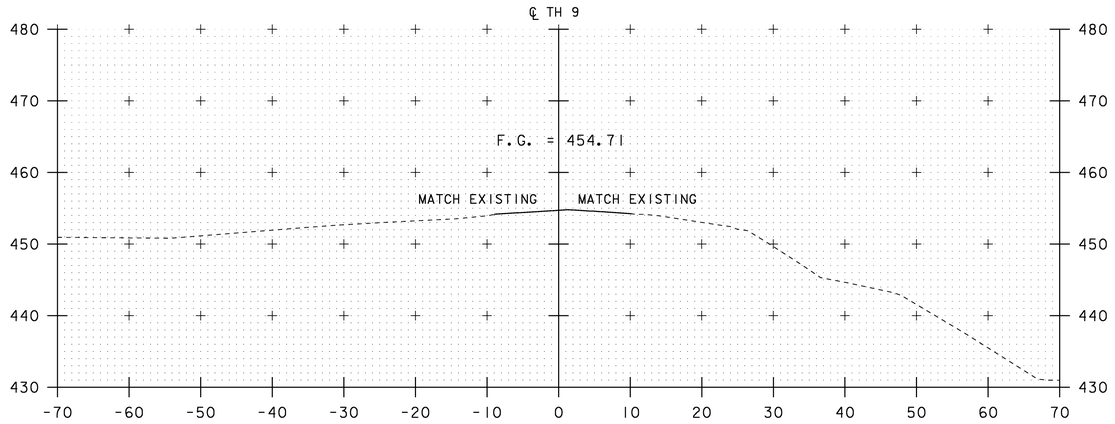

103+17

BEGIN TH#9 CONSTRUCTION STA. 103+16.75

103+00

NOTE: DITCH OFFSET IS MEASURED FROM THE CENTERLINE OF TH 9 TO CENTER OF DITCH

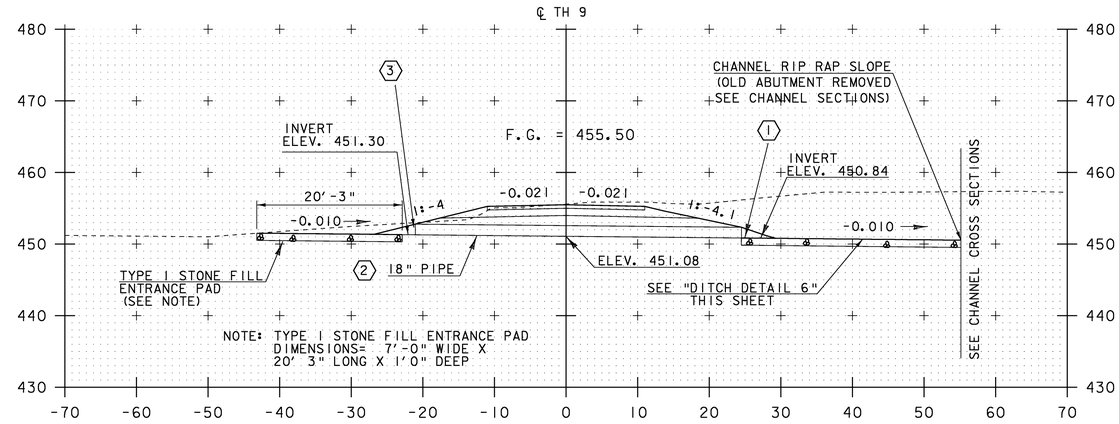

NOTE: TYPE I STONE FILL ENTRANCE PAD
DIMENSIONS= 7'-0" WIDE X
20' 3" LONG X 1'0" DEEP

103+50

103+25

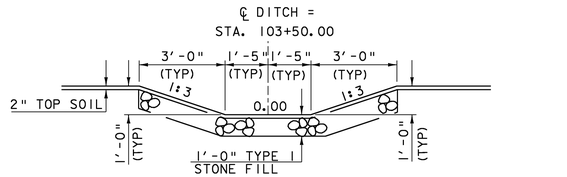

DITCH DETAIL 6

NTS

STA. 103+50.00 ~ 29.22'RT
TO STA. 103+50.00 ~ 55.10' RT

SCALE 1" = 10'-0
10 0 10

STA. 103+17 TO STA. 103+50

TH 9 CROSS SECTION SHEET #1

PROJECT NAME:	MORETOWN-MIDDLESEX
PROJECT NUMBER:	BRS 0284(14)
FILE NAME: 78f219/str/s78f219xs3.dgn	PLOT DATE: 15-JUN-2009
PROJECT LEADER: M. Evans-Mongeon	DRAWN BY: G. ROKES
DESIGNED BY: G. ROKES	CHECKED BY: S. SCRIBNER
IPARM: s78f2191lxsl.1	SHEET 99 OF 103

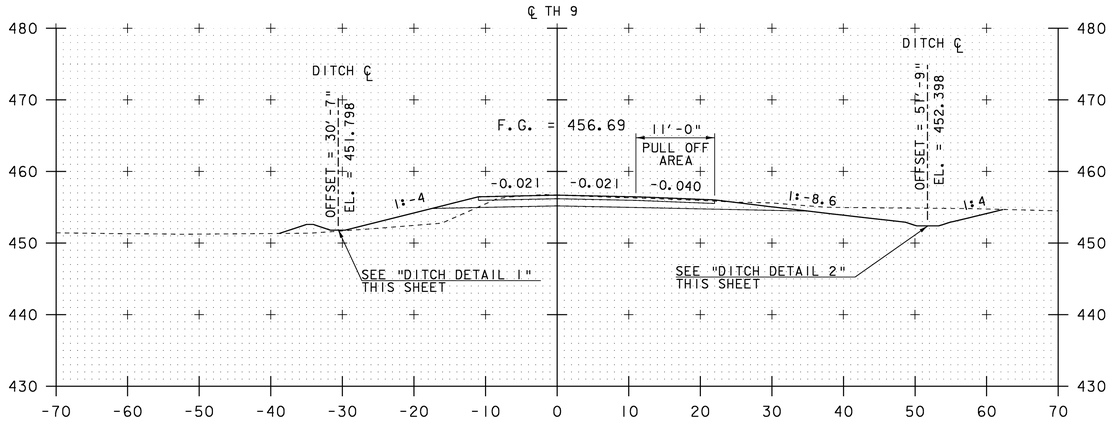

104+00

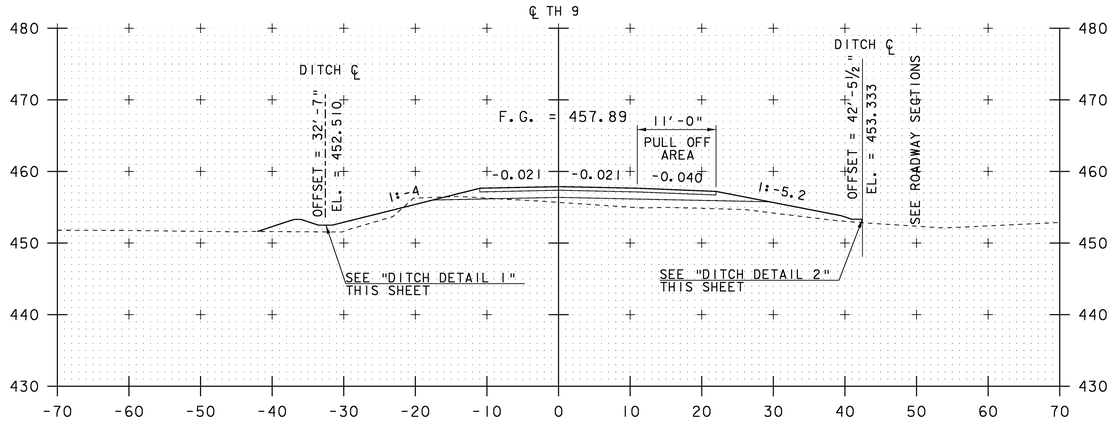

104+50

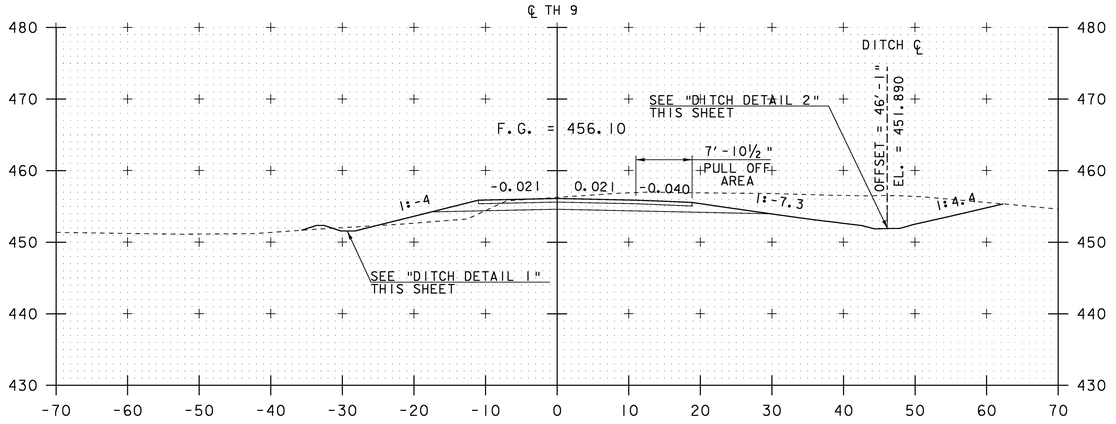

103+75

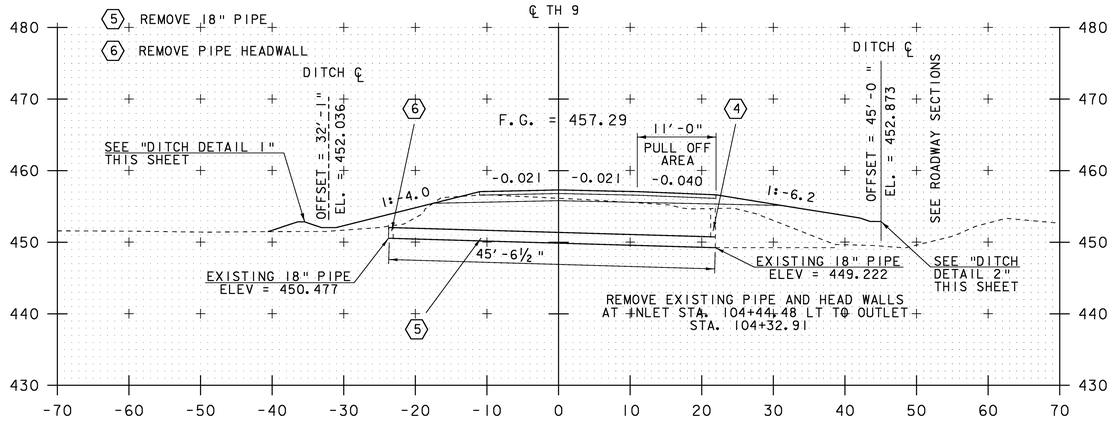

104+25

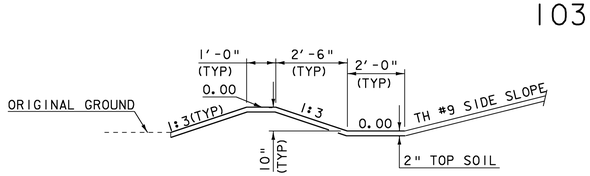

DITCH DETAIL 1

NTS

STA. 103+56.00 LT TO 106+21.03 LT

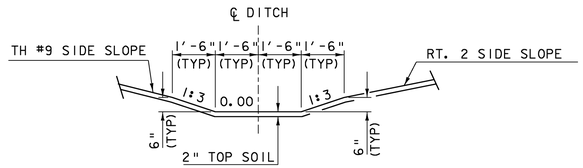

DITCH DETAIL 2

NTS

STA. 103+50.00 RT TO 105+65.31 RT

NOTE: DITCH OFFSET IS MEASURED FROM THE CENTERLINE OF TH 9 TO CENTER OF DITCH

SCALE 1" = 10'-0

STA. 103+75 TO STA. 104+50

TH 9 CROSS SECTION SHEET #2

PROJECT NAME:	MORETOWN-MIDDLESEX
PROJECT NUMBER:	BRS 0284(14)
FILE NAME: 78f219/str/s78f219xs3.dgn	PLOT DATE: 15-JUN-2009
PROJECT LEADER: M. Evans-Mongeon	DRAWN BY: G. ROKES
DESIGNED BY: G. ROKES	CHECKED BY: S. SCRIBNER
IPARM: s78f2191lxsl.1	SHEET 100 OF 103

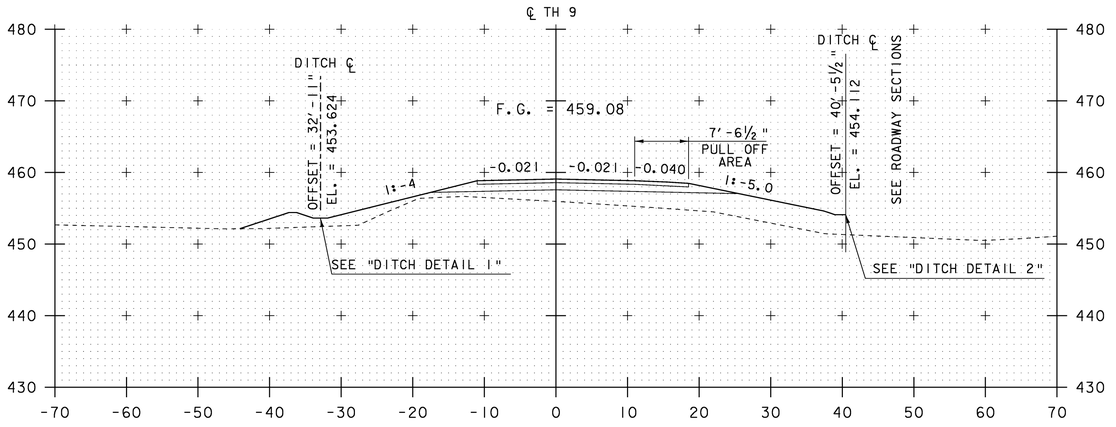

105+00

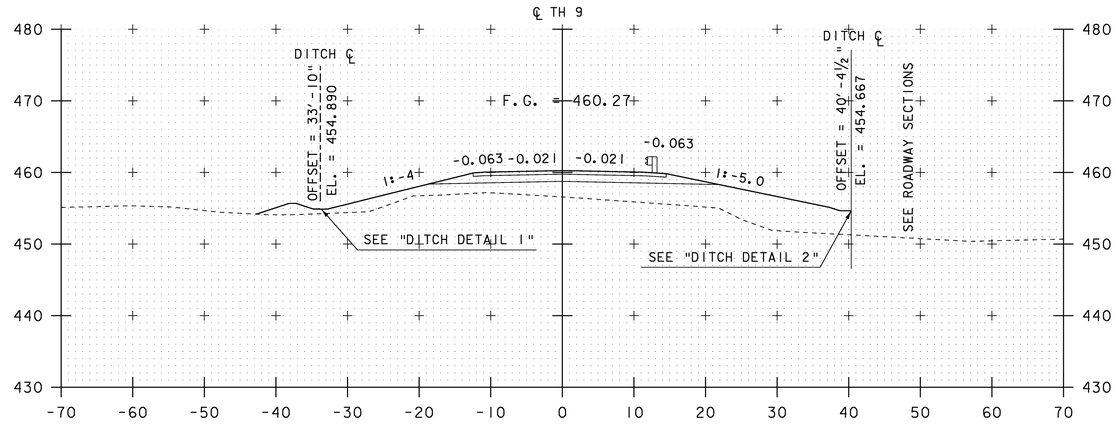

105+50

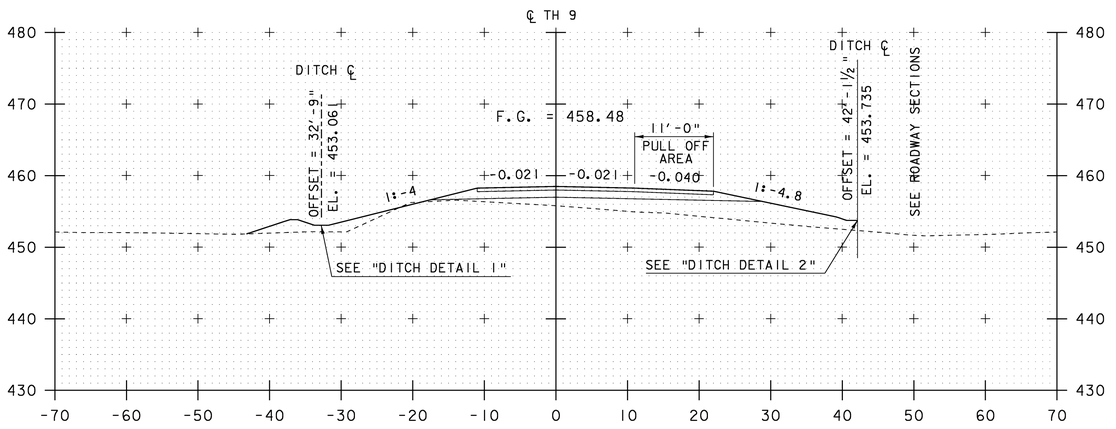

104+75

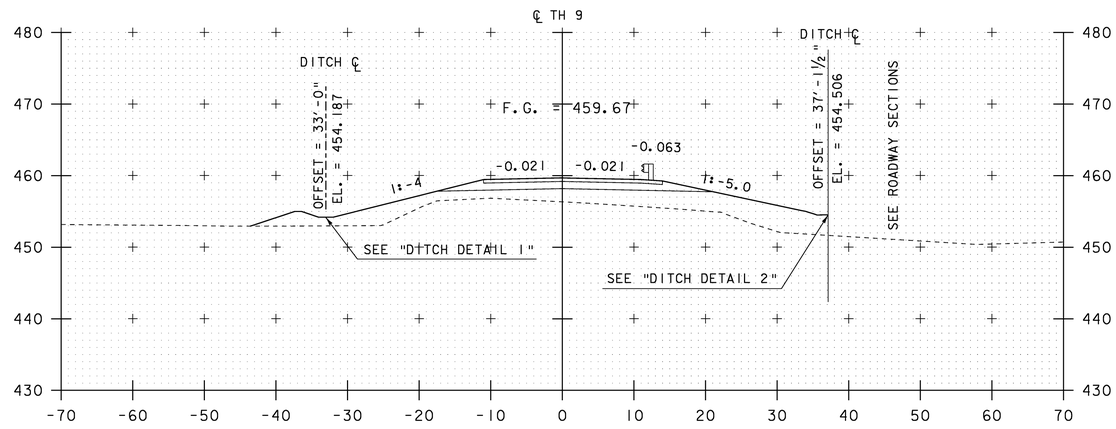

105+25

NOTE: DITCH OFFSET IS MEASURED FROM THE CENTERLINE OF TH 9 TO CENTER OF DITCH

SCALE 1" = 10'-0
10 0 10

STA. 104+75 TO STA. 105+50

TH 9 CROSS SECTION SHEET #3

PROJECT NAME:	MORETOWN-MIDDLESEX
PROJECT NUMBER:	BRS 0284(14)
FILE NAME: 78f219/str/s78f219xs3.dgn	PLOT DATE: 15-JUN-2009
PROJECT LEADER: M. Evans-Mongeon	DRAWN BY: G. ROKES
DESIGNED BY: G. ROKES	CHECKED BY: S. SCRIBNER
IPARM: s78f2191xsl.1	SHEET 101 OF 103

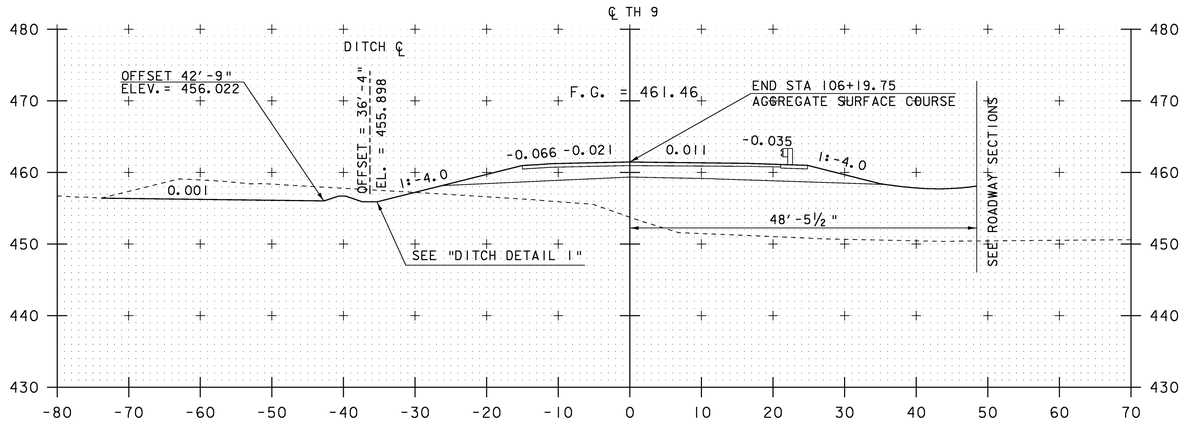

106+00

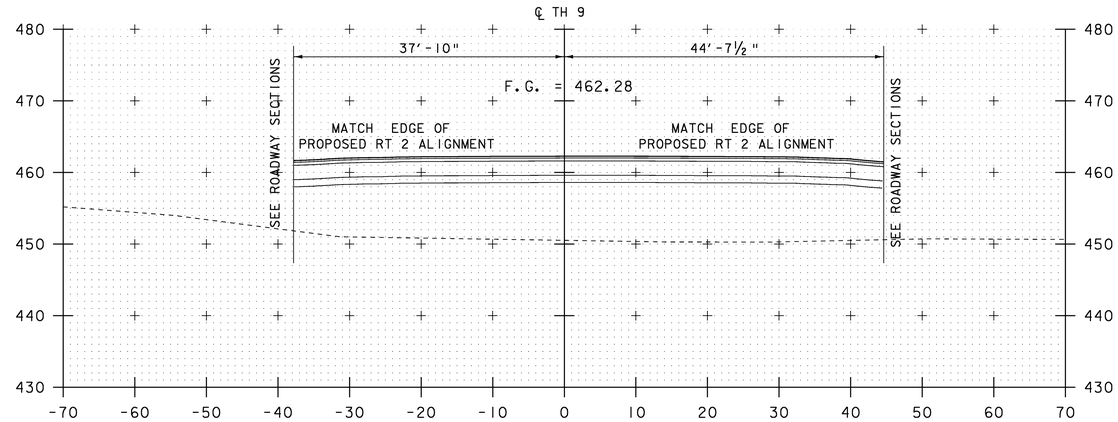

106+34

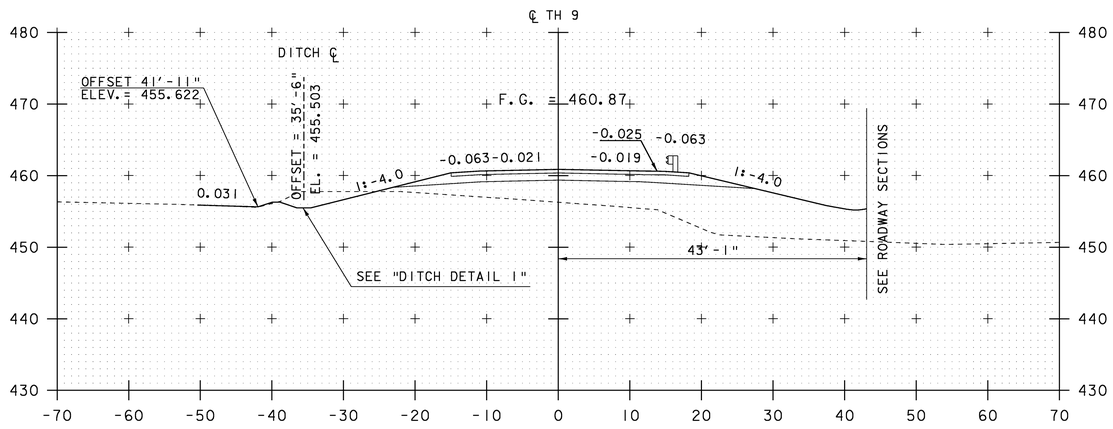

105+75

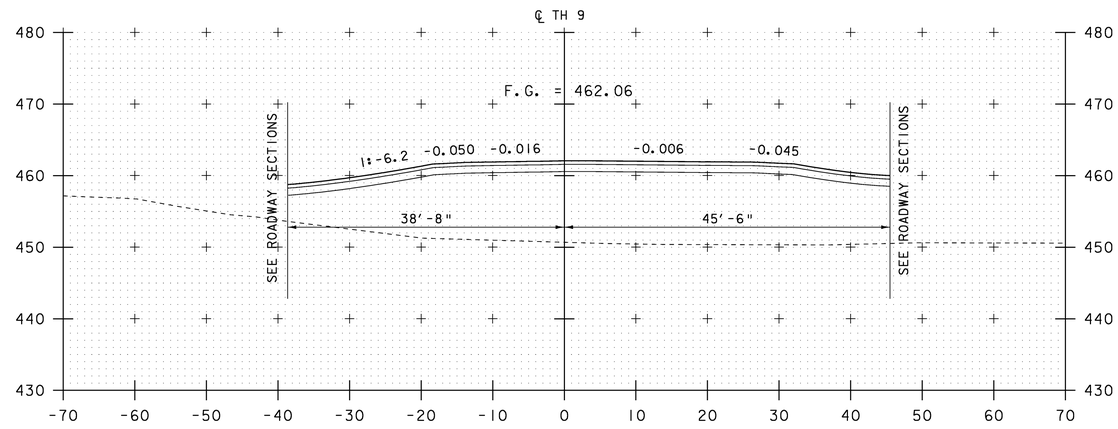

106+25

NOTE: DITCH OFFSET IS MEASURED FROM THE CENTERLINE OF TH 9 TO CENTER OF DITCH

SCALE 1" = 10'-0
10 0 10

STA. 105+75 TO STA. 106+34

TH 9 CROSS SECTION SHEET #4

PROJECT NAME:	MORETOWN-MIDDLESEX
PROJECT NUMBER:	BRS 0284(14)
FILE NAME: 78f219/str/s78f219xs3.dgn	PLOT DATE: 15-JUN-2009
PROJECT LEADER: M. Evans-Mongeon	DRAWN BY: G. ROKES
DESIGNED BY: G. ROKES	CHECKED BY: S. SCRIBNER
IPARM: s78f2191lxsl.1	SHEET 102 OF 103

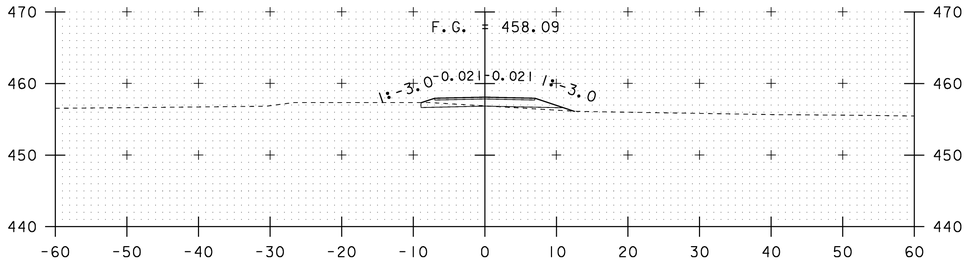

67+25

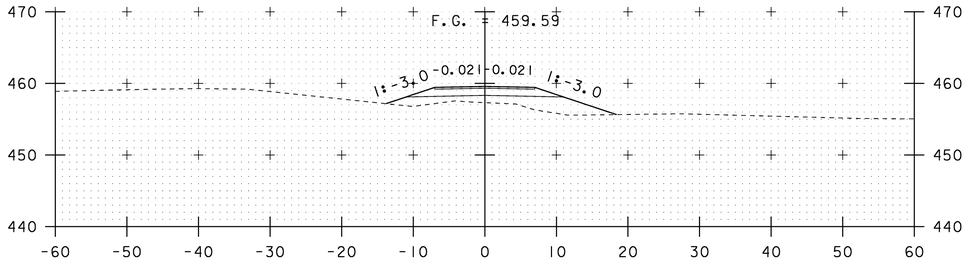

67+00

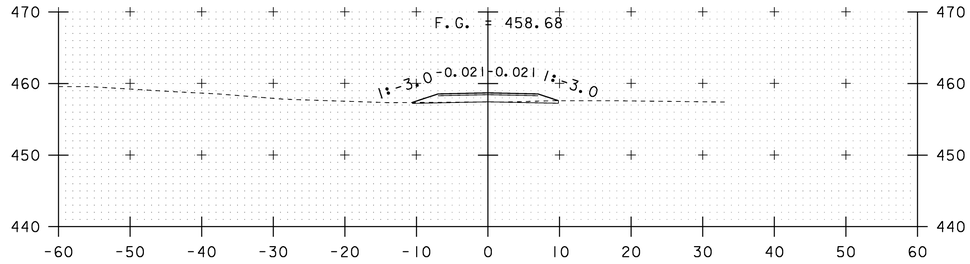

67+75

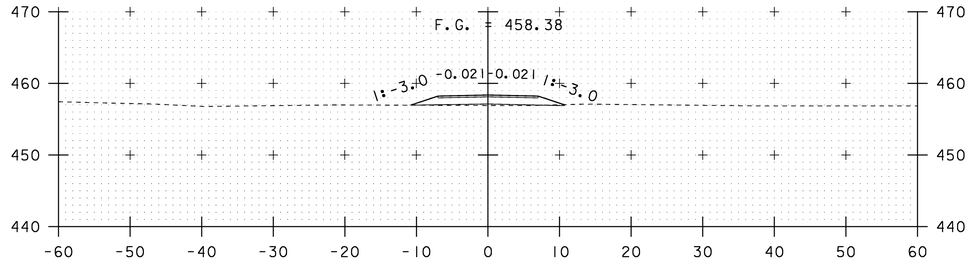

67+50

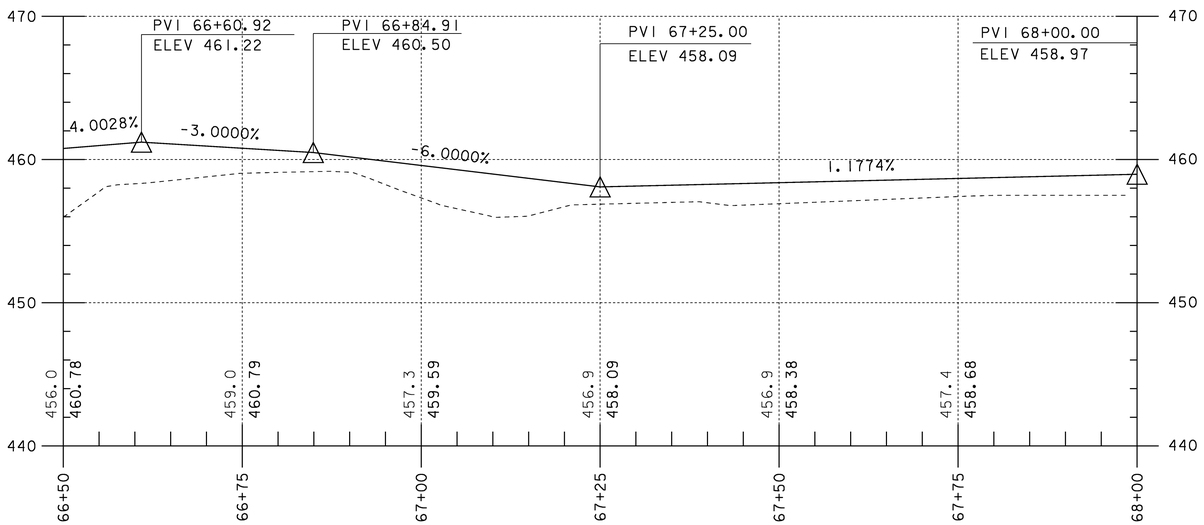

DRIVE 265+34 PROFILE

SCALE 1" = 10'-0
10 0 10

DRIVE SECTIONS 265+34.00 RT

PROJECT NAME: MORETOWN-MIDDLESEX
PROJECT NUMBER: BRS 0284(14)

FILE NAME: 78f219/str/s78f219xs3.dgn
PROJECT LEADER: M. Evans-Mongeon
DESIGNED BY: G. ROKES
PLOT DATE: 15-JUN-2009
DRAWN BY: L. DUQUETTE
CHECKED BY: M. EVANS-MONGEO
SHEET 103 OF 103

Casco Bay Steel Structures, Inc.
75 Spring Hill Road
Saco, Maine 04072
Phone: (207) 282-7360
Fax: (207) 282-1179

WELDING PROCEDURE SPECIFICATION

Material specification ASTM-A709/A709M - Gr50 (345) - Gr50W (345W)
Welding process Submerged Arc welding (SAW)
Manual or machine Machine
Position of welding Horizontal (2F)
Filler metal specification AWS A5-23
Filler metal classification F8A2-ENi1K-Nil Lincoln
Flux Lincoln 960 FLUX with LA75 Elec.
Shielding gas ~A Flow rate
Single or multiple pass Single
Single or multiple arc Single
Welding current DC
Polarity DCEP
Welding progression See Joint Detail
Root treatment WIRE Brush - area To be Free of Loose Scale - Slag - Rust & Moisture
Preheat and interpass temperature To 3/4 (19) 50°F (10°C) - 3/4 (19) To 1 1/2 (38) 70° (20°C) 1 1/2 (38) To 2 1/2 (63) 150° (6
Postheat temperature ~A over 2 1/2 (63) 225°F (110°C)
Heat Input Min 41.1 (1.6) Max 64.5 (2.5) P.Q.R. 3A - 58.7 KJ/in (2.2 KJ/mm) △1

TRANS
RECEIVED
OK'D BY OK'D BY JWC
SEP 2 1 2009
REQUEST APPROVED
BY DATE 9/21/09

VT - A.O.T.
Moretown - Middlese
Proj No 0284(14)
CBSS No 421

WELDING PROCEDURE

(Metric)

Pass no.	Electrode size	Welding current Amperes	Welding current Volts	Travel speed	Joint detail
1	5/32	597 567 To 627	29.5 27 To 31	18 IPM 16 To 21	AWS D1.5
1	3.9	597 567 To 627	29.5 27 To 31	457 mm/min 406 To 533	

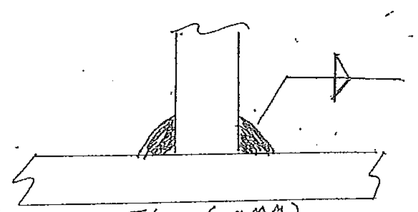

5/16 (8 mm)

MAX 420°F (216°C)

This procedure may vary due to fabrication sequence, fit-up, pass size, etc., within the limitation of variables given in applicable A.W.S. codes or contract specifications

Procedure no. 201 Br. ST of V
Revision no. △1 New P.Q.R
Form III-2

Contractor Casco Bay Steel
Authorized By Paul E Goodale
Date 1-24-05

Casco Bay Steel Structures, Inc.

5 Industry Road
South Portland, Maine 04106

hone: (207) 772-2533 Fax: (207) 772-0580

WELDING PROCEDURE SPECIFICATION

Material specification ASTM 709-Gr 36-50-50W (250-345-345W)
Welding process Shielded Metal Arc Welding (SMAW)
Manual or machine Manual
Position of welding Flat (1F), Horizontal (2F)
Filler metal specification ANSI/AWS A5.1 - A5.5
Filler metal classification E7018 - 8018 C1/C3 - 7028
Flux NA
Shielding gas NA Flow rate NA
Single or multiple pass Single and multiple
Single or multiple arc Single
Welding current AC/DC
Polarity Straight / Reverse
Welding progression
Root treatment Meet AWS specification
Preheat and interpass temperature To 3/4(19) 50F(10C) 3/4(19) To 1 1/2(38) 70F(20C) 1 1/2(38) To 2 1/2(63.5) 150F(65C) over 2 1/2(63.5) 225F(110C)
Postheat temperature NA
Heat Input Min NA Max NA

VTRANS
RECEIVED
OK'D BY OK'D BY JWC
SEP 2 1 2009
REQUESTED APPROVED
BY DATE 9/21/09

VT-A.C.T.
MoreTown-Middlesex
Proj No C284(14)
CBSS No 421

WELDING PROCEDURE

(Metric)

Pass no.	Electrode size	Welding current Amperes	Welding current Volts	Travel speed	AWS D1.5 Joint detail Fillet
	7018				1F
AS. REQ.	1/8 (3.2)	70-170	22-26	AS REQ	
	5/32 (3.9)	120-225	22-26		
	3/16 (4.8)	170-300	24-27		
	8018				
	1/8 (3.2)	90-160	22-26		
	5/32 (3.9)	120-225	22-26		
	3/16 (4.8)	180-290	24-27		
	7028				
	5/32 (3.9)	170-270	22-26		
	3/16 (4.8)	210-330	24-27		


3/16 To 3/8 (5 To 10)


3/8 To 1/2 (10 To 13)


1/2 To 5/8 (13 To 16)

2F


3/16 To 5/16 (5 To 8)

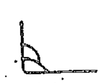
3/8 (10)


7/16 To 5/8 (11 To 16)

This procedure may vary due to fabrication sequence, fit-up, pass size, etc., within the limitation of variables given in applicable A.W.S. codes or contract specifications

AWS QC 1 PAUL E. GOODALE 03100301 CWI

Procedure no. 401
Revision no.
Form III-2

Contractor Casco Bay Steel
Authorized By Paul E. Goodale
Date 3/2/00

Casco Bay Steel Structures, Inc.
75 Spring Hill Road
Saco, Maine 04072
Phone: (207) 282-7360
Fax: (207) 282-117

WELDING PROCEDURE SPECIFICATION

Material specification ASTM 709 Gr 250-345-345W
Welding process Submerged Arc Welding (SAW)
Manual or machine Machine
Position of welding Flat 1F - Horizontal 2F
Filler metal specification AWS A5-23
Filler metal classification Lincoln LA 75, F8A2-EN1-N1
Flux Lincoln 960 Elec. EX 1/8 ± 3/4
Shielding gas NA Flow rate NA
Single or multiple pass Single and Multiple Pass
Single or multiple arc Single
Welding current DC
Polarity DCEN
Welding progression See joint Detail
Root treatment To meet AWS specification
Preheat and interpass temperature To 3/4-50, +3/4 To 1 1/2-70°, 1 1/2 To 2 1/2-150F over 2 1/2 225
Postheat temperature NA
Heat Input Min 30 KJ/in Max 47.1 KJ/in PQR-FCM #9 42.8 KJ/in

VT-A.C.T.
MoreTown-Middlese
Proj No C284(14)
CBSS No 421

WELDING PROCEDURE

Pass no.	Electrode size	Welding current Amperes	Welding current Volts	Travel speed	Joint detail
		293	32	13 IPM	AWS D1-5
1	3/32	264 TO 322	30 TO 34	11 TO 15	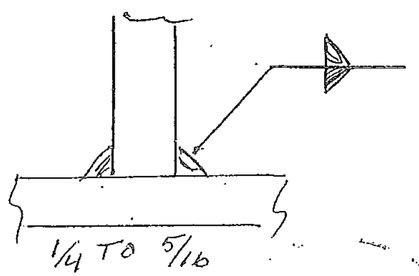

1/4 TO 5/16

VTRANS
RECEIVED
CK'D BY ____ CK'D BY JWC
SEP 2 1 2009
RESUBMIT ____ APPROVED ✓
BY ____ DATE 9/21/09

AWS QC 1 PAUL E. GOODALE 03100201

This procedure may vary due to fabrication sequence, fit-up, pass size, etc., within the limitation of variables given in applicable A.W.S. codes or contract specifications

Procedure no. 250
Revision no. 1 New PQR
Form III-2

Contractor Casco Bay Steel
Authorized By Paul E. Goodale
Date 11-1-06

Casco Bay Steel Structures, Inc.
75 Spring Hill Road
Saco, Maine 04072
Phone: (207) 282-7360
Fax: (207) 282-1179

WELDING PROCEDURE SPECIFICATION

Material specification ASTM-A709/A709M Gr36(250) - A50(345) - A50W (345)
Welding process Submerged Arc welding
Manual or machine Machine
Position of welding Horizontal (2F)
Filler metal specification AWS A5-23
Filler metal classification F8A2-ENi1K-Ni1 Lincoln
Flux Lincoln 960 with LA75 Elec.
Shielding gas NA Flow rate NA
Single or multiple pass Single
Single or multiple arc Single
Welding current DC
Polarity DCEP
Welding progression See Joint Detail
Root treatment Blast clean - wire brush - Free of loose scale & Moisture
Preheat and interpass temperature 3/4-50F, 3/4 To 1 1/2-70F, 1 1/2 To 2 1/2-150F over 2 1/2-225
Postheat temperature NA
Heat Input Min 30.3 KJ/in Max 47.6 KJ/in PQR-FCM #9-43.3 KJ/in

VT - A.C.T.
Moretown-Middle
Proj No 0284(14)
CBSS No 421

WELDING PROCEDURE

Pass no.	Electrode size	Welding current Amperes	Welding current Volts	Travel speed	AWS 5-13 / AWS D1-5 Joint detail
		293	32	13 IPM	
	3/32	270 To 322	30 To 34	11 To 14	

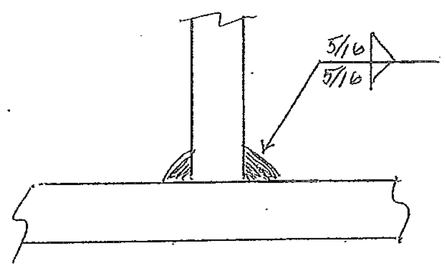

VTRANS
RECEIVED
OK'D BY _____ OK'D BY JWC
SEP 2 1 2009
RESUBMIT _____ APPROVED ✓
BY _____ DATE 9/21/09

AWS QC 1
PAUL E. GOODALE
83100201
CWI

This procedure may vary due to fabrication sequence, fit-up, pass size, etc., within the limitation of variables given in applicable A.W.S. codes or contract specifications

Procedure no. 250
Revision no. _____
Form III-2

Contractor Casco Bay Steel
Authorized By Paul E. Goodale
Date 12-6-06

Casco Bay Steel Structures, Inc.
75 Spring Hill Road
Saco, Maine 04072
Phone: (207) 282-7360
Fax: (207) 282-117

WELDING PROCEDURE SPECIFICATION

Material specification ASTM 709 - Gr36-50-50W / A709M - Gr250-345-345W
Welding process Submerged Arc welding (SAW)
Manual or machine Machine
Position of welding Flat
Filler metal specification AWS A5-23
Filler metal classification F8A2-ENiLK-Nil
Flux Lincoln 960 with LA75 Elec. - Elec Ex.
Shielding gas NA Flow rate NA
Single or multiple pass Both
Single or multiple arc Single
Welding current DC
Polarity DC EP
Welding progression See detaile
Root treatment wire brush. area To be Free of loose Scale - Slag - rust and Moisture
Preheat and interpass temperature To 20mm (3/4) 10 (50), 20+ (3/4+) To 40 (1½) 20 (70), 40+ (1½+) To 60 (2½) 65 (150)
Postheat temperature NA over 60 (2½) 110 (225)
Heat Input Min 41.1 Max 64.5 P.Q.R-FCM 3A - 58.7 KJ/m

VT - A.O.T.
MoreTown-Middlesex
Proj NO 0284(14)
CBSS NO 421

WELDING PROCEDURE

Pass no.	Electrode size	Welding current Amperes	Welding current Volts	Travel speed
		597	29.5	18 IPM
	5/32	567 To 627	27 To 31	16 To 21

AWS 5-13
AWS D1-5 Joint detail:

Side - 1

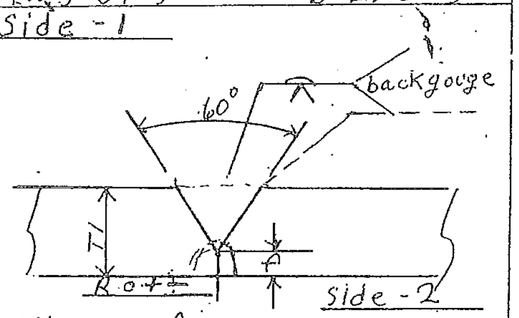

T1	A
1/2 To 1"	1/4 min
over 1" To 1½	3/8 min
over 1½ To 2	1/2 min

Backgouge side 2 Max heat 420 F

VTRANS
RECEIVED
OK'D BY ____ OK'D BY JWC
SEP 2 1 2009
REQUEST ____ APPROVED ✓
BY ____ DATE 9/21/09

This procedure may vary due to fabrication sequence, fit-up, pass size, etc., within the limitation of variables given in applicable A.W.S. codes or contract specifications

Procedure no. 202
Revision no. 1 - Root 0±
Form III-2

Contractor Casco Bay Steel
Authorized By Paul E. [signature]
Date 12-6-06

AWS QC PAUL E. GOODALE 83100201 CWI

STATE OF MAINE
DEPARTMENT OF TRANSPORTATION
☑ Approved ☐ Returned for Corrections
JAN 3, 2006
☐ Approved as noted ☐ Rejected
William Doukas, P.E.

VTRANS
RECEIVED
JAN 2 6 2010

CK'D BY _____ OK'D BY JCL

RESUBMIT _____ APPROVED ✓

DATE 01/29/10

WELDING PROCEDURE SPECIFICATION (WPS) YES (X)
OR PROCEDURE QUALIFICATION RECORD (PQR) YES ( ) ___X___ QUALIFIED BY TESTING _____ BY

Company Name ARC ENTERPRISES, INC.
Welding Process(es) GMAW
Supporting PQR No.(s) _____

Identification # ARC WPS SMZ
Revision 2 Date 12/5/2005 By SVH
Authorized By Steve Howard Date 12/5/2005
Type - Manual ( ) Semi-Automatic (X)
Machine ( ) Automatic ( )

JOINT DESIGN USED
Type FILLET
Single (X) Double Weld ( )
Backing YES ( ) NO (X)
Backing Material N/A
Root Opening 0 Root Face Dimension N/A
Groove Angle N/A Position (J-U) N/A
Back Gouging YES ( ) NO (X) Method N/A

BASE METALS
Material Spec A709
Type or Grade 36 50
Thickness Groove N/A Fillet UNLIMITED
Diameter (Pipe) N/A

FILLER METALS
AWS Specification A5.18
AWS Classification ER70S-7 ESAB 87 HP

SHIELDING 98%AR 2%O
Flux _____ Gas B8-2
Composition _____
Electrode - Flux (Class) Flow Rate 25 - 40
n/a Gas Cup Size 5/8

T ≤ 3/4 50° 3/4 - 1-1/2 = 70° 1-1/2 - 2-1/2 = 150° OVER 2-1/2 = 225°

POSITION
Position of Groove _____ Fillet 1F 2F
Vertical Progression ( ) UP ( ) DOWN

ELECTRICAL CHARACTERISTICS
Transfer Mode (FCAW) Short Circuiting ( )
Globular ( ) Spray (X)
Current: AC ( ) DCEP (X) DCEN ( )
Pulsed ( )
OTHER: _____

TECHNIQUE
Stringer or Weave Bead STRINGER
Multi-pass or Single Pass (per side) SINGLE / Multi
Number of Electrodes 1
Electrode Spacing Longitudinal N/A
Lateral N/A
Angle N/A
Contact Tube to Work Distance 5/8 - 3/4
Peening N/A
Interpass Cleaning: _____

RECEIVED
JAN 2 0 2010

POSTWELD HEAT TREATMENT OK'D BY _____
Temp N/A
Time N/A

WELDING PROCEDURE RESUBMIT _____ APPROVED _____ BY _____

Pass or Weld Layer(s)	Size S	Filler Metals Class	Filler Metals Diameter	Current Type & Polarity	Current Amps or Wire Feed Speed	Volts	Travel Speed
1F 2F	3/16	ER70S-7	0.035	DCEP	180 - 220	25 - 27	7 - 9
1 1	1/4	ER70S-7	0.035	DCEP	180 - 220	25 - 27	5 - 6
1 1	5/16	ER70S-7	0.035	DCEP	180 - 220	25 - 27	4 - 5
1 1	3/8	ER70S-7	0.035	DCEP	180 - 220	25 - 27	3 - 4
1 2	7/16	ER70S-7	0.035	DCEP	180 - 220	25 - 27	+ 2 - 3
1 2	1/2	ER70S-7	0.045	DCEP	270 - 330	28 - 30	+ 2 - 3 + (4-6)

Joint Details

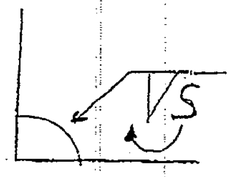

+ Sec 4.14.3 AWS D1.5

For Steve:-

VTRANS
RECEIVED
OK'D BY _____ OK'D BY JWC
JAN 2 0 2010
RESUBMIT _____ APPROVED ✓
BY _____ DATE 01/29/10

WELDING PROCEDURE SPECIFICATION (WPS) YES (X)
PREQUALIFIED _X_ QUALIFIED BY TESTING _____
or PROCEDURE QUALIFICATION RECORD (PQR) YES ( )

Identification # ARC WPS 19
Revision _____ Date _____ By _____
Authorized by STEVE HOWARD Date 3/22/06
Type - Manual ( ) Semi - Automatic (X)
Machine ( ) Automatic ( )

Company Name ARC ENTERPRISES, INC.
Welding Process(es) GMAW
Supporting PQR No.(s) _____

JOINT DESIGN USED
Type B-U3-GF
Single Backing YES ( ) Double Weld (X) NO [X]
Backing Material _____
Root Opening 0-1/8 Root Face Dimension 0-1/8
Groove Angle 60 (+10, -5) Radius (J-U) _____
Back Gouging YES (X) NO ( ) Method _____

BASE METALS
Material Spec A709 A572
Type or Grade 50
Thickness / Diameter (Pipe) Groove U Fillet _____

FILLER METALS
AWS Specification A5.18
AWS Classification ER70S-7 ESAB 87 HP

SHIELDING
Flux _____ Gas 98%Argon 2% O
Composition _____
Electrode - Flux (Class) _____ Flow Rate 25-40 CFH
Gas Cup Size 5/8

POSITION
Position of Groove 1G Fillet _____
Vertical Progression UP ( ) DOWN

ELECTRICAL CHARACTERISTICS
Transfer Mode (FCAW) Short Circuiting ( )
Globular ( ) Spray (X)
Current: AC ( ) DCEP (X) DCEN ( )
Pulsed ( )
OTHER: _____

TECHNIQUE
Stringer or Weave Bead Stringer
Multi-pass or Single Pass (per side) Multi
Number of Electrodes 1
Electrode Spacing Longitudinal _____
Lateral _____
Angle _____
Contact Tube to Work Distance 3/8-3/4
Peening _____
Interpass Cleaning: _____

RECEIVED
CK'D BY _____ OK'D BY _____
JAN 2 0 2010
RESUBMIT _____ APPROVED _____
BY _____ DATE _____

POSTWELD HEAT TREATMENT
Temp _____
Time _____

Non-Structural Applications

WELDING PROCEDURE

Pass or Weld Layer(s)	WELD size	Filler Metals Class	Filler Metals Diameter	Current Type & Polarity	Current Amps or Wire Feed Speed	Volts	Travel Speed
4	1/2"	ER70S-7	0.035	DCEP	180-220	26-27	7-11 ipm

Joint Details

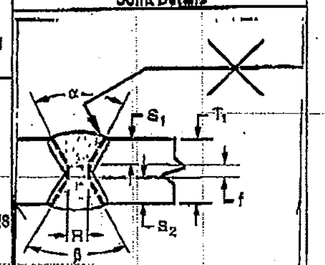

STATE OF MAINE
DEPARTMENT OF TRANSPORTATION
☐ REVIEWED ☑ REVIEWED WITH COMMENTS
☐ REJECTED ☐ RETURNED FOR CORRECTIONS
MAR 03 2008

ATTn. Bill Doukas

THIS DOCUMENT WAS REVIEWED IN ACCORDANCE WITH STATE OF MAINE SPECIFICATIONS SECTION 105.7 WORKING DRAWINGS
William B. Doukas, P.E.

DSBROWN

Production Joint Welding Procedure Specification (D1.5-02)

Procedure No: A-(MC)GF-01 Date Issued: 9-28-04 Revision No: 1 Rev. Date: 2-5-09

Contractor (Fabricator) D. S. Brown Company Prepared by: James R. Connor, Quality Assurance Manager

1. Non-Fracture Critical [X] Fracture Critical [ ] WPS Expiration Date: 9-28-09
2. Qualified in accordance with: AWS D1.5- 2002 (5.12.1)
   Referenced PQR No(s). PQR-(MC)GMAW-01(04) __ , __ , ____
   Referenced FWST No(s). PQR-(MC)GMAW-FWST-01A(04) , PQR-(MC)GMAW-FWST-01B(04) , __ , __
3. Material specification(s) ASTM A709 Gr. 36, 50, 50W
4. Material Thickness (es) Unlimited
5. Welding process GMAW
6. Manual [ ] , machine [X] , or semiautomatic [X]
7. Position(s) of welding 1F, 2F
8. Filler metal specification AWS A5.18
9. Filler metal class and brand name E70C-6M Corex Metal-Core Maxim
10. Flux class & brand N/A , Type N/A
11. Shielding gas 75% Ar / 25% CO2 Flow rate 45 CFH
12. Single pass [X] Or multiple pass [X]
13. Single arc [X] Or multiple arc [ ]
14. Welding Current DCEP
15. Polarity Reverse
16. Welding progression stringers
17. Root treatment Clean to bright sound metal or per AWS D1.5 (3.2.1 & 3.11)
18. Postheat treatment N/A
19. Calculated Heat Input (KJ/In) Min 30.6 Kj/in Max 51.1 Kj/in
20. Electrode extension (electrical stickout) 3/4"

For DOT Approval

√ TRANS
RECEIVED
OK'D BY ____ OK'D BY JLK
OCT 0 9 2009
RECEIVED ____ APPROVED √
BY DATE 10/29/09

Weld size (In)	Pass No(s).	Electrode Size (In)	Welding Process Variables AMPS/WFS*	Welding Process Variables VOLTS	Travel Speed (IPM)
**1/4"	1	.052"	265-320	31-34.5	13-16
5/16"	1	.052"	265-320	31-34.5	13-16
3/8"	1-3	.052"	265-320	31-34.5	13-16
7/16"	2-4	.052"	265-320	31-34.5	13-16
1/2"	4-6	.052"	265-320	31-34.5	13-16
5/8"	5-7	.052"	265-320	31-34.5	13-16
3/4"	6-8	.052"	265-320	31-34.5	13-16

Joint Detail (Fillet)
Show all dimensions, weld sizes, passes, and AWS symbols

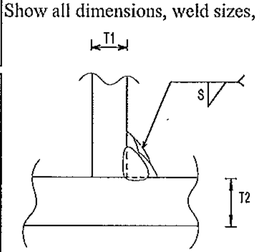

T1 = Varies
T2 = Varies
S = Weld Size

**** T1 & T2 equal to or less than 3/4" for 1/4" welds.**

* Wire feed speed may be used along with amperage (include chart)

Prepared By: James R. Connor DSB QA Manager

Project: ____

DSB Job: 27445-1104

Preheat and Interpass Temperature Chart

Base Metal Thickness range	Minimum Preheat (°F)	Max Preheat & Interpass (°F)
= 3/4"	50°F	450°F
>3/4" to =1.5"	70°F	450°F
>1.5" to =2.5"	150°F	450°F
>2.5"	225°F	450°F

Note: When this procedure is used for A709Gr50W materials, it shall be limited to 5/16" single pass or material be coated.

PROJECT NAME_____

PREQUALIFIED JOINT WELDING PROCEDURE PROJECT NUMBER_____
PROCEDURE SPECIFICATION

Material specification A36:A572:A588
Welding process FCAW
Manual or machine SEMI-AUTOMATIC
Position of welding FLAT OR HORIZONTAL
Filler metal specification AWS 5.20
Filler metal classification ALLOY RODS DUAL SHIELD II 71 ULTRA (E71T-1)
Flux N/A
Shielding gas CO_2 Flow rate 35 CFH
Single or multiple pass SINGLE AND MULTIPLE
Single or multiple arc SINGLE ELECTRICAL STICK-OUT 3/8"-3/4"
Welding current DC
Polarity REVERSE
Welding progression N/A
Root treatment NONE
Preheat and interpass temperature 50°to 3/8"INCL.;70°to1"INCL.;150°to 2"INCL
Postheat treatment NONE
Supported by WPS 007 and 008

VTRANS
RECEIVED
NOV 24 2009

WELDING PROCEDURE CK'D BY_____ OK'D BY Jwe

RESUBMIT_____ APPROVED ✓
BY Joint detail DATE 12/10/09

Pass no.	Electrode size	Welding current: Amperes	Welding current: Volts	Travel speed (I.P.M.)	Weld Size (e)
1	.045	220-240	26-28	16-18	3/16"
1	.045	220-240	26-28	12-13	1/4"
All	.045	210-230	25-27	9-10	5/16"
1	.045	220-240	26-28	16-18	3/8" (3 passes)
2	.045	220-240	26-28	16-18	
3	.045	220-240	26-28	16-18	
1	.045	210-230	25-27	9-11	7/16" (3 passes)
2	.045	210-230	25-27	9-11	
3	.045	210-230	25-27	9-11	

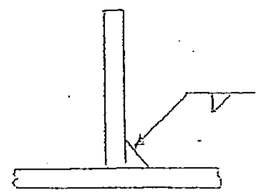

This procedure may vary due to fabrication sequence, fit-up, pass size, etc., within the limitation of variables given in Section 5.

Procedure no. DS-16

Revision

Contractor Merrimack Sheet Metal, Inc.

Authorized by Scott Blanchette

11/24/09

Glastonbury, CT

Welding Procedure Specification

Material specification: A572 gr 50, A709 Gr 50
Welding process: Gas Metal Arc Welding (GMAW)
Manual, semi-automatic, or automatic: Semi-Automatic
Position of welding: Flat (1F) or Horizontal (2F)
Filler metal specification: AWS A5.18
Filler metal classification: ER70S-3
Electrode and manufacturer: Lincoln Electric Lincoln Weld L-50
Flux and manufacturer: N/A
Shielding gas: 85% Argon / 15% CO2 Flow rate: 19-27 L / min
Single or multiple pass: Single or Multiple
Single or multiple arc: Single
Welding current: DCEP
Polarity: Reverse - electrode positive
Welding progression: Stringers
Root treatment: clean base metal
Preheat and interpass temperature: base metal up to 3/4" (50°F) ; over 3/4 thru 1-1/2" (150°F) : over 1-1/2" thru 2-1/2" (225°F)
Postheat treatment: None
Electrode extension: 3/4" ± 1/4"

WELDING PROCEDURE

Weld size	Pass no.	Electrode size	Welding parameters Amperes	Welding parameters Volts	Travel speed	Joint detail
5/16"	1	0.062"	275 A ± 25	25 V ± 2	8-10 ipm	
7/16"	1 & 2	0.062"	↓	↓	8-10 ipm	

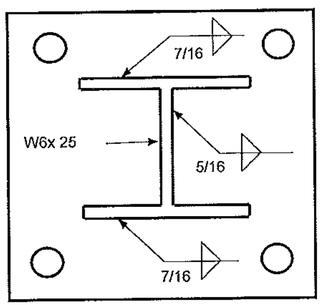

VTRANS RECEIVED
MAY 07 2010
CK'D BY ... OK'D BY JWC
RESUBMIT ... APPROVED ✓
BY ... DATE 5/10/10

This procedure may vary due to fabrication sequence, fit-up, pass size, etc. within the limitation of variables given in section 5 of latest edition AWS D1.5

WPS no. W-1744-A
Revision no. 0
Supporting PQR no. Pre-Qualified
Project Name Moretown - Middlesex, VT

Fabricator: Highway Safety Corporation
Prepared By: Paul Radice
Date: 05-07-10
Project Number: BRS 0284(14)

PAUL RADICE
CWI 98070221
QC1 EXP. 7/01/10

PROJECT NAME

QUALIFIED JOINT WELDING PROCEDURE PROJECT NUMBER

PROCEDURE SPECIFICATION

Material specification A36;A572;A588

Welding process FCAW

Manual or machine SEMI-AUTOMATIC

Position of welding FLAT for groove welds' Horizontal for fillet welds 1G: 2F

Filler metal specification AWS 5.20

Filler metal classification ALLOY RODS DUAL SHIELD TI 71 ULTRA (E71T-1)

Flux N/A

Shielding gas CO_2 Flow rate 35 CFH

Single or multiple pass SINGLE AND MULTIPLE

Single or multiple arc SINGLE ELECTRICAL STICK-OUT 3/8"-3/4"

Welding current DC

Polarity REVERSE

Welding progression N/A

Root treatment NONE

Preheat and interpass temperature 50° to 3/4"INCL ;70° to 1 3"INCL ;150° to 1 3/4" INCL

Postheat treatment NONE

Supported by PQR 007 and 008

RECEIVED

CK'D BY ____ CK'D BY JAC

NOV 2 4 2009

RESUBMIT ____ APPROVED ✓

BY Joint detail DATE 12/10/09

WELDING PROCEDURE

Pass no.	Electrode size	Welding current Amperes	Welding current Volts	Travel speed (I.P.M.)	Weld Size (e)
		GROOVE WELDS			
1	.045	220-240	26-28	16-18	3/16"
1	.045	220-240	26-28	10-12	1/4"
all	.045	220-240	26-28	14-16	5/16"
		FILLET WELDS			

FILLET WELDS SHALL EQUAL 1/4 OF t

BUT NOT MORE THAN 3/8"

SEE PROCEDURE DS-16 FOR PARAMETERS OF FILLET WELDS.

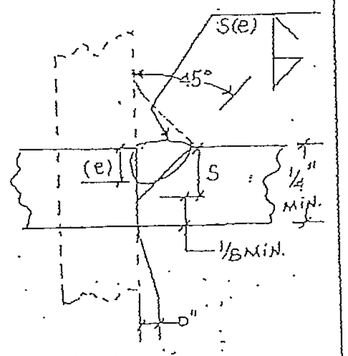

TC-P4-GF

This procedure may vary due to fabrication sequence, fit-up, pass size, etc., within the limitation of variables given in Section 5.

Procedure no. DS-13

Revision no.

Form E-2

Contractor Merrimack Sheet Metal, Inc.

Authorized by Scott Blanchette

Date 1/26/01

WINTERSET
LYNDONVILLE · VERMONT

PREQUALIFIED JOINT WELDING PROCEDURE
PROCEDURE SPECIFICATION

Material specification: ASTM-A709/A709M - GRADE-36(250), 50 (345) 50W (345W)
Welding process: SHIELDED METAL ARC WELDING (SMAW)
Manual or machine: MANUAL
Position of welding: FLAT-VERTICAL-HORIZONTAL-OVERHEAD
Filler metal specification: AWS A5-1 & A5-5
Filler metal classification: 7018
Flux: N/A
Shielding gas: N/A Flow rate: N/A
Single or multiple pass: SINGLE & MULTIPLE
Single or multiple arc: SINGLE
Welding current: AC/DC
Polarity: STRAIGHT OR REVERSE
Welding progression: SEE JOINT DETAIL
Root treatment: WIRE BRUSH AREA TO BE FREE OF LOOSE SCALE, RUST MOISTURE
Preheat and interpass temperature: TO 3/4"(19) 50°F(10°C), 3/4"(19) TO 1 1/2"(38) - 70°F(20°C)
Postheat treatment: N/A 1 1/2"(38) TO 2 1/2(63.5) 150°F (65°C)

WELDING PROCEDURE

Pass no.	Electrode size	Welding current: Amperes	Welding current: Volts	Travel speed
As Req'd	1/8	90-170	22-26	As Req'd
	5/32	120-200	22-26	
	3/16	170-250	24-27	

Joint detail: AWS D1-5 FILLET

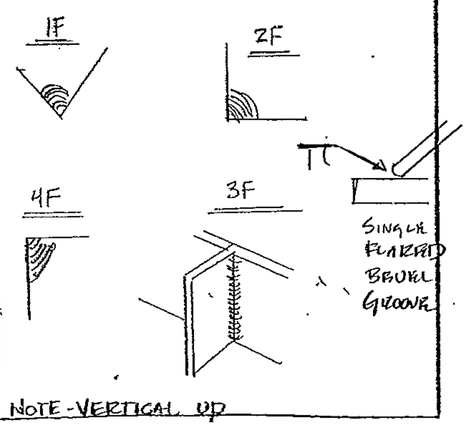

NOTE - VERTICAL UP

This procedure may vary due to fabrication sequence, fit-up, pass size, etc., within the limitation of variables given in Section 5.

Procedure no. 401-A - FIELD WELD
Revision no.
LOCATION: MISC FIELD WELDS
EXP DAM STUDS, SIDE PL TO BEAM

Contractor: WINTERSET, INC.
Authorized by: GLENN A. LAVOIE, P.E.
Date: 8-14-09
PROJECT: MORETOWN - MIDDLESEX
BRS 0284(14)

PREQUALIFIED JOINT WELDING PROCEDURE
PROCEDURE SPECIFICATION

Material specification (Aashto M270 Grade 345) 50 Ksi
Welding process SMAW
Manual or machine MANUAL
Position of welding HORIZONTAL / VERTICAL / OVERHEAD 4F
Filler metal specification AWS A5.1
Filler metal classification E 7018
Flux N/A
Shielding gas N/A Flow rate N/A
Single or multiple pass MULTIPLE PASS FOR 3/4" SINGLE FOR 5/16
Single or multiple arc SINGLE
Welding current DC
Polarity REVERSE
Welding progression
Root treatment WIRE BRUSH AREA
Preheat and interpass temperature 50° MIN
Postheat treatment N/A

WELDING PROCEDURE

Pass no.	Electrode size	Welding current: Amperes	Welding current: Volts	Travel speed	Joint detail
1	1/8	125	30	10"	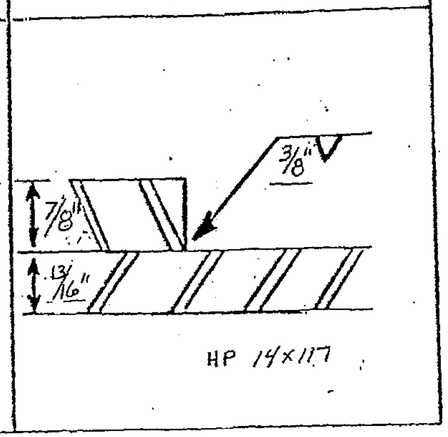
2 or more		±10%	±7%	IPM	

This procedure may vary due to fabrication sequence, fit-up, pass size, etc., within the limitation of variables given in Section 5.

Procedure no. SPLICE PLATE
Revision no. 0

Contractor WINTERSET INC.
Authorized by GLENN A. LAVOIE, P.E.
Date 8-13-09
PROJECT: MORRETOWN - MIDDLESEX BRS 0284(14)

PREQUALIFIED JOINT WELDING PROCEDURE
PROCEDURE SPECIFICATION

Material specification (AASHTO M270 GRADE 345) A50
Welding process SMAW
Manual or machine MANUAL
Position of welding HORIZONTAL 2G
Filler metal specification AWS A 5.1
Filler metal classification E 7018
Flux NA
Shielding gas N/A Flow rate N/A
Single or multiple pass SINGLE
Single or multiple arc SINGLE
Welding current DC
Polarity REVERSE
Welding progression
Root treatment WIRE BRUSH AREA TO BE FREE OF LOOSE SCALE, RUST, MOISTURE
Preheat and interpass temperature 70° MIN OVER 3/0 T
Postheat treatment N/A

WELDING PROCEDURE

Pass no	Electrode size	Welding current: Amperes	Welding current: Volts	Travel speed
1	1/8	125 ±10%	30 ±7%	10 IPM
1	5/32	125 ±10%	30 ±7%	10 IPM

Joint detail

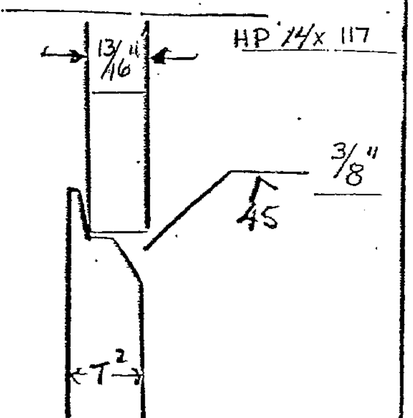

This procedure may vary due to fabrication sequence, fit-up, pass size, etc., within the limitation of variables given in Section 5.

Procedure no. PILE POINT
Revision no. -0-

Contractor: WINTERSET, INC.
Authorized by: GLENN A. LAVOIE, P.E.
Date: 8-13-09
PROJECT: MORETOWN-MIDDLESEX

PREQUALIFIED JOINT WELDING PROCEDURE
PROCEDURE SPECIFICATION

Material specification (AASHTO M270 GRADE 345) A50
Welding process SMAW
Manual or machine MANUAL
Position of welding HORIZONTAL
Filler metal specification AWS A5.1
Filler metal classification E 7018
Flux N/A
Shielding gas N/A Flow rate N/A
Single or multiple pass MULTIPLE
Single or multiple arc SINGLE
Welding current DC
Polarity REVERSE
Welding progression SEE JOINT DETAIL
Root treatment NONE
Preheat and interpass temperature 50° MIN
Postheat treatment N/A

* OPERATOR MUST BE CERTIFIED IN POSITION USED

WELDING PROCEDURE

Pass no	Electrode size	Welding current: Amperes	Welding current: Volts	Travel speed	Joint detail
1	1/8	90-170	22-26	AS REQ'D	
AS REQ'D	3/16	170-250	24-27	AS REQ'D	

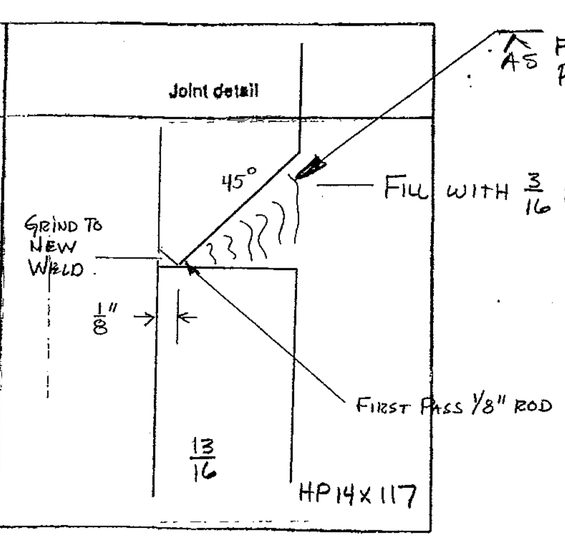

This procedure may vary due to fabrication sequence, fit-up, pass size, etc., within the limitation of variables given in Section 5.

Procedure no. PILE SPLICE
Revision no. 0
Contractor WINTERSET, INC.
Authorized by GLENN A. LAVOIE, P.E.
Date AUGUST 25, 2008
PROJECT: MORRISTOWN - MIDDLESEX
BIRS 0284(14)

VERMONT

State of Vermont
PDD/Structures Design Section
National Life Building – Drawer 33
Montpelier, VT 05633-5001
www.aot.state.vt.us

Agency of Transportation

[phone] 802-828-2621
[fax] 802-828-3566
[ttd] 800-253-0191

Highway Safety Corp.
239 Commerce Street
Glastonbury, CT 06033-0358

DATE: May 12, 2010

Project Name: Moretown-Middlesex **Project #: BRS 0284 (14)**

Structure Identification: US Route 2, BR. 50 over the Winooski River

The following Bridge Railing and Approach Railing details Items #525.33 and 621.72, Bridge Railing, Galvanized NETC 2 Rail and Guard Rail Approach Section Galvanized NETC 2 Rail, for the above project Vendor's Job #1744 transmitted with your e-mails dated May 5, 2010 and May 10, 2010 have been reviewed and are being returned herewith.

Sheets: 1, 2 and 3 of 3, and the welding procedures
are approved

You must provide notice to our fabrication inspector, Jeff Clark, as to the date fabrication represented by these drawings will begin. That notice must be received and acknowledged at least seven days prior to that date, as per Specification 506.03. Jeff may be contacted by phone at (802)828-0044 or email at jeff.clark@state.vt.us. Any material fabricated prior to the notification date is subject to rejection without further cause.

Sincerely,

Martha Evans-Mongeon
Project Manager

Attachments
cc: [x] Resident Engineer w/prints, Bob Suckert
[x] Shop Inspector w/prints, Jeff Clark
[x] Contractor w/prints, Winterset, Inc.
[x] Subcontractor – letter only, F.R. Lafayette
[x] Construction Division – letter only
[x] Materials & Research Section (C&IA Unit) – letter only
[x] Files MEM

VTrans Working to Get You There
Vermont Agency of Transportation

Highway Safety Corporation

Glastonbury, CT

Welding Procedure Specification

Material specification: A572 gr 50, A709 Gr 50

Welding process: Gas Metal Arc Welding (GMAW)

Manual, semi-automatic, or automatic: Semi-Automatic

Position of welding: Flat (1F) or Horizontal (2F)

Filler metal specification: AWS A5.18

Filler metal classification: ER70S-3

Electrode and manufacturer: Lincoln Electric Lincoln Weld L-50

Flux and manufacturer: N/A

Shielding gas: 85% Argon / 15% CO2 Flow rate: 19-27 L / min

Single or multiple pass: Single or Multiple

Single or multiple arc: Single

Welding current: DCEP

Polarity: Reverse - electrode positive

Welding progression: Stringers

Root treatment: clean base metal

Preheat and interpass temperature: base metal up to 3/4" (50°F) ; over 3/4 thru 1-1/2" (150°F) : over 1-1/2" thru 2-1/2" (225°F)

Postheat treatment: Nohe

Electrode extension: 3/4" ± 1/4"

WELDING PROCEDURE

Weld size	Pass no.	Electrode size	Welding parameters Amperes	Welding parameters Volts	Travel speed	Joint detail
5/16"	1	0.062"	275 A ± 25	25 V ± 2	8-10 ipm	
7/16"	1 & 2	0.062"	↓	↓	8-10 ipm	

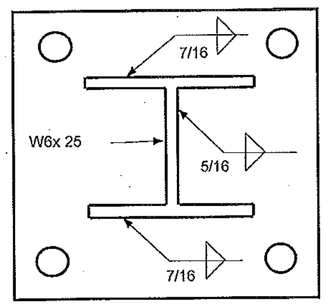

VTRANS RECEIVED
CK'D BY CK'D BY JWC
MAY 07 2010
RESUBMIT APPROVED
BY DATE 5/10/10

This procedure may vary due to fabrication sequence, fit-up, pass size, etc. within the limitation of variables given in section 5 of latest edition AWS D1.5

WPS no. W-1744-A

Revision no. 0

Supporting PQR no. Pre-Qualified

Project Name Moretown - Middlesex, VT

Fabricator Highway Safety Corporation

Prepared By: Paul Radice

Date 05-07-10

Project Number BRS 0284(14)

PAUL RADICE CWI 98070221 QCI EXP. 7/01/10

121.72

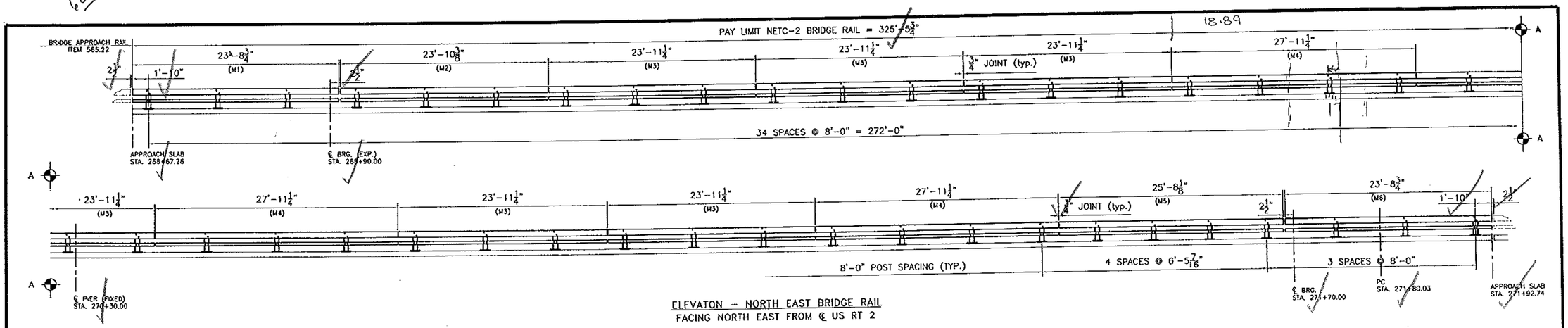

ELEVATON – NORTH EAST BRIDGE RAIL
FACING NORTH EAST FROM ℄ US RT 2

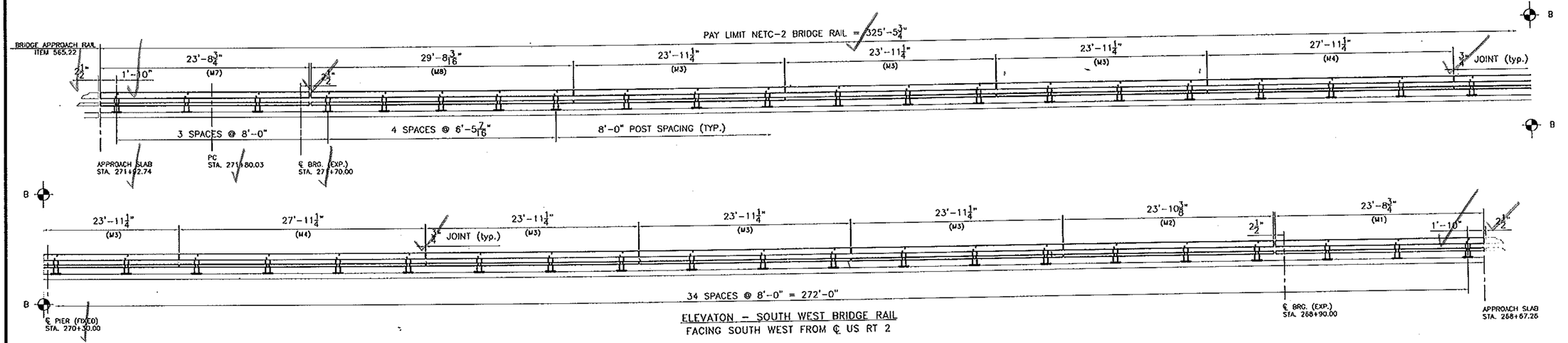

ELEVATON – SOUTH WEST BRIDGE RAIL
FACING SOUTH WEST FROM ℄ US RT 2

BILL OF MATERIAL (BOTH SIDES OF BRIDGE)

Mk.	Qty.	Description	Size/Shape	Length or Spacing	Material
	84	BRIDGE RAIL PED POST 2'-0 3/8" OAH W/ BASE PLATE			
	84	POST UPRIGHT	W6 x 25	1'-11 3/8"	A709 Gr. 50
	84	POST BASE PLATE	7" x 10"	1'-2"	A709 Gr. 50
	24	UPPER SPLICE TUBE FOR 8 x 4 RAIL			
	24	TUBE	TS 7x3x1/8	1'-8"	A500 Gr. B
	48	WELDED LOCK NUT (OUTER HOLES ONLY)	5/8"	---	A563
	24	LOWER SPLICE TUBE FOR 4 x4 RAIL			
	24	TUBE	TS 3x3x5/16	1'-8"	A500 Gr. B
	48	WELDED LOCK NUT (OUTER HOLES ONLY)	5/8"	---	A563
M1	2	UPPER RAIL	TS 8x4x5/16	23'-8.750"	A500 Gr. B
	2	LOWER RAIL	TS 4x4x1/4	23'-8.750"	A500 Gr. B
M2	2	UPPER RAIL	TS 8x4x5/16	23'-10.375"	A500 Gr. B
	2	LOWER RAIL	TS 4x4x1/4	23'-10.375"	A500 Gr. B
M3	13	UPPER RAIL	TS 8x4x5/16	23'-11.250"	A500 Gr. B
	13	LOWER RAIL	TS 4x4x1/4	23'-10.250"	A500 Gr. B
M4	5	UPPER RAIL	TS 8x4x5/16	27'-11.250"	A500 Gr. B
	5	LOWER RAIL	TS 4x4x1/4	27'-11.250"	A500 Gr. B
M5	1	UPPER RAIL	TS 8x4x5/16	25'-8.125"	A500 Gr. B
	1	LOWER RAIL	TS 4x4x1/4	25'-8.125"	A500 Gr. B
M6	1	SHOP CURVED UPPER RAIL	TS 8x4x5/16	23'-8.750"	A500 Gr. B
	1	SHOP CURVED LOWER RAIL	TS 4x4x1/4	23'-8.750"	A500 Gr. B
M7	1	SHOP CURVED UPPER RAIL	TS 8x4x5/16	23'-8.750"	A500 Gr. B
	1	SHOP CURVED LOWER RAIL	TS 4x4x1/4	23'-8.750"	A500 Gr. B
M8	1	UPPER RAIL	TS 8x4x5/16	29'-8.188"	A500 Gr. B
	1	LOWER RAIL	TS 4x4x1/4	29'-8.188"	A500 Gr. B

BILL OF MATERIAL CONTINUES

84	ANCHOR PLATE	3/8 x 9 3/8	1'-1"	A36
336	ANCHOR BOLTS	1" DIA.	12"	A449
336	HEX NUT	1" DIA.	---	A563
336	HEAVY HEX NUT	1" DIA.	---	A563DH
336	HEX JAM NUT	1" DIA.	---	A563
336	WASHER	1" DIA.	---	F436
336	ROUND HEAD BOLT	3/4" DIA.	6"	M164 type 1
336	LOCK NUT	3/4" DIA.	---	A563DH
336	WASHER	3/4" DIA.	---	F436
192	CAP SCREW	5/8" DIA.	1.75"	A325
192	WASHER	5/8" DIA.	---	F436
84	BEARING PAD	1/8"x10"	1'-2"	M251

RECEIVED
CK'D BY SSS OK'D BY
MAY 0 5 2010
RESUBMIT APPROVED ✓
BY DATE 5/6/10

TOTAL PAY LIMIT ITEM 525.33 = 651'

REVISIONS		
No.	Remarks	Date

NOTE:
1. FRONT FACE OF TUBE M7 TO BE PARTIALLY CURVED TO 492' CONCAVE RADIUS.

2. FRONT FACE OF TUBE M8 TO BE PARTIALLY CURVED TO 462' CONVEX RADIUS.

HIGHWAY SAFETY CORP
GLASTONBURY, CT
860-633-9445

ITEM 525.33 BRIDGE RAILING – NETC 2 RAIL
US RT 2 OVER WINOOSKI RIVER
MORETOWN – MIDDLESEX, VERMONT
PROJECT NUMBER: BRS 0284(14)

CERTIFIED FABRICATOR

HSC JOB NO. 1744
SHEET NO. 1 of X

GENERAL CONTRACTOR
SUB CONTRACTOR F.R. LAFAYETTE, INC.

DRAWN	CHECKED	DATE	SCALE	SIZE
MHM	PAR	5/4/2010	NONE	D

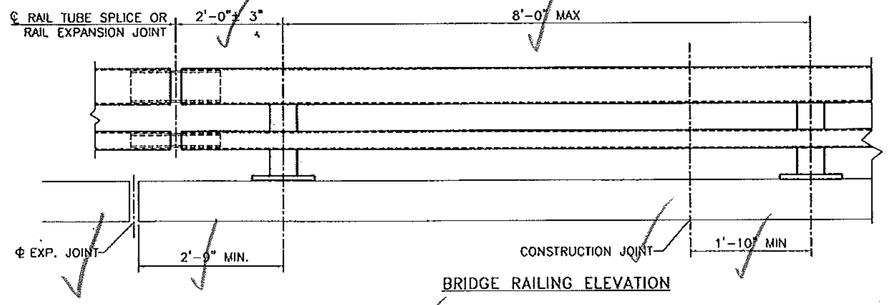

BRIDGE RAILING ELEVATION

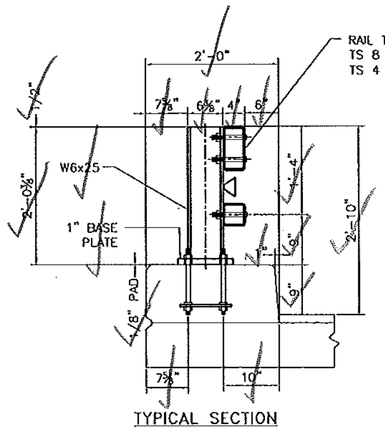

TYPICAL SECTION

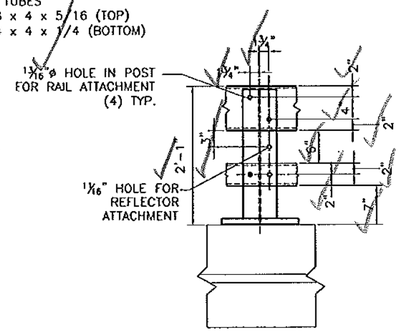

ELEVATION

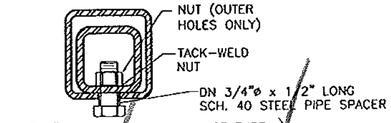

EXPANSION JOINT SECTION

FOR DETAILS NOT SHOWN, SEE "RAIL TUBE SPLICE SECTION."

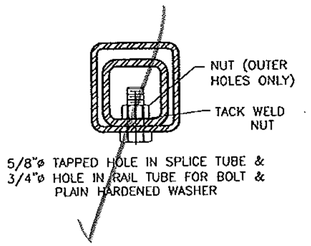

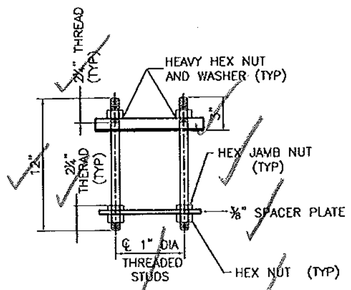

RAIL POST ANCHORAGE

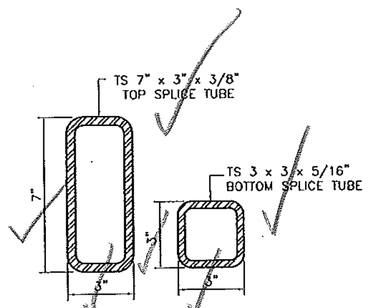

RAIL TUBE SPLICE SECTION

NOTES:

1. ALL RAILINGS AND MATERIALS SHALL CONFORM TO THE PROVISION OF SECTION 525, "RAILINGS OF THE STANDARD SPECIFICATION FOR CONSTRUCTION".
2. PRIOR TO GALVANIZING, ALL EXPOSED CUT OR SHEARED EDGES SHALL BE ROUNDED TO A 1/16" RADIUS AND BE FREE OF BURRS.
3. RAIL POSTS SHALL BE SET NORMAL TO GRADE.
4. SECTIONS OF RAIL TUBE SHALL BE ATTACHED TO A MINIMUM OF TWO (2) RAIL POSTS AND PREFERABLY TO AT LEAST FOUR (4) POSTS.
5. RAIL TUBE EXPANSION JOINT SHALL BE PROVIDED IN ANY RAIL BAY SPANNING A SUPERSTRUCTURE EXPANSION JOINT. EXPANSION JOINT WIDTH SHALL BE "X" AT 45°F AND WILL BE ADJUSTED IN THE FIELD BY THE ENGINEER FOR OTHER TEMPERATURES.
6. ALL PARTS SHALL BE GALVANIZED AFTER FABRICATION IN ACCORDANCE WITH AASHTO M111, EXCEPT HARDWARE, WHICH SHALL MEET THE REQUIREMENTS OF AASHTO M232.
7. RAIL POST ANCHORING NUTS SHALL BE TIGHTENED TO A SNUG FIT AND GIVEN AN ADDITIONAL ONE-EIGHTH TURN.
8. RAIL TUBES SHALL BE ATTACHED USING 3/4" FULL DIAMETER BODY AASHTO M164 (TYPE 1) ROUND HEAD BOLT INSERTED THROUGH THE FACE OF THE TUBE. HOLES IN POSTS SHALL BE 1/16" LARGER THAN THE BOLT SIZE.
9. HOLES IN RAILS FOR RAIL TUBE ATTACHMENT SHALL BE FIELD-DRILLED. HOLES SHALL BE COATED WITH AN APPROVED ZINC-RICH PAINT PRIOR TO ERECTION.
10. IF THERE IS A CONFLICT BETWEEN THE DETAILS SHOWN ON THIS SHEET AND THE DESIGN, THE REQUIREMENTS OF THE DESIGN DRAWINGS SHALL BE FOLLOWED.
11. ANY BENDING OF RAIL SHALL BE BY SHOP PROCEDURE ONLY.
12. THE FABICATOR SHALL SUBMIT SHOP DRAWINGS, INCLUDING WELDING PROCEDURES TO THE STRUCTURES SECTION FOR APPROVAL IN ACCORDANCE WITH SUBSECTION 506.04 OF THE STANDARD SPECIFICATIONS. ALL WELDING SHALL CONFORM WITH SUBSECTION 506.10.
13. RAIL POSTS AND BASE PLATES SHALL BE TESTED FOR IMPACT PROPERTIES IN ACCORDANCE WITH ASTM A-370 CHARPY IMPACT TESTING USING TYPE A SPECIMEN
14. EXPANSION JOINT HARDWARE, REFLECTORS AND REFLECTOR HARDWARE PROVIDED BY OTHERS.

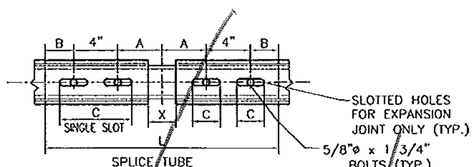

RAIL TUBE SPLICE AND RAIL EXPANSION JOINT DETAIL

SPLICE TABLE					
T	A	B	C	L	X
N/A	4"	2"	--	20"	3/4"
EXPANSION JOINT TABLE					
<4"	4"	2"	2 1/2"	20"	2 1/2"

T = TOTAL MOVEMENT BETWEEN BRIDGE EXPANSION JOINTS. SEE NOTE 5

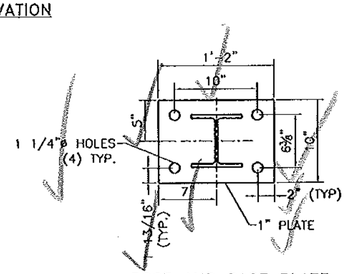

POST AND BASE PLATE

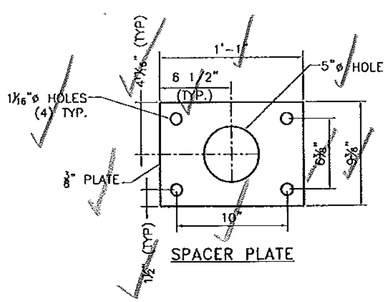

SPACER PLATE

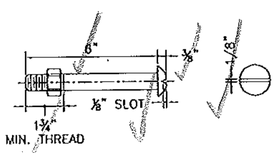

3/4" DIA. M164 (TYPE 1) ROUND HEAD BOLT

(WITH WASHER AND PREVAILING TORQUE TYPE LOCK NUT) (SEE NOTE #8)
ONLY FULL DIAMETER BODY BOLTS WILL BE ALLOWED.

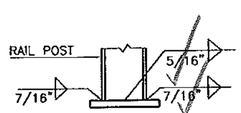

BASE WELD DETAIL

MATERIALS
RAIL TUBES.....ASTM A500, GRADE B OR ASTM A501
RAIL POSTS AND BASE PLATES.....ASTM A709/A709M, GRADE 50
AALL OTHER SHAPRE AND PLATES.....ASTM A709/A709M, GARDE 36
ANCHOR STUDS.....ASTM A449
ALL OTHER BOLTS (UNLESS NOTED).....AASHTO M164, TYPE1

NUTS FOR AASHTO M164 BOLTS AND FOR ANCHOR STUDS SHALL COMPLY WITH AASTHO M291 (ASTM A563).

WASHERS SHALL COMPLY WITH AASHTO M293 (ASTM F436) SPECIFCATIONS.

1/8" PAD SHALL COMPLY WITH STANDARD SPECIFICATION SUBSECTION 731.01 OR 731.02.

RECEIVED
CK'D BY SSS OK'D BY
MAY 0 5 2010
RESUBMIT APPROVED ✓
BY DATE 5/6/10

REVISIONS		
No.	Remarks	Date

HIGHWAY SAFETY CORP
GLASTONBURY, CT
860-633-9445

ITEM 525.33 BRIDGE RAILING - NETC 2 RAIL
US RT 2 OVER WINOOSKI RIVER
MORETOWN - MIDDLESEX, VERMONT
PROJECT NUMBER: BRS 0284(14)

NSC CERTIFIED FABRICATOR

GENERAL CONTRACTOR
SUB CONTRACTOR F.R. LAFAYETTE, INC.
NSC JOB NO. 1744
SHEET NO. 2 of X

DRAWN	CHECKED	DATE	SCALE	SIZE
MHM	PAR	5/4/2010	NONE	D

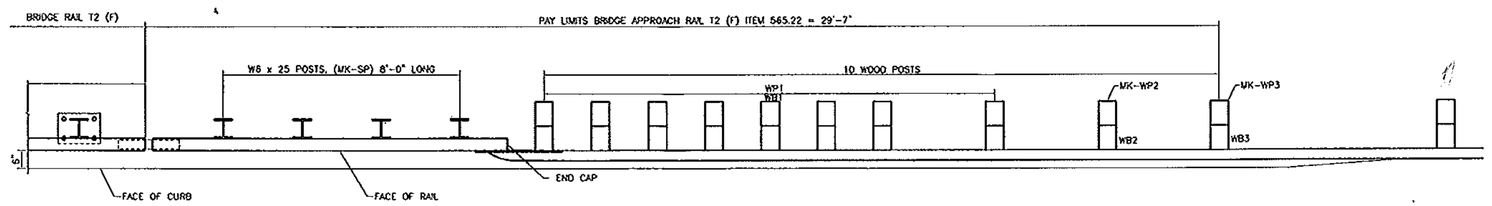

PLAN

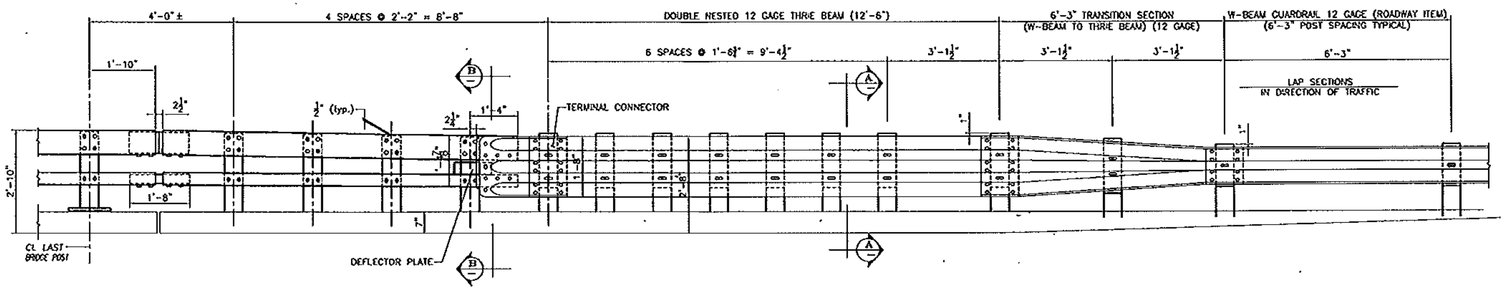

APPROACH RAIL ELEVATION

(TOTAL LIMIT ITEM 565.22 = 118.5 LF)

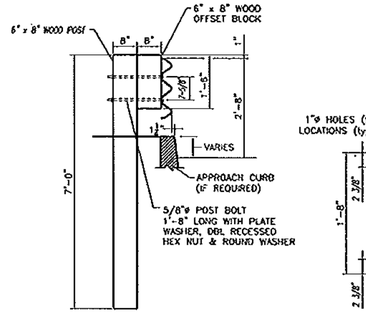

SECTION A-A

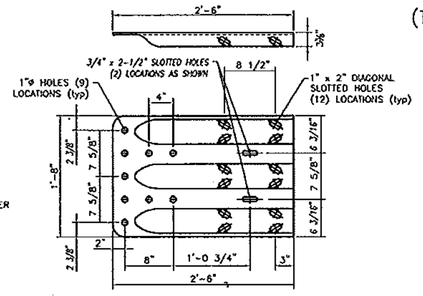

TERMINAL CONNECTOR

10 GAUGE (AASHTO M180 B2)

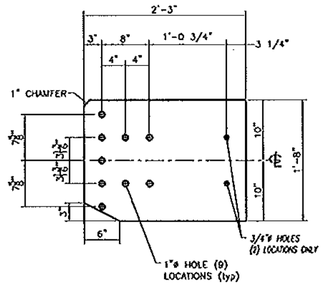

CONNECTION PLATE

3/8" x 1'-8" x 2'-3" (A709 gr 36)

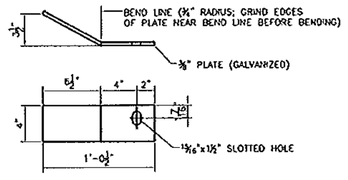

DEFLECTOR PLATE

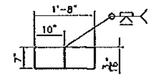

ANGLED RAIL TUBE
SPLICE DETAIL

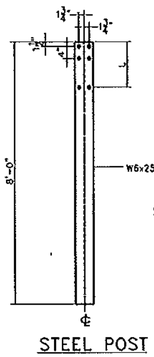

STEEL POST

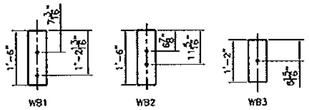

WOOD BLOCK DETAILS

STEEL POST CHART

No.	L
#1	1'-3.813"
#2	1'-3.500"
#3	1'-3.188"
#4	1'-2.438"

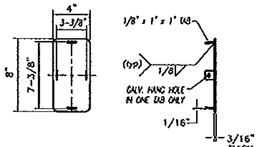

END CAP (8x4)

3/16" x 8" x 4" (A709 gr 36)

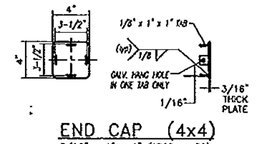

END CAP (4x4)

3/16" x 4" x 4" (A709 gr 36)

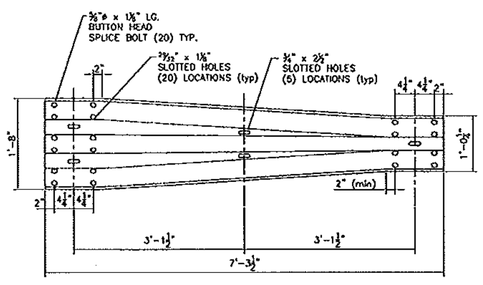

THRIE TRANSITION PANEL

12 GAUGE (AASHTO M180 A2)

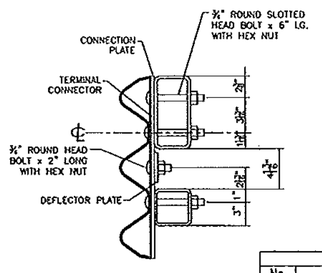

SECTION B-B

BILL OF MATERIAL (4 APPROACHES)

MK.	Qty.	Description	Size/Shape	Length	Material
M10	2	UPPER APPROACH RAIL	TS 8x4x0.313"	9'-9.500"	A500 Gr. B
	2	LOWER APPROACH RAIL	TS 4x4x0.25"	9'-9.500"	A500 Gr. B
M11	2	SHOP CURVED UPPER RAIL	TS 8x4x0.313"	9'-9.500"	A500 Gr. B
	2	SHOP CURVED LOWER RAIL	TS 4x4x0.25"	9'-9.500"	A500 Gr. B
M12	2	SHOP CURVED UPPER RAIL	TS 8x4x0.313"	9'-9.500"	A500 Gr. B
	2	SHOP CURVED LOWER RAIL	TS 4x4x0.25"	9'-9.500"	A500 Gr. B
SP	16	STEEL POST	W6 x 25	8'-0"	A572 Gr. 50
WP1	32	WOOD POST	6" x 8"	7'-0"	TIMBER
WP2	4	WOOD POST	6" x 8"	7'-0"	TIMBER
WP3	4	WOOD POST	6" x 8"	7'-0"	TIMBER
WB1	32	WOOD BLOCK	6" x 8"	1'-6"	TIMBER
WB2	4	WOOD BLOCK	6" x 8"	1'-6"	TIMBER
WB3	4	WOOD BLOCK	6" x 8"	1'-2"	TIMBER
	4	SPLICE TUBE FOR TS 8x4x0.313"			
	4	TUBE	TS 7x3x0.375"	1'-8"	A500 Gr. B
	8	WELDED LOCK NUTS	0.625"ø	---	A563 Gr. A
	4	ANGLED SPLICE TUBE FOR TS 4x4x0.250"			
	4	TUBE	TS 3x3x0.313"	1'-8"	A500 Gr. B
	8	WELDED LOCK NUTS	0.625"ø	---	A563 Gr. A
	4	TERMINAL CONNECTOR	10 Ga.	2'-6"	M180
	4	CONNECTION PLATE	0.375" x 1'-8"	2'-3"	A709 Gr. 36
	4	END CAP FOR TS 8x4 RAIL TUBE			
	4	PLATE	0.188" x 4"	8"	A709 Gr. 36
	16	PLATE	0.125" x 1"	1"	A709 Gr. 36
	4	END CAP FOR TS 4x4 RAIL TUBE			
	4	PLATE	0.188" x 4"	4"	A709 Gr. 36
	8	PLATE	0.125" x 1"	1"	A709 Gr. 36
	2	DEFLECTOR PLATE (LEFT)	0.375"x4"	125"	A709 Gr. 36
	2	DEFLECTOR PLATE (RIGHT)	0.375"x4"	125"	A709 Gr. 36
	8	0.75"ø x 2" LG. ROUND HEAD BOLT W/NUT			A307
	4	THRIE TRANSITION PANEL	12 Ga.	7'-3.50"	M180 A2
	4	THRIE BEAM	12 Ga.	12'-6"	M180 A2
	92	0.756 x 6" ROUND HEAD BOLT W/NUT & ROUND WASHER			A325
	76	0.625"ø x 20" LG. POST BOLT W/DBL RECESSED NUT, PLATE & ROUND WASHER			A307
	32	0.625"ø x 1.75" LG. CAP SCREW W/WASHER			A307
	128	0.625"ø x 1.25" LG. PANEL SPLICE BOLT W/DBL RECESSED NUT			A307
	32	0.75" x 0.5" LG. (SCH 40) SPACER PIPE			A53

NOTES:

1. PAYMENT FOR GUARDRAIL APPROACH SECTION – METC 2 RAIL SHALL INCLUDE THE TERMINAL CONNECTOR, THE CONNECTION PLATE, THE DEFLECTOR PLATE, RAIL, POSTS, BLOCKS AND ATTACHMENT HARDWARE.
2. THE REFLECTORIZED ALUMINUM DELINEATION IS TO BE ERECTED EVERY 30' (OR CLOSEST POST) WITH A 3" DIAMETER BOLT. DELINEATORS SHALL MEET SPECIFICATION REQUIREMENTS FOR ASTM B209 ALLOY 5052-H32.
3. ALL APPROACH RAIL SPLICES SHALL BE LAPPED IN THE DIRECTION OF TRAFFIC FLOW.
4. ALL APPROACH RAIL MATERIALS, DIMENSION SIZES AND NOTES SHALL BE THE SAME AS THOSE OF THE BRIDGE RAIL, UNLESS OTHERWISE NOTED.
5. APPROACH RAIL BOLTS SHALL BE ASTM A307 GRADE A AND NUTS SHALL BE AASHTO M291 (ASTM 563 GRADE A OR BETTER (GALVANIZED). WASHERS SHALL BE ASTM F844.
6. WELD TOP SPLICE BAR TO FIT BEND. USE COMPLETE PENETRATION WELD (B-U2).
7. NORTHWEST AND SOUTHWEST APPROACHES ARE SHOWN. NORTHEAST APPROACH TO BE SET ON 492' RADIUS AND SOUTHEAST APPROACH TO BE SET ON 462' RADIUS.
8. M11 TUBES FOR NORTHEAST APPROACH TO BE SHOP CURVED TO 492' CONCAVE RADIUS. M12 TUBES FOR SOUTHEAST APPROACH TO BE SHOP CURVED TO 462' CONVEX RADIUS.

RECEIVED

CK'D BY SSS OK'D BY

MAY 10 2010

RESUBMIT APPROVED ✓

BY DATE 5/11/10

REVISIONS

No.	Remarks	Date
0	Initial submittal	

HIGHWAY SAFETY CORP

GLASTONBURY, CT

860-633-9445

ITEM 565.22 BRIDGE APPROACH RAIL
US RT 2 OVER WINOOSKI RIVER
MORETOWN – MIDDLESEX, VERMONT
PROJECT NUMBER: BRS 0284(14)

AASHTO CERTIFIED FABRICATOR

HSC JOB NO. 1744

SHEET NO. 3 of 3

GENERAL CONTRACTOR

SUB CONTRACTOR F.R. LAFAYETTE, INC.

DRAWN	CHECKED	DATE	SCALE	SIZE
MHM	PAR	5/10/10	NONE	D

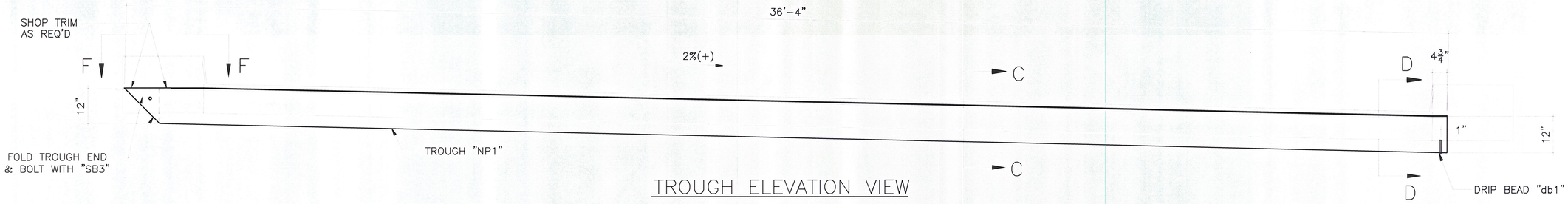

TROUGH ELEVATION VIEW

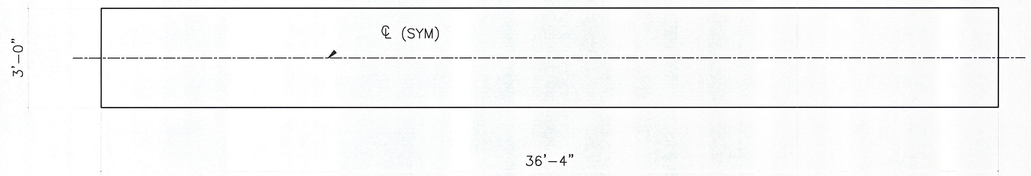

ONE REQ'D, TROUGH MARK "NP1"

5/32" THK. PREFORMED FABRIC TROUGH (3 PLY)

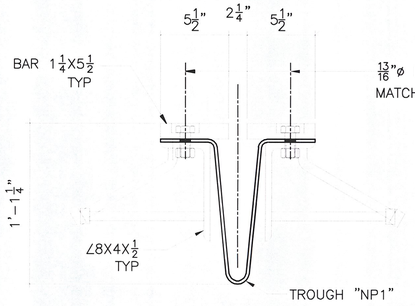

SECTION C–C

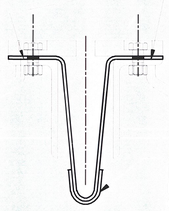

1/16"X3" MIN. BUTYL RUBBER TAPE
CENTERED ON LINE OF BOLTS
PLACED BETWEEN ANGLE & FABRIC

1/4"X7"
DRIP BEAD "db1"
PLACE 1" FROM END OF TROUGH.
CEMENT TO BOTTOM OF TROUGH
WITH APPROVED ADHESIVE

SECTION D–D

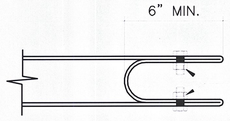

SECTION F–F

SEE DWG. 7 FOR B.O.M.

ERECTION BOLTS W/H.H.N.				WASHERS		FINISH
QUAN.	SIZE	LENGTH	TYPE	FLAT	BEV.	GALV. AASHTO M232

FINISH	HOT DIPPED GALVANIZED
MATERIAL	AASHTO M270 GR. 36
HOLES	AS NOTED
ELECTRODES	PER W.P.S.
WELDS	AS NOTED
SURFACE PREP	SSPC-SP8

FOR APPROVAL ONLY

NO	DATE	DESCRIPTION	BY

REVISIONS

RECEIVED
CK'T BY SSS DATE BY WPM
JAN 26 2010
RESUBMIT ____ APPROVED ✓
BY DATE 2/5/2010

ARC
ENGINEERING, INC.
ADVANCED RESOURCES & CONST. ENTERPRISES, INCORPORATED
P.O. BOX 120 KINGFIELD, ME. 04947
PHONE: (207) 265-2646 – FAX: (207) 265-4054

DRAFTER	JAC	TROUGH DETAILS	PROJECT NO.
DATE	1/8/10	VERMONT AGENCY OF TRANSPORTATION, TOWNS OF MORETOWN-MIDDLESEX, U.S. RTE. 2 MAJOR COLL.	BRS 0284(14)
CHECKED	MTD	G.C. WINTERSET, INC.	DWG. NO. 8
JOB	#09-200		

GENERAL NOTES

CONSTRUCTION SPECIFICATIONS

1) ALL MATERIAL AND WORKMANSHIP TO BE IN ACCORDANCE WITH THE STATE OF VERMONT AGENCY OF TRANSPORTATION STANDARD SPECIFICATIONS FOR CONSTRUCTION DATED 2006 WITH LATEST REVISIONS AND THE AASHTO LRFD BRIDGE CONSTRUCTION SPECIFICATIONS FOR HIGHWAY BRIDGES DATED 2006 AND ITS LATEST REVISIONS.

MATERIAL SPECIFICATIONS

1) UNLESS OTHERWISE NOTED, ALL STEEL TO BE UNPAINTED AASHTO M270 (ASTM A709) GRADE 50W.

2) MATERIAL NOTED "CVN" OR "H2-3" ON DETAIL DRAWINGS SHALL BE CHARPY V-NOTCH TESTED IN ACCORDANCE WITH THE REQUIREMENTS OF VERMONT STANDARD SPECIFICATIONS SECTION 714.

3) HIGH STRENGTH BOLTS: ASTM A325 7/8" DIAMETER, TYPE 3, IN 15/16" DIAMETER HOLES, UNLESS NOTED OTHERWISE. NUTS SHALL BE A563 (TYPE 3) GRADE C3. IN PAINTED AREAS, USE ASTM TYPE 1 (GALV PER AASHTO M232) BOLTS, NUTS AND WASHERS.

   BOLTS & NUTS SHALL BE ROTATIONAL CAPACITY TESTED. DO NOT MIX NUTS & BOLTS FROM DIFFERENT CONTAINERS UNLESS ALL BOLTS & NUTS HAVE THE SAME LOT NUMBER.

FABRICATION

1) ALL HOLES SHALL BE PUNCHED OR DRILLED FULL SIZE (UN).

WELDING

1) THE CONFIGURATION OF THE WELD JOINTS AND ALL WELDING PROCEDURES SHALL BE IN ACCORDANCE WITH AASHTO/AWS D1.5-02 BRIDGE WELDING CODE AND IN ADDITION TO SPECIFICATIONS SHOWN ABOVE. ALL WELDING WILL BE DETAILED TO PRE-QUALIFIED JOINTS, UNLESS PROHIBITED BY THE DESIGNER.

2) WELDING OF MAIN LOAD CARRYING MEMBERS AND ATTACHMENTS SHALL BE PERFORMED USING THE AUTOMATIC SUBMERGED ARC & SHIELDED METAL ARC PROCESSES. ALL WELDS ARE CONTINUOUS U.N.

3) NON DESTRUCTIVE TESTING OF WELDS SHALL BE IN ACCORDANCE WITH THE REFERENCED SPECIFICATION.

4) SEE DETAIL "WS1" & "WS2" ON THIS DRAWING FOR WELD TERMINATION DETAIL.

FIELD CONNECTIONS

1) ALL FIELD CONNECTIONS SHALL BE MADE WITH 7/8" DIAMETER HIGH STRENGTH A-325 BOLTS (UN), INSTALLED PER SECTION 506.19(c). SEE DWG E1 FOR FIELD BOLT SIZES.

2) BOLTS SHALL HAVE HEAVY HEX NUT, HEAVY HEX HEAD, AND AT LEAST ONE FLAT WASHER EACH. WASHER TO BE PLACED UNDER TURNED ELEMENT.

3) PIECE MARKS WILL BE LOCATED AS SHOWN ON ERECTION DRAWINGS.

CLEANING

1) ALL STEEL SHALL BE BLAST CLEANED IN ACCORDANCE WITH SSPC SP-10.

PAINTING

1) THE GIRDER ENDS & ABUTMENT CROSSFRAMES WITHIN 10'-0 OF THE ENDS OF STEEL AT ABUT 1 & ABUT 2 SHALL BE PAINTED, EXCEPT AS NOTED (SEE SKETCH "P1").

2) THE PAINT SYSTEM AND ITS APPLICATION SHALL CONFORM TO SECTION 513 OF THE STANDARD SPECIFICATIONS.

   THE PAINT SYSTEM SHALL BE AS FOLLOWS:
   PRIMER: CARBOLINE 859 ORGANIC ZINC RICH PRIMER ~ 3.0 - 5.0 MILS DFT.
   INTERMEDIATE: CARBOLINE 888 EPOXY ~ 4.0 - 6.0 MILS DFT.
   TOPCOAT: CARBOLINE 133 HB ALIPHATIC POLYURETHANE ~ 2.0 - 4.0 MILS DFT.

   TOP COAT COLOR: DARK BROWN FED COLOR #20059

3) PRIME COAT ONLY WITHIN 3" OF ALL HOLES WITHIN THE PAINTED AREA.

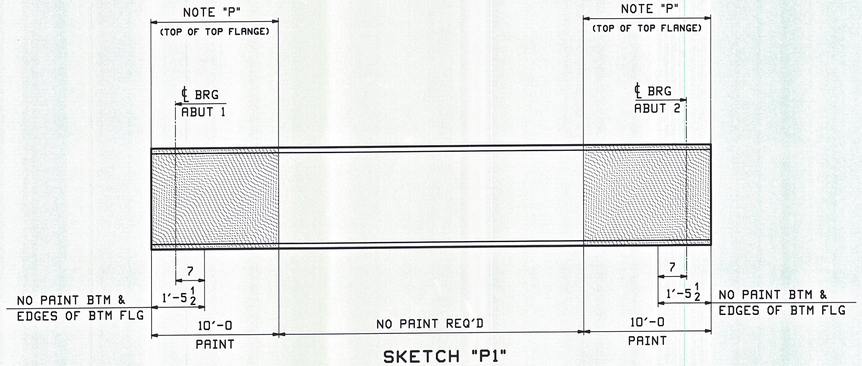

SKETCH "P1"

NOTE "P"
PAINT WITH A LIGHT RUST-PREVENTATIVE COAT OF PRIMER (SEE SECTION "P1")

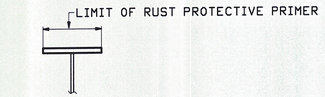

TYPICAL SECTION "P1"

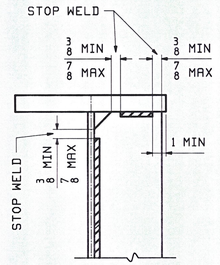

DETAIL "WS1"

STIFFENER WELD TERMINATION

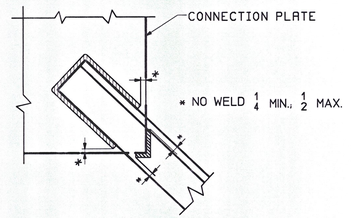

DETAIL "WS2"

CROSSFRAME WELD TERMINATION

NOTE TO ENGINEER:
THESE NOTES ARE NOT INTENDED TO BE ALL INCLUSIVE AND COMPLIANCE WITH RELEVANT SPECIFICATIONS REMAIN UNCHANGED.

REV.	DATE	REMARKS	DWN	CHK	APVL	SHOP
					NOV 0 2 2009	
0					AUG 2 7 2009	

MATERIAL:	SURFACE PREP. & PAINT:	HOLES:	SHOP BOLTS:
M270-50W		AS NOTED	AS NOTED

DESCRIPTION: GENERAL NOTES

CASCO BAY STEEL STRUCTURES, INC.
75 SPRING HILL ROAD SACO, MAINE 04072
PHONE (207) 282-7360 FAX. (207) 282-1179
TENSOR 2006

STRUCTURE: US RTE 2 OVER WINOOSKI RIVER WASHINGTON COUNTY, VT	DRAWN: CRK	DATE: 08/05
	CHKD: RLA	DATE: 08/10
LOCATION: TOWNS OF MORETOWN ~ MIDDLESEX, VT	JOB NO.	DWG NO.
PROJ NO. BRS 0284(14)	421-1	GN1
CUSTOMER: WINTERSET INC.		REV. △

RECEIVED
CK'D BY SSS OK'D BY
NOV 05 2009
BY DATE 11/5/09

CRK Mon, Aug 24, 2009 03:07:07 PM J:\casco\jobs\2006\GN1.dgn

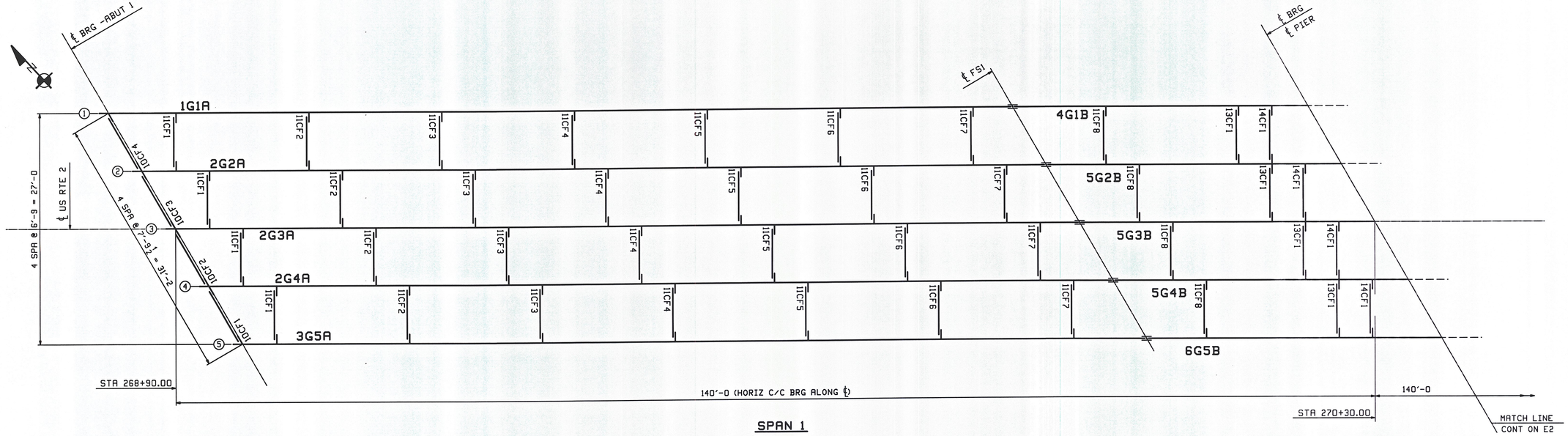

SPAN 1

FRAMING PLAN

WORK THIS SHEET WITH E2

REV.	DATE	REMARKS	DWN	CHK	APVL	SHOP
					NOV 0 2 2009	
0					AUG 2 7 2009	

MATERIAL:	SURFACE PREP. & PAINT:	HOLES:	SHOP BOLTS:
M270-50W		AS NOTED	AS NOTED

DESCRIPTION: FRAMING PLAN (SPAN 1)

CASCO BAY STEEL STRUCTURES, INC.
75 SPRING HILL ROAD SACO, MAINE 04072
PHONE (207) 282-7360 FAX. (207) 282-1179
TENSOR 2906

STRUCTURE: US RTE 2 OVER WINOOSKI RIVER WASHINGTON COUNTY, VT	DRAWN: TS	DATE: 08/18
	CHKD: PCP	DATE: 08/19
LOCATION: TOWNS OF MORETOWN ~ MIDDLESEX, VT	JOB NO.	DWG NO.
PROJ NO. BRS 0284(14)	421-1	E1
CUSTOMER: WINTERSET INC.		REV. △

RECEIVED
CK'D BY SSS CK'D BY MEM
NOV 05 2009
APPROVED ✓
BY DATE 11/5/09

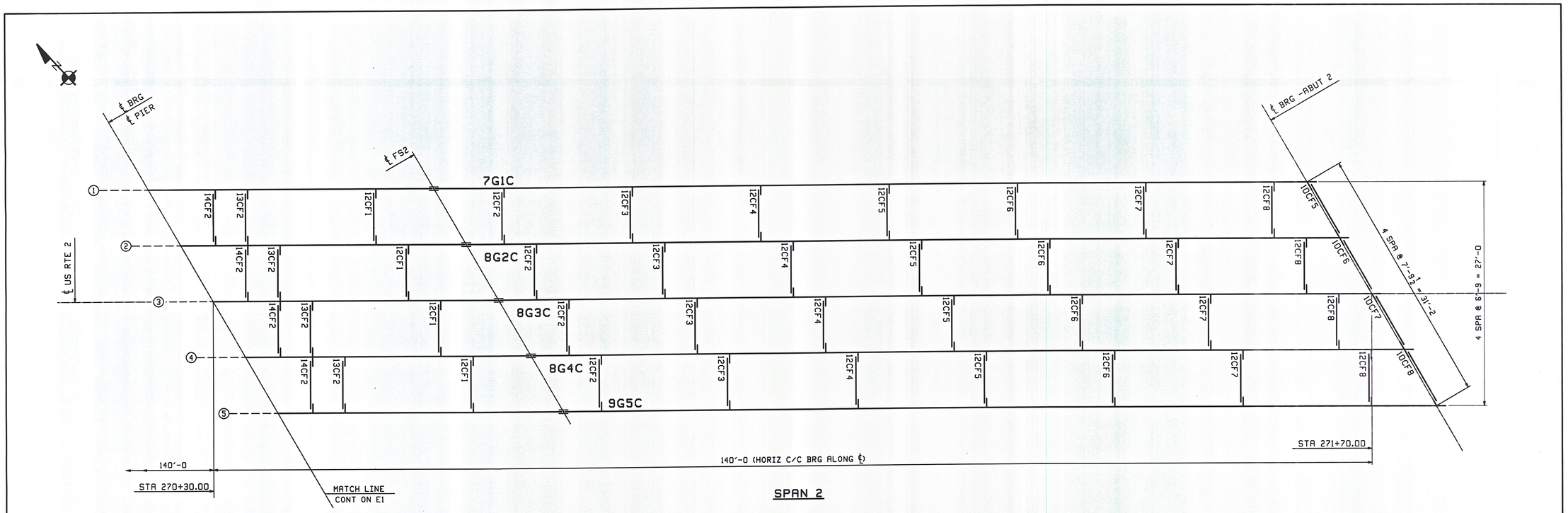

SPAN 2

FRAMING PLAN

FIELD BOLT LIST						A325 Type 3 BOLTS								
LINE	NO REQ'D.	BOLT DIAM.	BOLT LEN.	BOLTS /CONN.	# OF CONN.	GRIP	THICKNESS OF PCS. CONNECTED						WASH CODE	PIECES CONNECTED AND REMARKS
1														
2														FIELD SPLICE 1 & 2
3	720	7/8	3 3/4	72	10	2 1/4	5/8	1	5/8				1	TOP FLG SPLICE
4	1080	7/8	3 3/4	108	10	2 1/4	3/4	3/4	3/4				1	WEB SPLICE
5	720	7/8	3 3/4	72	10	2 1/4	5/8	1	5/8				1	BTM FLG SPLICE
6														
7														INT. CROSSFRAMES
8	1152	7/8	2 3/4	16	72	1 5/16	9/16	3/4					1	GUSS PL TO STIFF
9														

WASHER CODES

1: 1 Hard Flat Washer

FIELD BOLT LIST						A325 Type 1 BOLTS								MECH. GALV.
LINE	NO REQ'D.	BOLT DIAM.	BOLT LEN.	BOLTS /CONN.	# OF CONN.	GRIP	THICKNESS OF PCS. CONNECTED						WASH CODE	PIECES CONNECTED AND REMARKS
10														END & INT
11														CROSSFRAMES (PAINTED)
12	256	7/8	2 3/4	16	16	1 5/16	9/16	3/4					1	GUSS PL TO STIFF
13														

WASHER CODES

1: 1 Hard Flat Washer

FIELD BOLT SUMMARY			2% + 2 ADDED, MIN. 2 EXTRA			
LINE	NO. OF BOLTS	BOLT DIAM.	TYPE	BOLT LEN	ACTUAL COUNT	REMARKS
1	263	7/8	A325 Type 1	2 3/4	256	MECH GALVANIZED
2						
3	263	Hard Flat Washers	for 7/8 ø	BOLT		MECH GALVANIZED (F436)
4						
5						
6	1177	7/8	A325 Type 3	2 3/4	1152	
7	2572	7/8	A325 Type 3	3 3/4	2520	
8						
9	3749	Hard Flat Washers	for 7/8 ø	BOLT		(F436-3)
10						
11						
12						

WORK THIS SHEET WITH E1

REV.	DATE	REMARKS	DWN	CHK	APVL	SHOP
0					NOV 02 2009 / AUG 27 2009	

MATERIAL:	SURFACE PREP. & PAINT:	HOLES:	SHOP BOLTS:
M270-50W		AS NOTED	AS NOTED

DESCRIPTION: FRAMING PLAN (SPAN 2) & FIELD BOLTS

CASCO BAY STEEL STRUCTURES, INC.
75 SPRING HILL ROAD SACO, MAINE 04072
PHONE (207) 282-7360 FAX. (207) 282-1179
TENSOR 2906

STRUCTURE: US RTE 2 OVER WINOOSKI RIVER
WASHINGTON COUNTY, VT

DRAWN:	DATE:
TS	08/18
CHKD:	DATE:
PCP	08/19

LOCATION: TOWNS OF MORETOWN ~ MIDDLESEX, VT

PROJ NO. BRS 0284(14)

CUSTOMER: WINTERSET INC.

JOB NO.	DWG NO.
421-1	E2
	REV. △

RECEIVED
CK'D BY SSS CK'D BY MRM
NOV 05 2009
APPROVED ✓
BY DATE 11/5/09

PCP Thu, Aug 20, 2009 09:00:18 AM /users/jobs/2906/E2 - Rev0

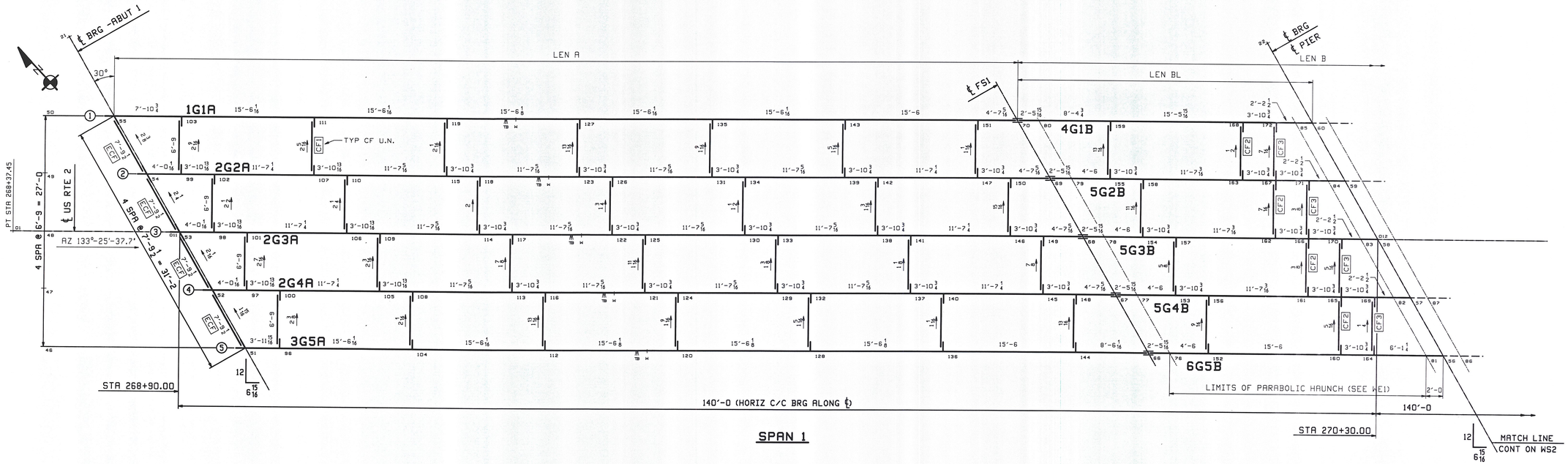

SPAN 1

CALCULATION PLAN

	LENGTHS ALONG TOP OF WEB			SLOPE	
Line	LEN A	LEN BL	LEN B	ABUT 1	PIER
1	105'-6 7/16	34'-5 7/8	68'-11 3/4	-.0054	-.0094
2	105'-6 1/2	34'-5 7/8	68'-11 3/4	-.0070	-.0110
3	105'-6 1/2	34'-5 7/8	68'-11 3/4	-.0086	-.0126
4	105'-6 1/2	34'-5 7/8	68'-11 3/4	-.0102	-.0142
5	105'-6 1/2	34'-5 15/16	68'-11 13/16	-.0118	-.0158

RECEIVED
CK'D BY SSS OK'D BY MPM
NOV 9 5 2009
BY
11/5/09

**** NOTE ****
THE PURPOSE OF THIS DRAWING IS TO COORDINATE GEOMETRIC CONTROL INFORMATION. THIS DWG IS SUBMITTED FOR INFORMATION ONLY AND IS NOT INTENDED FOR SHOP FABRICATION.

NOTES
1. LONGITUDINAL DIMENSIONS ARE SLOPING ALONG TOP OF WEB WITH CORRECTIONS MADE FOR VERTICAL CURVE, GRADE & DL CAMBER (UN).
2. TRANSVERSE DIMENSIONS ARE IN A HORIZ. PLANE (UN).
3. DROP ARROW POINTS TOWARDS LOW END OF MEMBER.
4. ENDS OF GIRDERS AND BRG. STIFF'S ARE VERTICAL AFTER DL ROTATION.
5. CF STIFF, INT STIFF & FIELD SPLICES ARE NORMAL TO GRADE.
6. BOTT PT NUMBERS =TOP PT NUMBERS + 300.
7. FOR LAYOUTS SEE 'TD' SHEETS.
8. COMBINE INT. CROSSFRAMES FOR DIFF IN DROPS OF +/- 1/8
9. CROSSFRAME DROPS ARE CALCULATED IN THEIR FINAL POSITION.

REV.	DATE	REMARKS	DWN	CHK	APVL	SHOP
						NOV 0 2 2009
0						AUG 2 7 2009

MATERIAL:	SURFACE PREP. & PAINT:	HOLES:	SHOP BOLTS:
M270-50W		AS NOTED	AS NOTED

DESCRIPTION: CALCULATION PLAN (SPAN 1)

CASCO BAY STEEL STRUCTURES, INC.
75 SPRING HILL ROAD SACO, MAINE 04072
PHONE (207) 282-7360 FAX. (207) 282-1179
TENSOR 2906

STRUCTURE: US RTE 2 OVER WINOOSKI RIVER WASHINGTON COUNTY, VT	DRAWN: WL	DATE: 08/05	
	CHK'D: RLA	DATE: 08/08	
LOCATION: TOWNS OF MORETOWN ~ MIDDLESEX, VT	JOB NO. 421-1	DWG NO. WS1	
PROJ NO. BRS 0284(14)		REV. △	
CUSTOMER: WINTERSET INC.			

MJF Wed, Aug 12, 2009 09:32:32 AM J:\stee\2004\2005\401 : Rev0

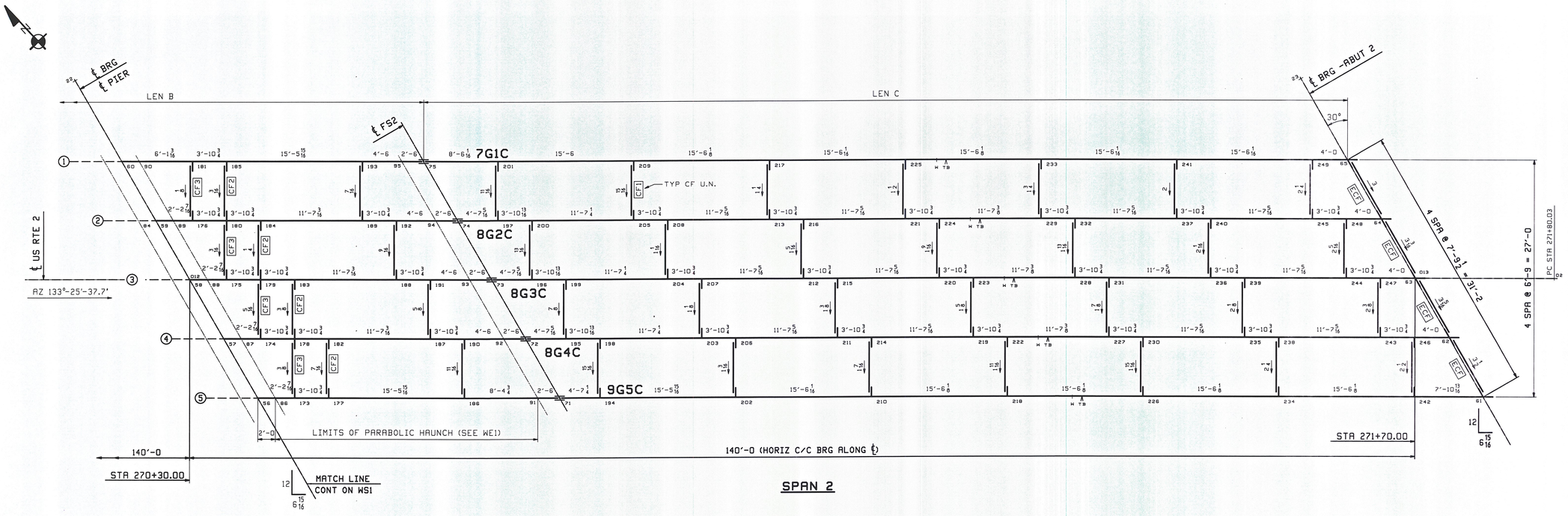

SPAN 2

CALCULATION PLAN

	LENGTHS ALONG TOP OF WEB		SLOPE	
Line	LEN B	LEN C	PIER	ABUT 2
1	68'-11 3/4	105'-6 1/2	-.0094	-.0133
2	68'-11 3/4	105'-6 1/2	-.0110	-.0150
3	68'-11 3/4	105'-6 1/2	-.0126	-.0166
4	68'-11 3/4	105'-6 1/2	-.0142	-.0182
5	68'-11 13/16	105'-6 9/16	-.0158	-.0198

RECEIVED
CK'D BY SSS OK'D BY mjem
NOV 9 5 2009
11/5/09

**** NOTE ****
THE PURPOSE OF THIS DRAWING IS TO COORDINATE GEOMETRIC CONTROL INFORMATION. THIS DWG IS SUBMITTED FOR INFORMATION ONLY AND IS NOT INTENDED FOR SHOP FABRICATION.

NOTES
1. LONGITUDINAL DIMENSIONS ARE SLOPING ALONG TOP OF WEB WITH CORRECTIONS MADE FOR VERTICAL CURVE, GRADE & DL CAMBER (UN).
2. TRANSVERSE DIMENSIONS ARE IN A HORIZ. PLANE (UN).
3. DROP ARROW POINTS TOWARDS LOW END OF MEMBER.
4. ENDS OF GIRDERS AND BRG. STIFF'S ARE VERTICAL AFTER DL ROTATION.
5. CF STIFF, INT STIFF & FIELD SPLICES ARE NORMAL TO GRADE.
6. BOTT PT NUMBERS =TOP PT NUMBERS + 300.
7. FOR LAYOUTS SEE "TD" SHEETS.
8. COMBINE INT. CROSSFRAMES FOR DIFF IN DROPS OF +/- 1/8
9. CROSSFRAME DROPS ARE CALCULATED IN THEIR FINAL POSITION.

REV.	DATE	REMARKS	DWN	CHK	APVL	SHOP
0					NOV 0 2 2009	
					AUG 9 7 2009	

MATERIAL:	SURFACE PREP. & PAINT:	HOLES:	SHOP BOLTS:
M270-50W		AS NOTED	AS NOTED

DESCRIPTION: CALCULATION PLAN (SPAN 2)

CASCO BAY STEEL STRUCTURES, INC.
75 SPRING HILL ROAD SACO, MAINE 04072
PHONE (207) 282-7360 FAX. (207) 282-1179
TENSOR 2506

STRUCTURE: US RTE 2 OVER WINOOSKI RIVER WASHINGTON COUNTY, VT	DRAWN: WL	DATE: 08/05
	CHK'D: RLA	DATE: 08/08
LOCATION: TOWNS OF MORETOWN ~ MIDDLESEX, VT	JOB NO. 421-1	DWG NO. WS2
PROJ NO. BRS 0284(14)		REV. △
CUSTOMER: WINTERSET INC.		

M:\F Wed Aug 26 2009 09:14:08 AM J:\stress\jobs\2006\421-1 Rev0

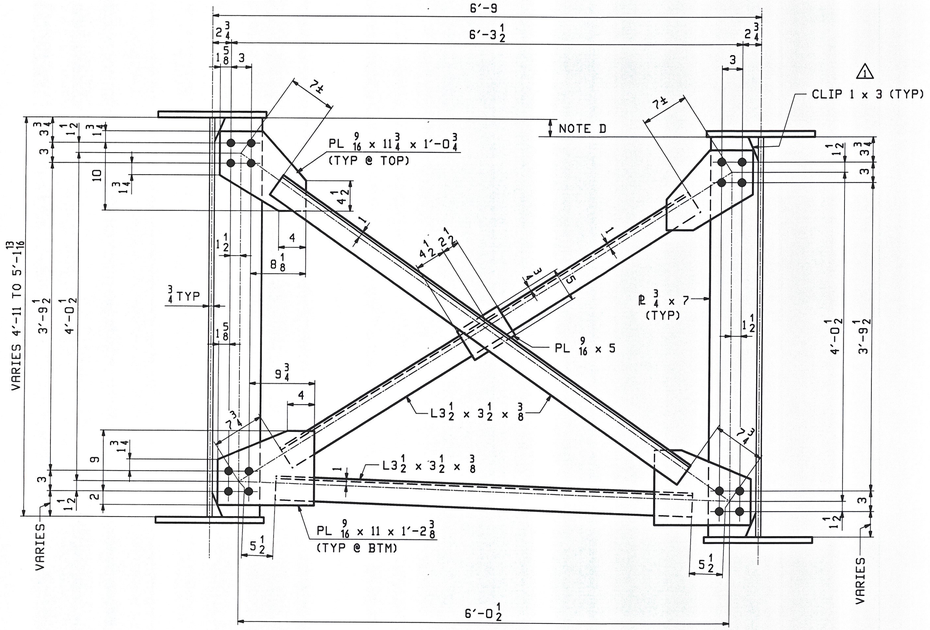

TYPE "CF1" INT CROSSFRAME @ DEPTH RANGE OF 4'-11 TO 5'-1 13/16

(LOOKING UP STATION)

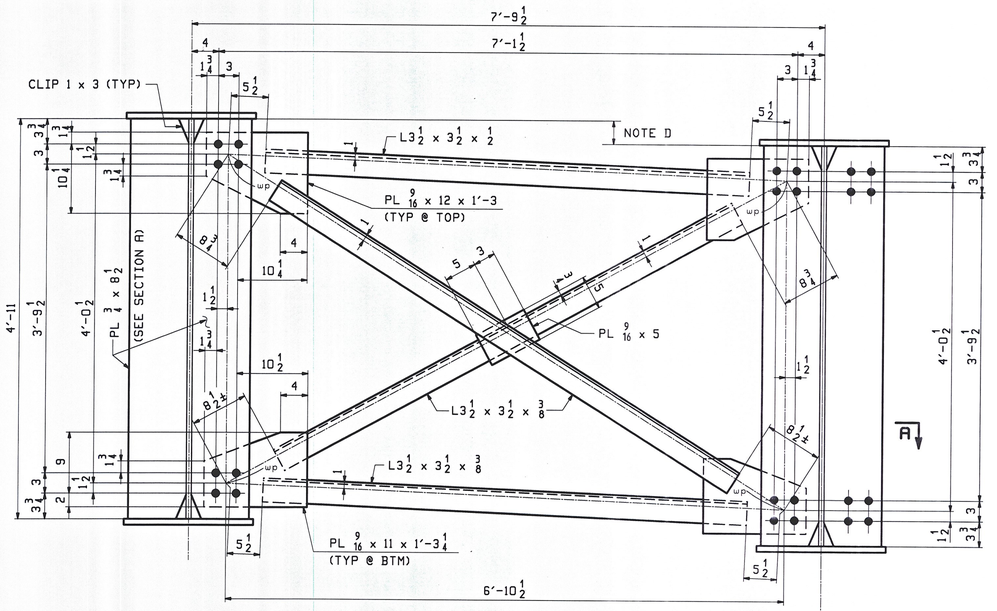

TYPICAL END CROSSFRAME - TYPE "ECF"

(LOOKING TOWARD BACKWALL)

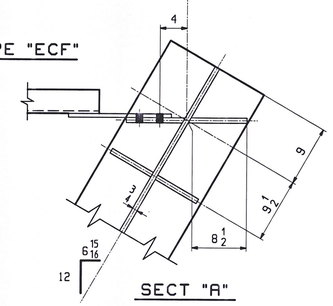

SECT "A"

RECEIVED
CK'D BY SSS CK'D BY MEM
NOV 9 5 2009
11/5/09

NOTE D:
DROP VARIES IN MAGNITUDE AND DIRECTION.
SEE "WS" SHEETS.

NOTES:

MATERIAL: AASHTO M270-50W

BOLTS: 7/8 ø HSB - A325

HOLES: 15/16 ø

**** NOTE ****
THE PURPOSE OF THIS DRAWING IS TO COORDINATE GEOMETRIC CONTROL INFORMATION AND CONNECTION SPACING. THIS DWG IS SUBMITTED FOR INFORMATION ONLY & IS NOT INTENDED FOR SHOP FABRICATION. DETAIL DWGS WILL SHOW ALL WELDING AND DIMENSIONS REQ'D FOR FABRICATION.

SCALE 1.25" = 1.0'

REV.	DATE	REMARKS	DWN	CHK	APVL	SHOP
1	10/19	REVISED PER APPROVAL	WJF	PCP	NOV 0 2 2009	
0					AUG 7 2009	

MATERIAL: M270-50W	SURFACE PREP. & PAINT:	HOLES: AS NOTED	SHOP BOLTS: AS NOTED

DESCRIPTION: CROSSFRAME LAYOUTS

CASCO BAY STEEL STRUCTURES, INC.
75 SPRING HILL ROAD SACO, MAINE 04072
PHONE (207) 282-7360 FAX. (207) 282-1179
TENSOR 2906

STRUCTURE: US RTE 2 OVER WINOOSKI RIVER WASHINGTON COUNTY, VT	DRAWN: WL/CRK	DATE: 08/05
	CHKD: RLA	DATE: 08/08
LOCATION: TOWNS OF MORETOWN ~ MIDDLESEX, VT	JOB NO.	DWG NO.
PROJ NO. BRS 0284(14)	421-1	TD1
CUSTOMER: WINTERSET INC.		REV. 1

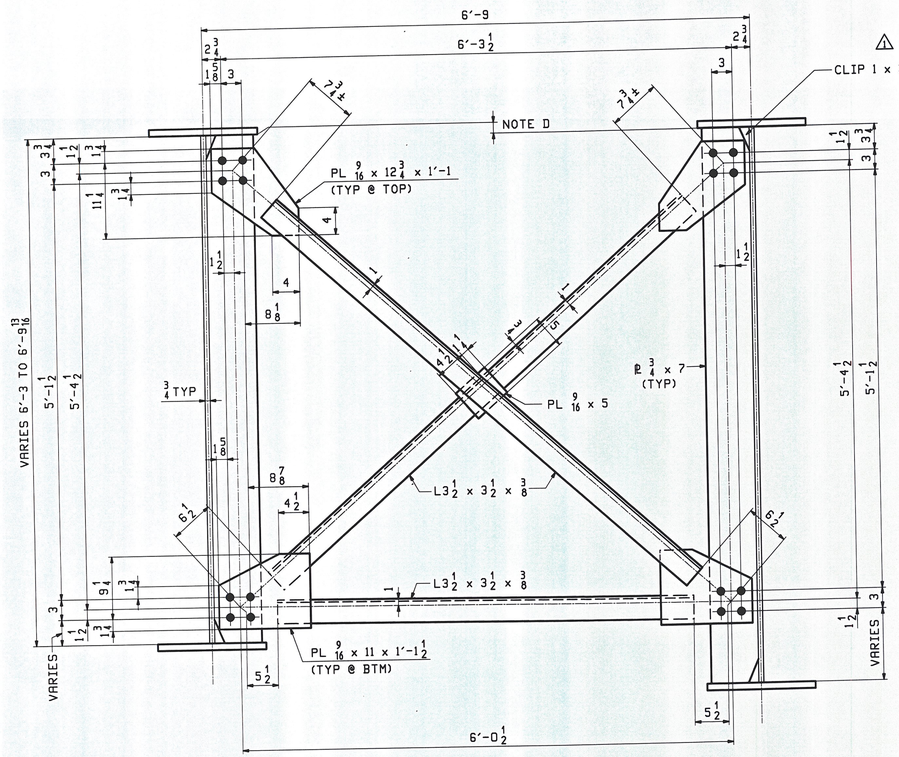

TYPE "CF2" INT CROSSFRAME @ DEPTH RANGE OF 6'-3 TO 6'-9 13/16

(LOOKING UP STATION)

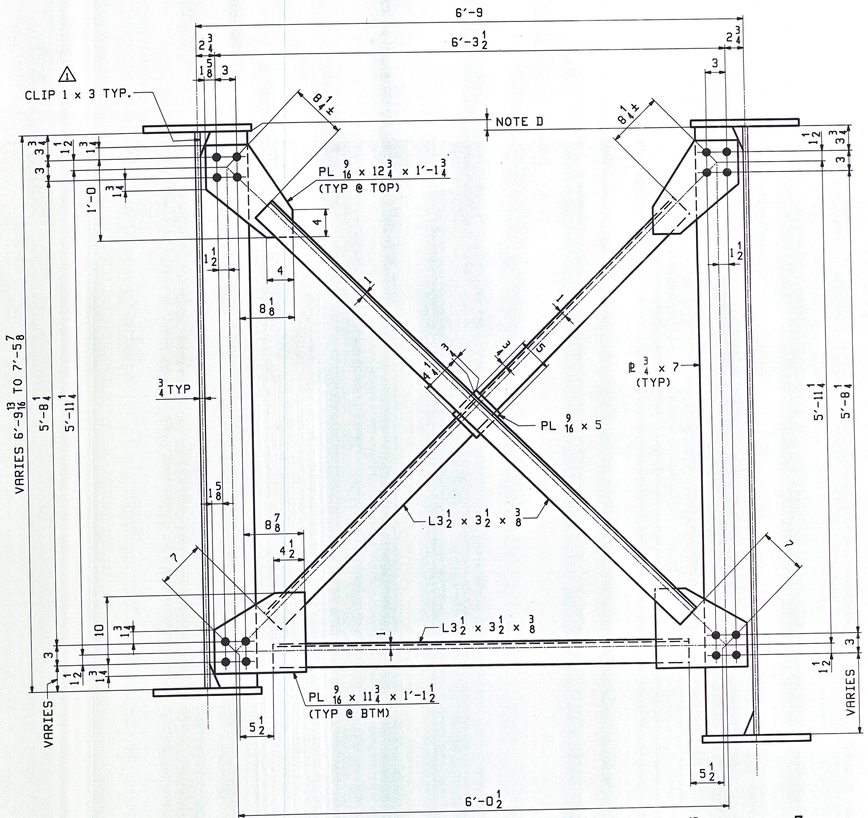

TYPE "CF3" INT CROSSFRAME @ DEPTH RANGE OF 6'-9 13/16 TO 7'-5 7/8

(LOOKING UP STATION)

RECEIVED
OK'D BY SSS OK'D BY MEM
NOV 9 5 2009
11/5/09

NOTE D:
DROP VARIES IN MAGNITUDE AND DIRECTION.
SEE "WS" SHEETS.

NOTES:

MATERIAL: AASHTO M270-50W

BOLTS: 7/8 ø HSB - A325

HOLES: 15/16 ø

**** NOTE ****
THE PURPOSE OF THIS DRAWING IS TO COORDINATE GEOMETRIC CONTROL INFORMATION AND CONNECTION SPACING. THIS DWG IS SUBMITTED FOR INFORMATION ONLY & IS NOT INTENDED FOR SHOP FABRICATION. DETAIL DWGS WILL SHOW ALL WELDING AND DIMENSIONS REQ'D FOR FABRICATION.

SCALE 1.25" = 1.0'

REV.	DATE	REMARKS	DWN	CHK	APVL	SHOP
1	10/19	REVISED PER APPROVAL	WJF	PCP	NOV 0 2 2009	
0					AUG 7 2009	

MATERIAL:	SURFACE PREP. & PAINT:	HOLES:	SHOP BOLTS:
M270-50W		AS NOTED	AS NOTED

DESCRIPTION: CROSSFRAME LAYOUTS

CASCO BAY STEEL STRUCTURES, INC.
75 SPRING HILL ROAD SACO, MAINE 04072
PHONE (207) 282-7360 FAX. (207) 282-1179
TENSOR 2906

STRUCTURE: US RTE 2 OVER WINOOSKI RIVER WASHINGTON COUNTY, VT	DRAWN: WJF	DATE: 08/11
	CHKD: RLA	DATE: 08/11
LOCATION: TOWNS OF MORETOWN ~ MIDDLESEX, VT	JOB NO.	DWG NO.
PROJ NO. BRS 0284(14)	421-1	TD2
CUSTOMER: WINTERSET INC.		REV. 1

PCP Mon, Oct 19, 2009 09:48:15 AM /users/jobs/2906/TD2 : Rev1

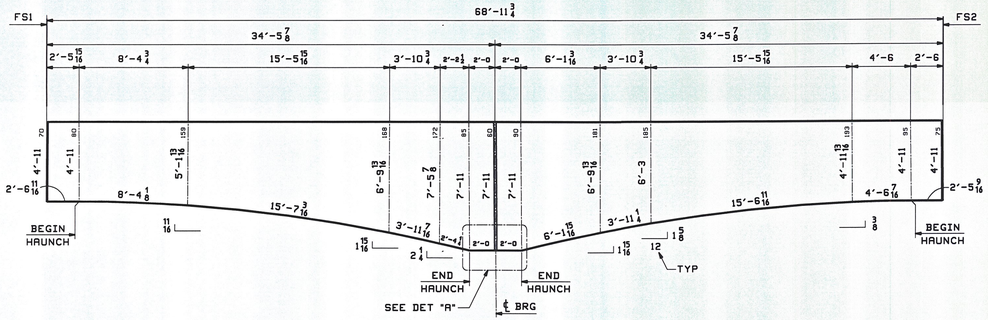

WEB ELEVATION - 4G1B

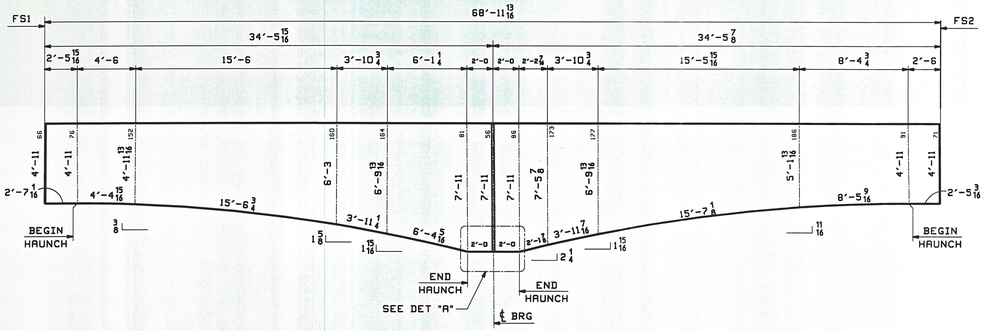

WEB ELEVATION - 6G5B

WEB ELEVATION - 5G2B, 5G3B & 5G4B

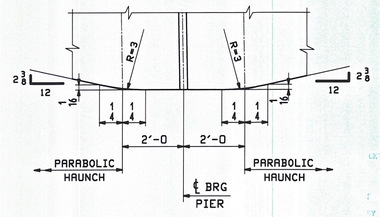

DETAIL "A"

RECEIVED
OKD BY SSS OKD BY MFM
NOV 9522
4/5/09

** NOTE **
THE PURPOSE OF THIS DRAWING IS TO COORDINATE GEOMETRIC CONTROL INFORMATION. THIS DWG IS SUBMITTED FOR INFORMATION ONLY AND IS NOT INTENDED FOR SHOP FABRICATION.

REV.	DATE	REMARKS	DWN	CHK	APVL	SHOP
					MAY 0 2 2009	
0					AUG 2 7 2009	

MATERIAL:	SURFACE PREP. & PAINT:	HOLES:	SHOP BOLTS:
M270-50W		AS NOTED	AS NOTED

DESCRIPTION: HAUNCH GIRDER WEB ELEVATION

CASCO BAY STEEL STRUCTURES, INC.
75 SPRING HILL ROAD SACO, MAINE 04072
PHONE (207) 282-7360 FAX. (207) 282-1179
TENSOR 2906

STRUCTURE: US RTE 2 OVER WINOOSKI RIVER WASHINGTON COUNTY, VT	DRAWN: CRK	DATE: 08/05
	CHKD: RLA	DATE: 08/08
LOCATION: TOWNS OF MORETOWN ~ MIDDLESEX, VT	JOB NO. 421-1	DWG NO. WE1
PROJ NO. BRS 0284(14)		REV. △
CUSTOMER: WINTERSET INC.		

BLK Wed, Aug 12, 2009 11:33:25 AM J:\work\2009\2905\WE1.dwg

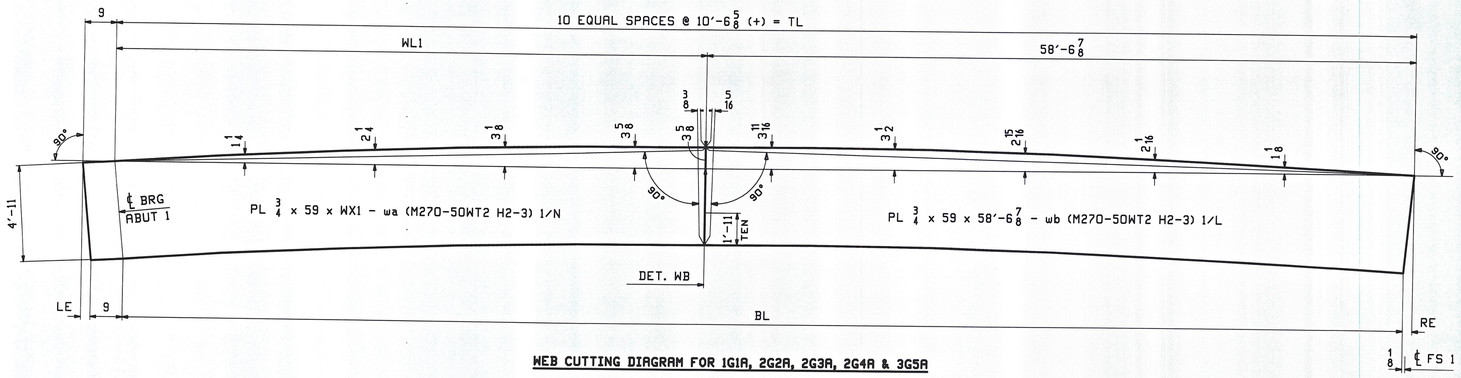

WEB CUTTING DIAGRAM FOR 1G1A, 2G2A, 2G3A, 2G4A & 3G5A

MARK	TL	BL	LE	RE	WL1	WX1
1G1A	105'-6 5/16	105'-4 13/16	15/16	9/16	46'-11 7/16	47'-8 7/16
2G2A	105'-6 3/8	105'-4 5/8	1 1/8	5/8	46'-11 1/2	47'-8 1/2
2G3A	105'-6 3/8	105'-4 5/8	1 1/8	5/8	46'-11 1/2	47'-8 1/2
2G4A	105'-6 3/8	105'-4 5/8	1 1/8	5/8	46'-11 1/2	47'-8 1/2
3G5A	105'-6 3/8	105'-4 1/2	1 5/16	9/16	46'-11 1/2	47'-8 1/2

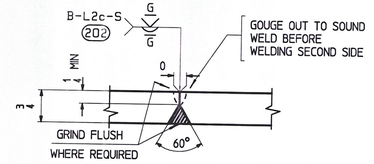

WEB PLATE SPLICE DETAIL "WB"

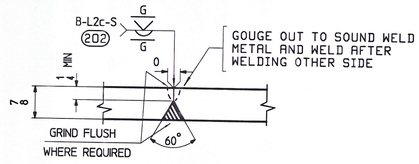

FLANGE SPLICE DETAIL "FA"

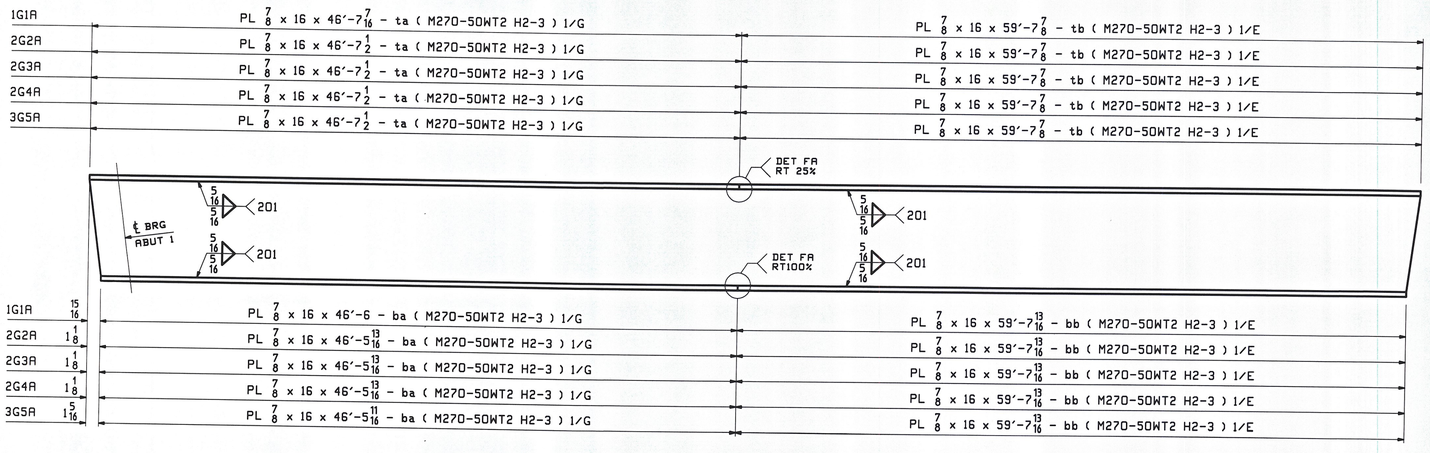

FLANGE DIAGRAM FOR 1G1A, 2G2A, 2G3A, 2G4A & 3G5A

NOTES:
- FOR GENERAL SHOP NOTES SEE DRAWING GN1
- H2-3 INDICATES PLATES THAT REQUIRE CHARPY V-NOTCH TEST AT H FREQUENCY FOR ZONE 2
- RT INDICATES RADIOGRAPHIC TESTING REQUIRED
- ALL MATERIALS AASHTO M270-GR50W

REV.	DATE	REMARKS	DWN	CHK	APVL	SHOP
0					NOV 02 2009 AUG 27 2009	

MATERIAL:	SURFACE PREP. & PAINT:	HOLES:	SHOP BOLTS:
	SEE GN1	AS NOTED	AS NOTED

DESCRIPTION: CAMBER & FLANGE DIAGRAMS

CASCO BAY STEEL STRUCTURES, INC.
75 SPRING HILL ROAD SACO, MAINE 04072
PHONE (207) 282-7360 FAX. (207) 282-1179
TENSOR 2906

STRUCTURE: US RTE 2 OVER WINOOSKI RIVER WASHINGTON COUNTY, VT	DRAWN: CRK	DATE: 08/05
	CHKD: RLA	DATE: 08/10
LOCATION: TOWNS OF MORETOWN ~ MIDDLESEX, VT	JOB NO. 421-1	DWG NO. C1
PROJ NO. BRS 0284(14)		REV. △
CUSTOMER: WINTERSET INC.		

RECEIVED
VTRANS 555 DKN BY MJM
NOV 9 '09
11/5/09

MJF Wed, Aug 12, 2009 09:53:31 AM J:\stex\284rt25\GN1.dgn

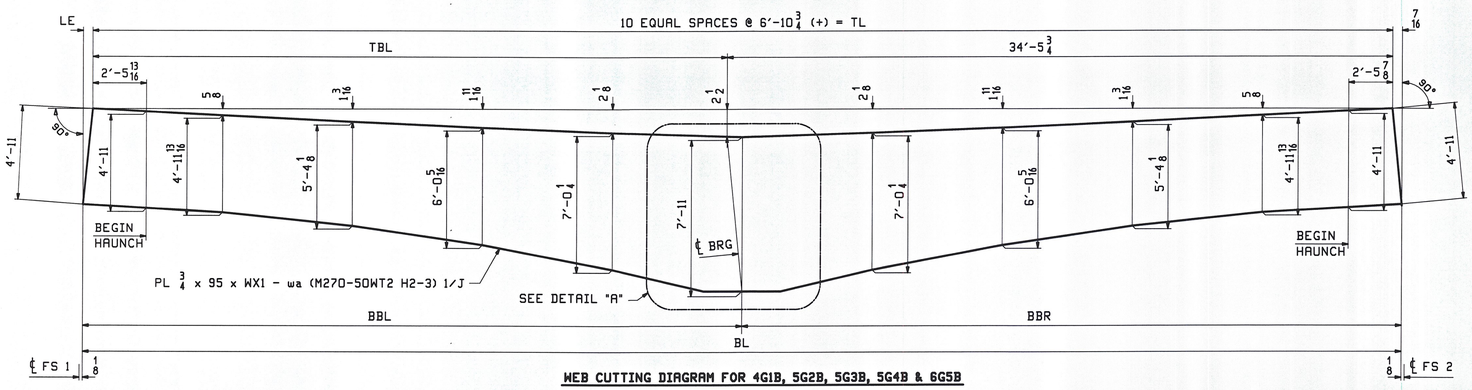

WEB CUTTING DIAGRAM FOR 4G1B, 5G2B, 5G3B, 5G4B & 6G5B

MARK	TL	BL	LE	WX1	TBL	BBL	BBR
4G1B	68'-11 1/2	69'-0 3/8	7/16	69'-0 3/8	34'-5 3/4	34'-7 1/16	34'-5 5/16
5G2B	68'-11 1/2	69'-0 7/16	1/2	69'-0 7/16	34'-5 3/4	34'-7 7/16	34'-5
5G3B	68'-11 1/2	69'-0 7/16	1/2	69'-0 7/16	34'-5 3/4	34'-7 7/16	34'-5
5G4B	68'-11 1/2	69'-0 7/16	1/2	69'-0 7/16	34'-5 3/4	34'-7 7/16	34'-5
6G5B	68'-11 9/16	69'-0 7/16	7/16	69'-0 7/16	34'-5 13/16	34'-7 3/4	34'-4 11/16

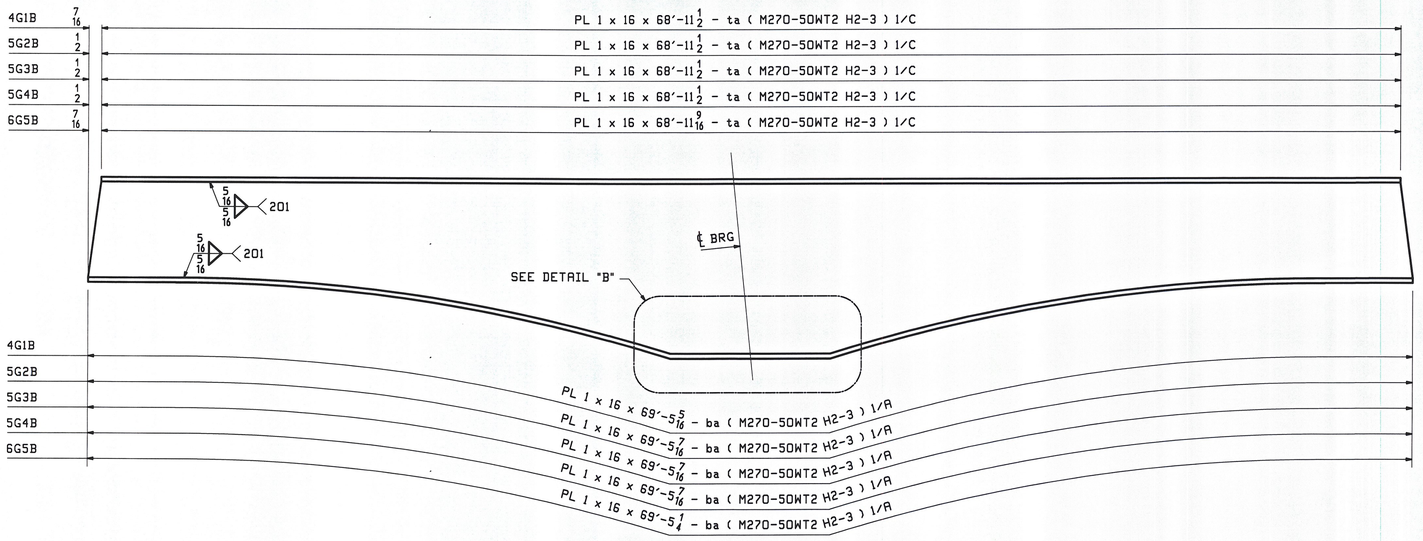

FLANGE DIAGRAM FOR 4G1B, 5G2B, 5G3B, 5G4B & 6G5B

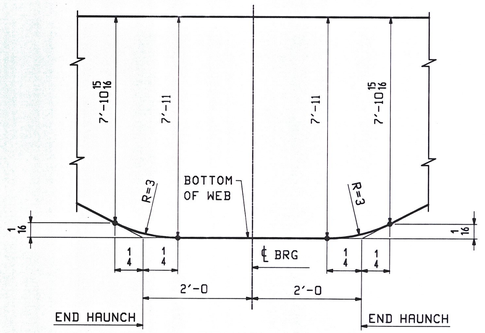

DETAIL "A"

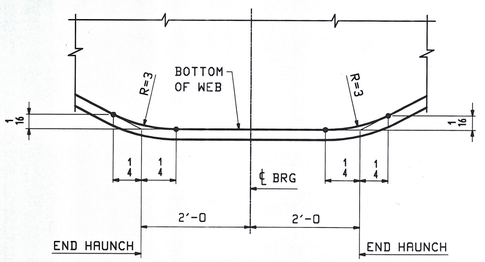

DETAIL "B"

NOTES:
- FOR GENERAL SHOP NOTES SEE DRAWING GN1
- H2-3 INDICATES PLATES THAT REQUIRE CHARPY V-NOTCH TEST AT H FREQUENCY FOR ZONE 2
- ALL MATERIALS AASHTO M270-GR50W

REV.	DATE	REMARKS	DWN	CHK	APVL	SHOP
0					NOV 0 2 2009 AUG 2 7 2009	

MATERIAL:	SURFACE PREP. & PAINT:	HOLES:	SHOP BOLTS:
M270-50W	SEE GN1	AS NOTED	AS NOTED

DESCRIPTION: CAMBER & FLANGE DIAGRAMS

CASCO BAY STEEL STRUCTURES, INC.
75 SPRING HILL ROAD SACO, MAINE 04072
PHONE (207) 282-7360 FAX. (207) 282-1179
TENSOR 2906

STRUCTURE: US RTE 2 OVER WINOOSKI RIVER WASHINGTON COUNTY, VT	DRAWN: CRK	DATE: 08/05
	CHKD: RLA	DATE: 08/10
LOCATION: TOWNS OF MORETOWN ~ MIDDLESEX, VT	JOB NO.	DWG NO.
PROJ NO. BRS 0284(14)	421-1	C2
CUSTOMER: WINTERSET INC.		REV. △

RECEIVED
CK'D BY SSS CK'D BY MEM
NOV 9 5 2009
11/5/09

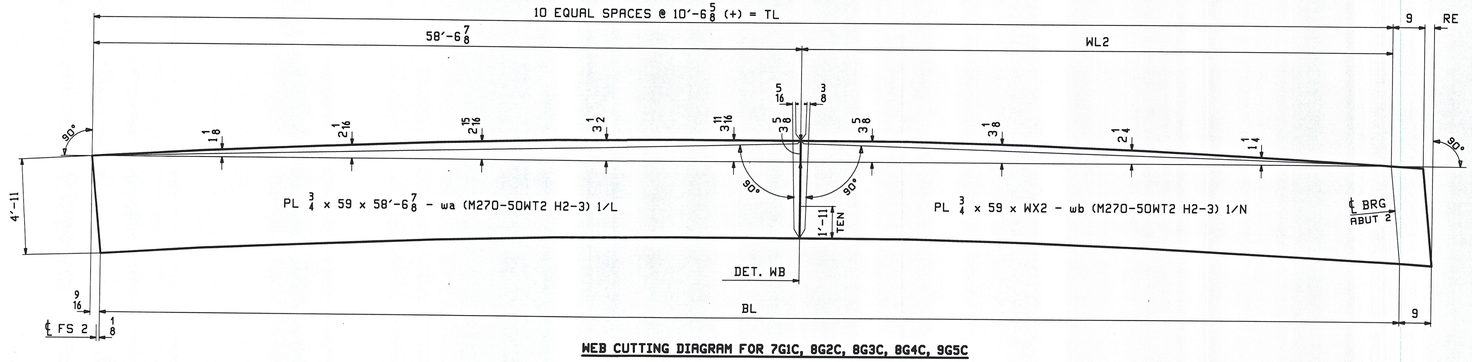

WEB CUTTING DIAGRAM FOR 7G1C, 8G2C, 8G3C, 8G4C, 9G5C

MARK	TL	BL	RE	WL2	WX2
7G1C	105'-6 3/8	105'-6	3/16	46'-11 1/2	47'-9 1/16
8G2C	105'-6 3/8	105'-6 3/16	3/8	46'-11 1/2	47'-9 1/4
8G3C	105'-6 3/8	105'-6 3/16	3/8	46'-11 1/2	47'-9 1/4
8G4C	105'-6 3/8	105'-6 3/16	3/8	46'-11 1/2	47'-9 1/4
9G5C	105'-6 7/16	105'-6 7/16	9/16	46'-11 9/16	47'-9 1/2

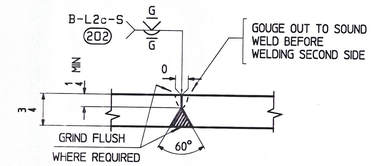

WEB PLATE SPLICE DETAIL "WB"

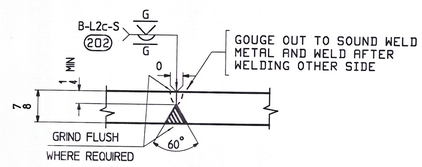

FLANGE SPLICE DETAIL "FA"

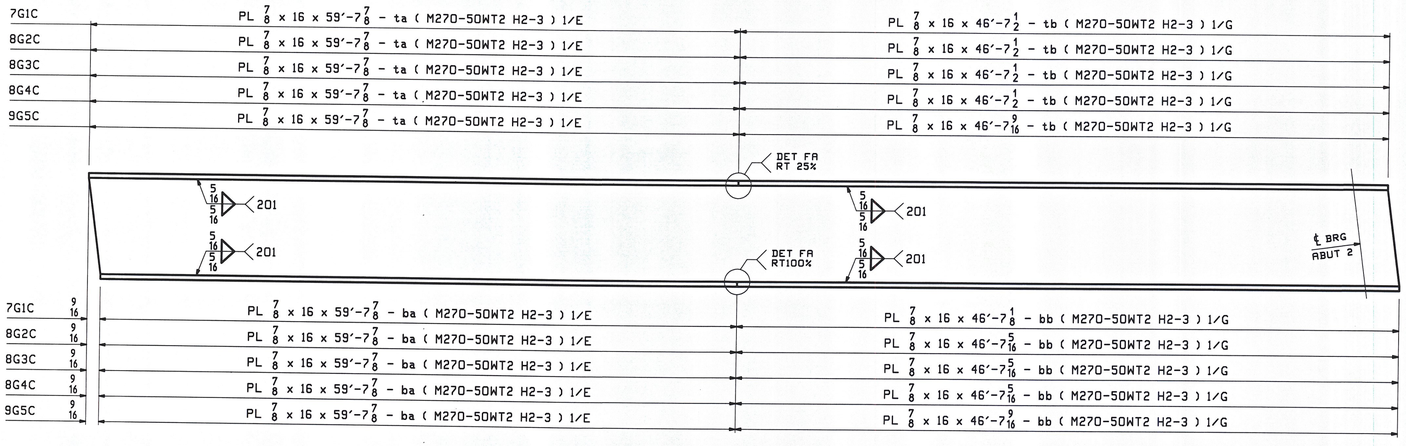

FLANGE DIAGRAM FOR 7G1C, 8G2C, 8G3C, 8G4C, 9G5C

NOTES:
- FOR GENERAL SHOP NOTES SEE DRAWING GN1
- H2-3 INDICATES PLATES THAT REQUIRE CHARPY V-NOTCH TEST AT H FREQUENCY FOR ZONE 2
- RT INDICATES RADIOGRAPHIC TESTING REQUIRED
- ALL MATERIALS AASHTO M270-GR50W

RECEIVED NOV 9 2009 OKD BY MBM 11/5/09

REV.	DATE	REMARKS	DWN	CHK	APVL	SHOP
0						Nov 0 2 2009 AUG 2 7 2009

MATERIAL:	SURFACE PREP. & PAINT:	HOLES:	SHOP BOLTS:
M270-50W	SEE GN1	AS NOTED	AS NOTED

DESCRIPTION: CAMBER & FLANGE DIAGRAMS

CASCO BAY STEEL STRUCTURES, INC.
75 SPRING HILL ROAD SACO, MAINE 04072
PHONE (207) 282-7360 FAX. (207) 282-1179
TENSOR 2006

STRUCTURE: US RTE 2 OVER WINOOSKI RIVER WASHINGTON COUNTY, VT	DRAWN: CRK	DATE: 08/05
	CHKD: RLA	DATE: 08/10
LOCATION: TOWNS OF MORETOWN ~ MIDDLESEX, VT	JOB NO.	DWG NO.
PROJ NO. BRS 0284(14)	421-1	C3
CUSTOMER: WINTERSET INC.		REV. △

RLA Mon, Aug 17, 2009 8:58:43 PM //www/jobs/2006/C3 - Rev0

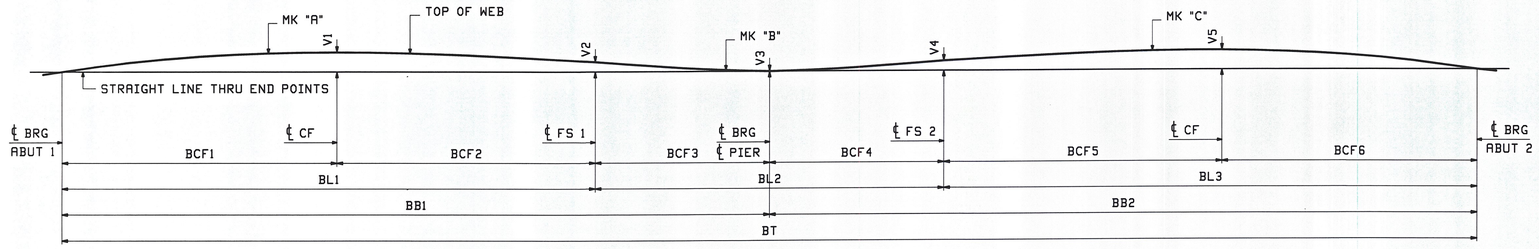

SHOP ASSEMBLY DIAGRAM

LINE	BT	BL1	BL2	BL3	V1	V2	V3	V4	V5	BB1	BB2	BCF1	BCF2	BCF3	BCF4	BCF5	BCF6	"A"	"B"	"C"
1	280'-0 5/8	105'-6 7/16	68'-11 3/4	105'-6 7/16	5	2 1/2	0	2 1/2	4 15/16	140'-0 5/16	140'-0 5/16	54'-5	51'-1 7/16	34'-5 7/8	34'-5 7/8	55'-0 1/8	50'-6 5/16	1G1A	4G1B	7G1C
2	280'-0 11/16	105'-6 1/2	68'-11 11/16	105'-6 1/2	5	2 1/2	0	2 1/2	4 15/16	140'-0 5/16	140'-0 3/8	54'-5	51'-1 1/2	34'-5 13/16	34'-5 7/8	55'-0 3/16	50'-6 5/16	2G2A	5G2B	8G2C
3	280'-0 3/4	105'-6 1/2	68'-11 3/4	105'-6 1/2	5	2 1/2	0	2 1/2	4 15/16	140'-0 3/8	140'-0 3/8	54'-5	51'-1 1/2	34'-5 7/8	34'-5 7/8	55'-0 3/16	50'-6 5/16	2G3A	5G3B	8G3C
4	280'-0 13/16	105'-6 1/2	68'-11 3/4	105'-6 9/16	5	2 1/2	0	2 1/2	4 15/16	140'-0 7/16	140'-0 3/8	54'-5	51'-1 1/2	34'-5 15/16	34'-5 13/16	55'-0 1/4	50'-6 5/16	2G4A	5G4B	8G4C
5	280'-0 15/16	105'-6 1/2	68'-11 13/16	105'-6 5/8	4 15/16	2 1/2	0	2 1/2	5	140'-0 7/16	140'-0 1/2	50'-6 1/4	55'-0 1/4	34'-5 15/16	34'-5 7/8	51'-1 7/16	54'-5 3/16	3G5A	6G5B	9G5C

NOTES
FOR GENERAL NOTES SEE DWG GN1
ALL DIMENSIONS GIVEN AT TOP OF WEB

REV.	DATE	REMARKS	DWN	CHK	APVL	SHOP
					NOV 0 2 2009	
0					AUG 2 7 2009	

MATERIAL: | SURFACE PREP. & PAINT: | HOLES: | SHOP BOLTS:

DESCRIPTION: SHOP ASSEMBLY DIAGRAM

CASCO BAY STEEL STRUCTURES, INC.
75 SPRING HILL ROAD SACO, MAINE 04072
PHONE (207) 282-7360 FAX. (207) 282-1179
TENSOR 2906

STRUCTURE: US RTE 2 OVER WINOOSKI RIVER
WASHINGTON COUNTY, VT

DRAWN: TS DATE: 08/19
CHKD: PCP DATE: 08/20

LOCATION: TOWNS OF MORETOWN ~ MIDDLESEX, VT
PROJ NO. BRS 0284(14)
CUSTOMER: WINTERSET INC.

JOB NO. 421-1
DWG NO. SA1
REV. △

RECEIVED
SSS OK'D BY MEM
NOV 1 2009
11/5/09

PCP Thu, Aug 20, 2009 09:00:46 AM /users/jobs/2906/SA1 1 Rev0

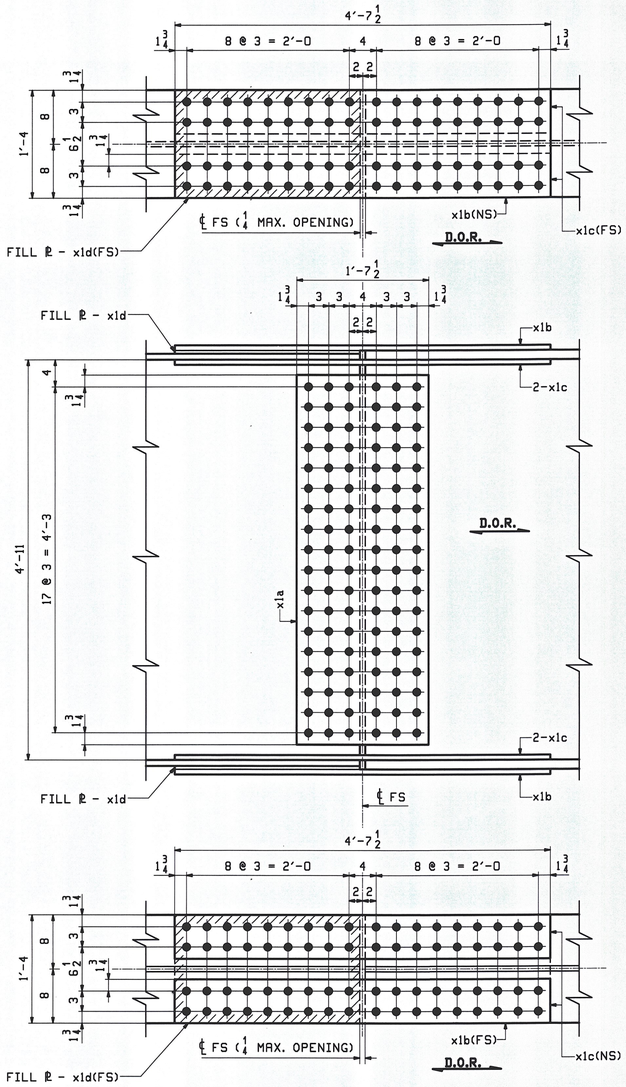

10 - FIELD SPLICE DETAIL - X1M1

FIELD SPLICE 1 & 2

(FOR F.S. 2 ROTATE 180°)

ABM INFO		SHIP	BILL OF MATERIAL					JOB NO.	DRAWING NO.	REV.
									X1	
PAGE	LINE	MARK	QTY	MARK	MATERIAL	LENGTH FT	LENGTH INCHES	REMARKS	WT	PROCUREMENT NOTES
		X1M1	10		FIELD SPLICE				1053	
2	B		20	x1a	PL 3/4 x 54 1/2	1	7 1/2	M270-50WT2 (H2-3)		
2	C		20	x1b	PL 5/8 x 16	4	7 1/2	M270-50WT2 (H2-3)		
2	D		40	x1c	PL 5/8 x 6 1/2	4	7 1/2	M270-50WT2 (H2-3)		
2	E		20	x1d	PL 11GA x 16	2	3 5/8	FILL		

NOTES:

1. FOR GENERAL NOTES SEE DRAWING GN1.
2. HOLES IN SPLICE PLATES ARE PRE-DRILLED. ENDS OF GIRDERS ARE DRILLED FROM SOLID USING SPLICE PLATES AS A TEMPLATE.
3. D.O.R. DENOTES DIRECTION OF MILL ROLLING
4. H2-3 DENOTES CHARPY V-NOTCH TESTING REQUIRED.

REV.	DATE	REMARKS	DWN	CHK	APVL	SHOP
					NOV 0 2 2009	
0					AUG 2 7 2009	

MATERIAL:	SURFACE PREP. & PAINT:	HOLES:	SHOP BOLTS:
M270-50WT2	NONE	15/16"Ø	NONE

DESCRIPTION: GIRDER STANDARDS

CASCO BAY STEEL STRUCTURES, INC.
75 SPRING HILL ROAD SACO, MAINE 04072
PHONE (207) 282-7360 FAX. (207) 282-1179
TENSOR 2906

STRUCTURE: US RTE 2 OVER WINOOSKI RIVER WASHINGTON COUNTY, VT

DRAWN:	DATE:
WJF	08/06
CHKD:	DATE:
PCP	08/17

LOCATION: TOWNS OF MORETOWN ~ MIDDLESEX, VT

PROJ NO. BRS 0284(14)

CUSTOMER: WINTERSET INC.

JOB NO. 421-1

DWG NO. X1

REV. △

RECEIVED
ENG BY SSS OKD BY MRM
NOV 2009
11/5/09

PCP Wed, Aug 19, 2009 05:21:11 PM /users/jobs/2906/X1 1 Rev0

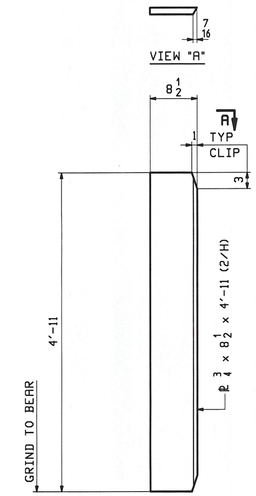

2 - x2a
BRG. STIFF

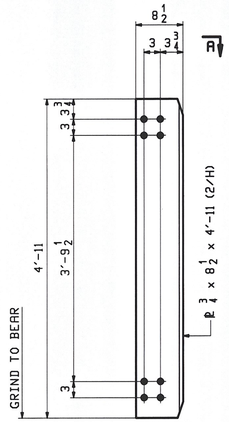

8 - x2b
BRG. STIFF

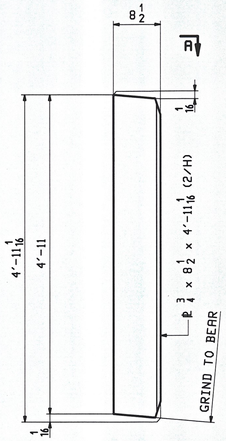

1 - x2c
BRG. STIFF

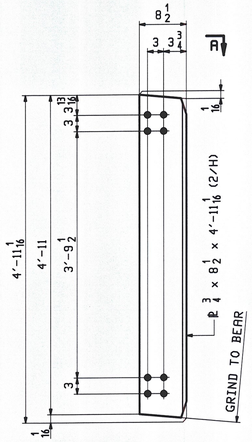

4 - x2d
BRG. STIFF

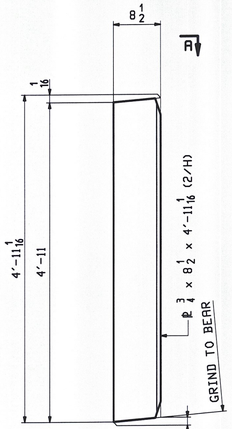

1 - x2f
BRG. STIFF

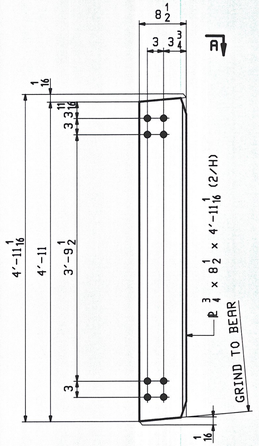

4 - x2g
BRG. STIFF

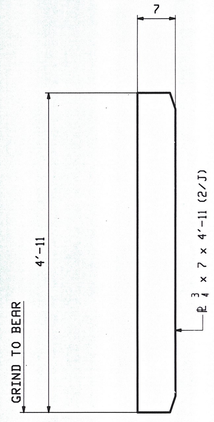

20 - x2h
JACK STIFF

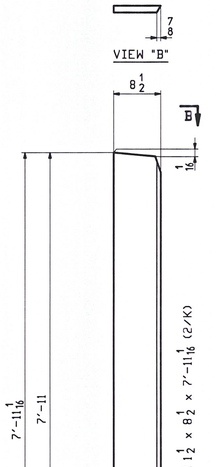

5 - x2k
BRG. STIFF

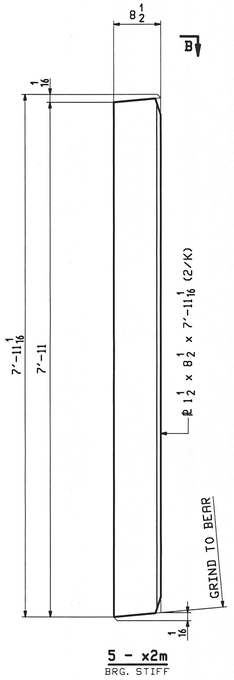

5 - x2m
BRG. STIFF

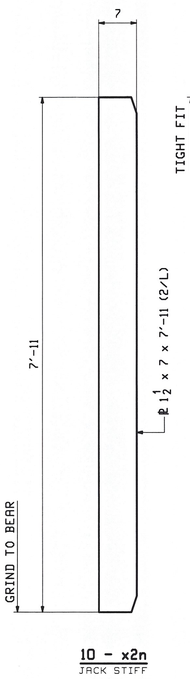

10 - x2n
JACK STIFF

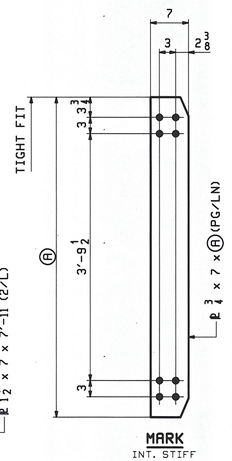

MARK
INT. STIFF

MARK	QTY.	Ⓐ	PG/LN
x2p	112	4'-11	2/M
x2s	8	4'-11 13/16	2/N
x2t	8	5'-1 13/16	2/N

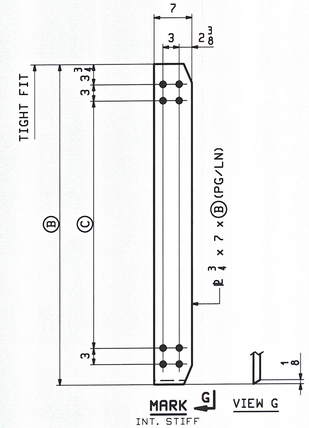

MARK G **VIEW G**
INT. STIFF

MARK	QTY.	Ⓑ	Ⓒ	PG/LN
x2v	8	6'-9 13/16	5'-1 1/2	2/Q
x2w	8	7'-5 7/8	5'-8 1/4	2/R

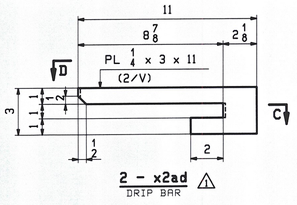

2 - x2ad ⚠
DRIP BAR

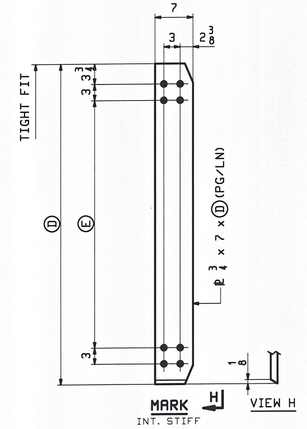

MARK H **VIEW H**
INT. STIFF

MARK	QTY.	Ⓓ	Ⓔ	PG/LN
x2y	8	6'-3	5'-1 1/2	2/P
x2aa	8	6'-9 13/16	5'-8 1/4	2/Q

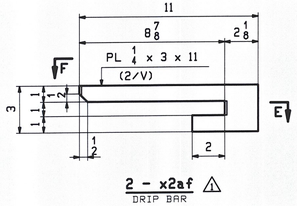

2 - x2af ⚠
DRIP BAR

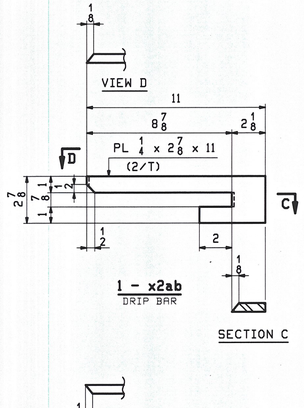

1 - x2ab
DRIP BAR

SECTION C

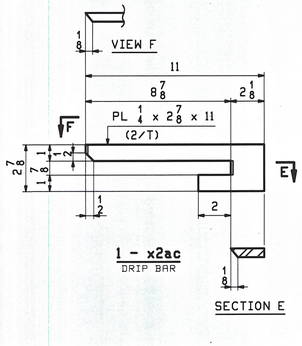

1 - x2ac
DRIP BAR

SECTION E

RECEIVED
BY SSS OKD BY MRM
NOV 9 2009
BY
11/5/09

NOTES:
FOR GENERAL NOTES SEE DRAWING GN1.

REV.	DATE	REMARKS	DWN	CHK	APVL	SHOP
1	10/19	ADDED x2ad & x2af PER APPR.	WJF	PCP		
0						

NOV 0 2 2009
AUG 7 2009

MATERIAL:	SURFACE PREP. & PAINT:	HOLES:	SHOP BOLTS:
M270-50W	SEE GN1	15/16"Ø	NONE

DESCRIPTION: GIRDER STANDARDS

CASCO BAY STEEL STRUCTURES, INC.
75 SPRING HILL ROAD SACO, MAINE 04072
PHONE (207) 282-7360 FAX. (207) 282-1179

TENSOR 2306

STRUCTURE:	DRAWN:	DATE:
US RTE 2 OVER WINOOSKI RIVER WASHINGTON COUNTY, VT	WJF	08/11
	CHKD: PCP	DATE: 08/17
LOCATION: TOWNS OF MORETOWN ~ MIDDLESEX, VT	JOB NO.	DWG NO.
PROJ NO. BRS 0284(14)	421-1	X2
CUSTOMER: WINTERSET INC.		REV. ⚠

Mon, Oct 19, 2009 09:47:55 AM J:\work\284\2009\x2 - Rev1.dgn PCP

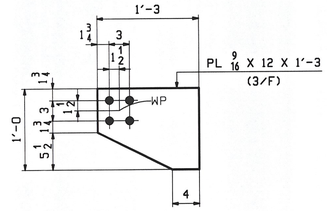

16 - TOP GUSSET PLATES ~ m1a

(@ END CROSSFRAMES)

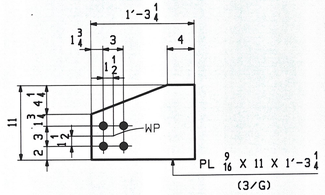

16 - BTM GUSSET PLATES ~ m1b

(@ END CROSSFRAMES)

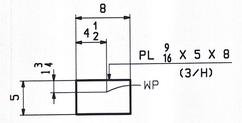

8 - CTR GUSSET PLATES ~ m1c

(@ END CROSSFRAMES)

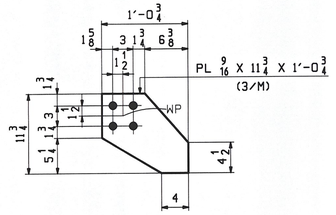

128 - TOP GUSSET PLATES ~ m1d

(@ INT TYPE CF1 CROSSFRAMES)

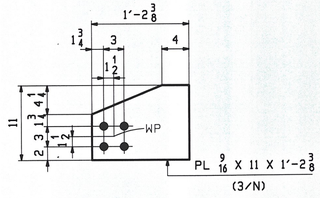

128 - BTM GUSSET PLATES ~ m1f

(@ INT TYPE CF1 CROSSFRAMES)

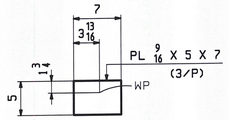

64 - CTR GUSSET PLATES ~ m1g

(@ INT TYPE CF1 CROSSFRAMES)

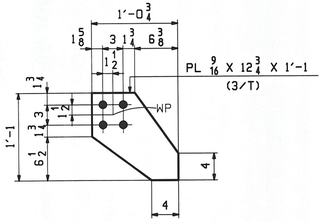

16 - TOP GUSSET PLATES ~ m1h

(@ INT TYPE CF2 CROSSFRAMES)

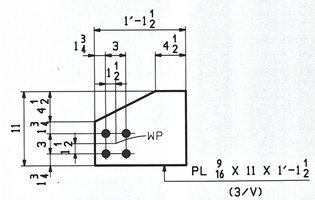

16 - BTM GUSSET PLATES ~ m1k

(@ INT TYPE CF2 CROSSFRAMES)

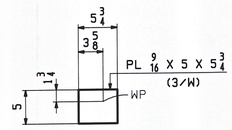

8 - CTR GUSSET PLATES ~ m1m

(@ INT TYPE CF2 CROSSFRAMES)

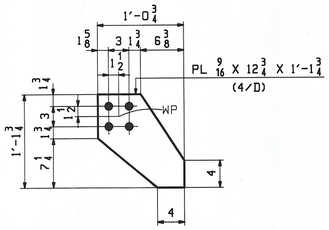

16 - TOP GUSSET PLATES ~ m1n

(@ INT TYPE CF3 CROSSFRAMES)

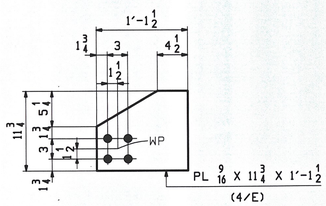

16 - BTM GUSSET PLATES ~ m1p

(@ INT TYPE CF3 CROSSFRAMES)

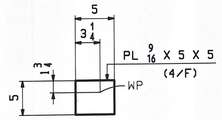

8 - CTR GUSSET PLATES ~ m1s

(@ INT TYPE CF3 CROSSFRAMES)

RECEIVED
ENG'D BY SSS CK'D BY MEM
NOV 1 2009
11/5/09

NOTES:
FOR GENERAL NOTES SEE DRAWING GN1.

REV.	DATE	REMARKS	DWN	CHK	APVL	SHOP
0					NOV 0 2 2009 AUG 2 7 2009	

MATERIAL: M270-50W (UN)	SURFACE PREP. & PAINT: SEE GN1	HOLES: 15/16"ø U.N.	SHOP BOLTS: NONE
DESCRIPTION: CROSSFRAME STANDARDS			

CASCO BAY STEEL STRUCTURES, INC.
75 SPRING HILL ROAD SACO, MAINE 04072
PHONE (207) 282-7360 FAX. (207) 282-1179
TENSOR 2906

STRUCTURE: US RTE 2 OVER WINOOSKI RIVER WASHINGTON COUNTY, VT	DRAWN: TS	DATE: 08/13
	CHKD: PCP	DATE: 08/19
LOCATION: TOWNS OF MORETOWN ~ MIDDLESEX, VT	JOB NO.	DWG NO.
PROJ NO. BRS 0284(14)	421-1	M1
CUSTOMER: WINTERSET INC.		REV. △

PCP Thu, Aug 20, 2009 09:00:57 AM /users/jobs/2906/M1 Rev0

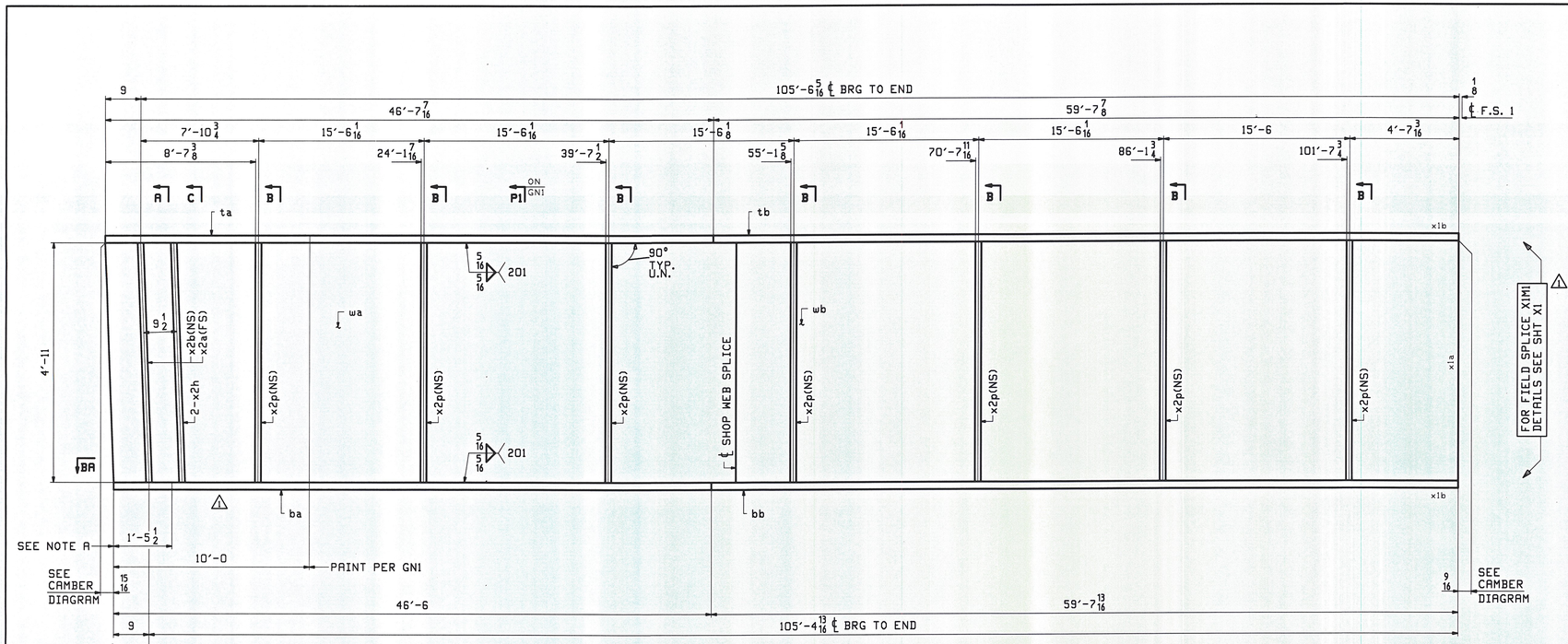

ONE - GIRDER - 1G1A

FOR FIELD SPLICE & STANDARD DETAILS SEE X SHEETS
FOR CAMBER & FLANGE DIAGRAM SEE SHEET C1
FOR GENERAL NOTES SEE SHEET GN1

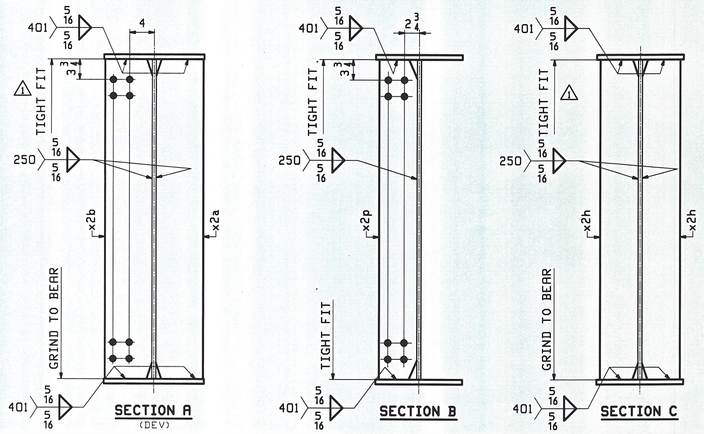

SECTION A (DEV)
SECTION B
SECTION C

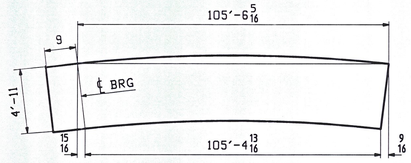

ORIENTATION DIAGRAM

NOTE A:
NO PAINT BOTTOM AND EDGES OF BOTTOM FLANGE.

ABM INFO		SHIP	BILL OF MATERIAL					JOB NO.	DRAWING NO.	REV.
									1	
PAGE	LINE	MARK	QTY	MARK	MATERIAL	LENGTH FT	LENGTH INCHES	REMARKS	WT	PROCUREMENT NOTES
		1G1A	1		GIRDER				27126	
1	N		1	wa	PL 3/4x59	47	8 7/16	M270-50WT2 (H2-3)		
1	L		1	wb	PL 3/4x59	58	6 7/8	M270-50WT2 (H2-3)		
1	G		1	ta	PL 7/8x16	46	7 7/16	M270-50WT2 (H2-3)		
1	E		1	tb	PL 7/8x16	59	7 7/8	M270-50WT2 (H2-3)		
1	G		1	ba	PL 7/8x16	46	6	M270-50WT2 (H2-3)		
1	E		1	bb	PL 7/8x16	59	7 13/16	M270-50WT2 (H2-3)		
2	H		1	x2a	PL 3/4x8 1/2	4	11	M1E BEV		
2	H		1	x2b	PL 3/4x8 1/2	4	11	M1E BEV		
2	J		2	x2h	PL 3/4x7	4	11	M1E		
2	M		7	x2p	PL 3/4x7	4	11			

REV.	DATE	REMARKS	DWN	CHK	APVL	SHOP
1	10/19	REVISED PER APPROVAL	WJF	PCP	NOV 0 2 2009	
0					AUG 2 7 2009	

MATERIAL:	SURFACE PREP. & PAINT:	HOLES:	SHOP BOLTS:
M270-50W (UN)	SEE GN1	15/16"ø U.N.	NONE

DESCRIPTION: GIRDER - 1G1A

CASCO BAY STEEL STRUCTURES, INC.
75 SPRING HILL ROAD SACO, MAINE 04072
PHONE (207) 282-7360 FAX. (207) 282-1179
TENSOR 2906

STRUCTURE: US RTE 2 OVER WINOOSKI RIVER WASHINGTON COUNTY, VT	DRAWN: WJF	DATE: 08/12	
	CHKD: PCP	DATE: 08/17	
LOCATION: TOWNS OF MORETOWN ~ MIDDLESEX, VT	JOB NO.	DWG NO.	
PROJ NO. BRS 0284(14)	421-1	1	
CUSTOMER: WINTERSET INC.		REV. 1	

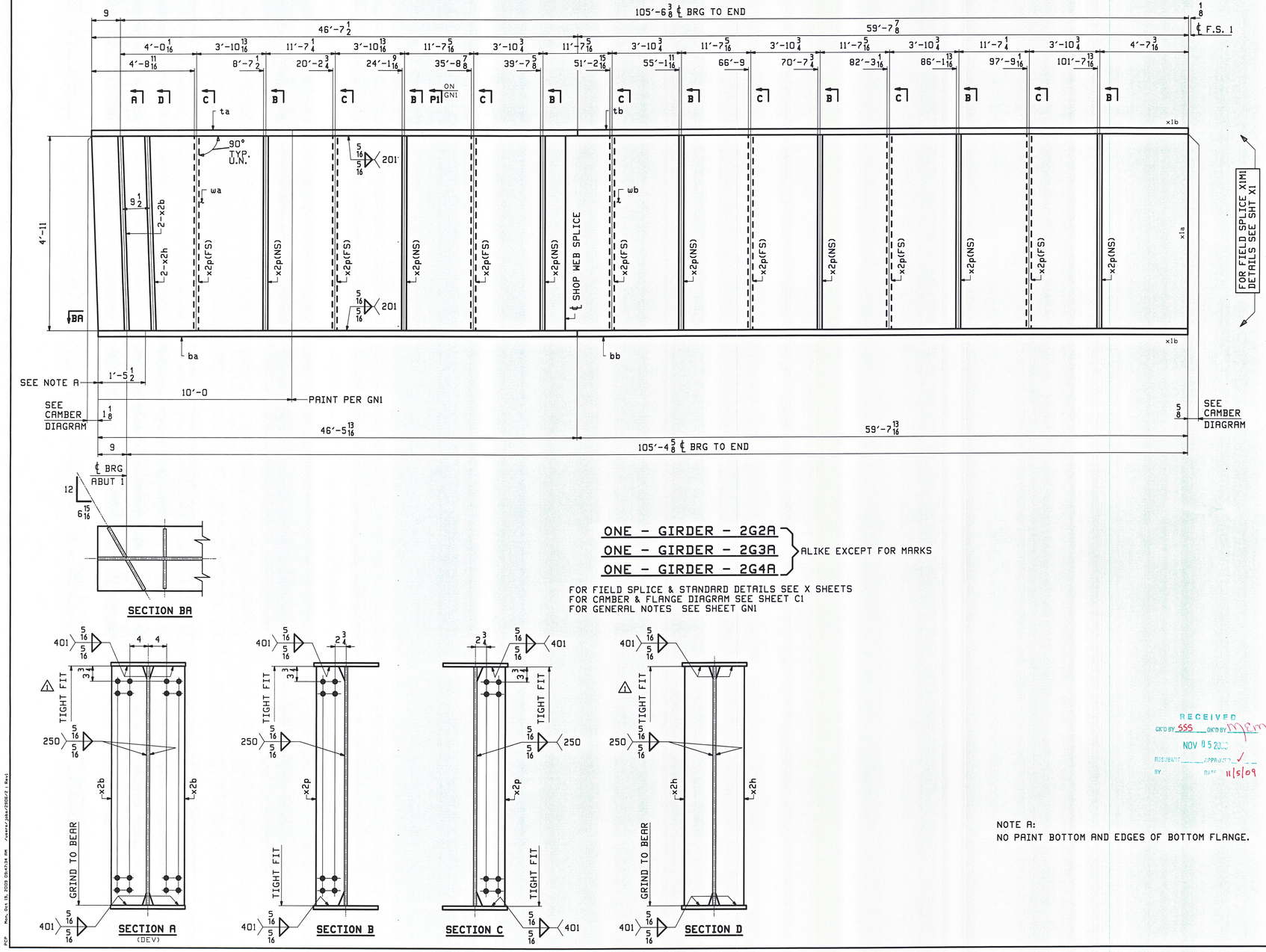

SECTION BA

ONE - GIRDER - 2G2A
ONE - GIRDER - 2G3A
ONE - GIRDER - 2G4A
} ALIKE EXCEPT FOR MARKS

FOR FIELD SPLICE & STANDARD DETAILS SEE X SHEETS
FOR CAMBER & FLANGE DIAGRAM SEE SHEET C1
FOR GENERAL NOTES SEE SHEET GN1

SECTION A (DEV) | SECTION B | SECTION C | SECTION D

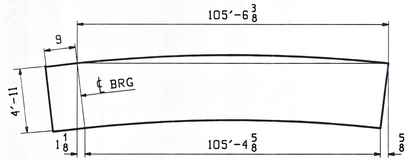

ORIENTATION DIAGRAM

NOTE A:
NO PRINT BOTTOM AND EDGES OF BOTTOM FLANGE.

RECEIVED
CK'D BY SSS CK'D BY MFM
NOV 05 2009
RECEIVED APPROVED
BY DATE 11/5/09

ABM INFO		SHIP	BILL OF MATERIAL					JOB NO.	DRAWING NO.	REV.
									2	
PAGE	LINE	MARK	QTY	MARK	MATERIAL	LENGTH FT	LENGTH INCHES	REMARKS	WT	PROCUREMENT NOTES
		2G2A	1		GIRDER				27741	
		2G3A	1		GIRDER				27741	
		2G4A	1		GIRDER				27741	
1	N		3	wa	PL 3/4×59	47	8 1/2	M270-50W T2 (H2-3)		
1	L		3	wb	PL 3/4×59	58	6 7/8	M270-50W T2 (H2-3)		
1	G		3	ta	PL 7/8×16	46	7 1/2	M270-50W T2 (H2-3)		
1	E		3	tb	PL 7/8×16	59	7 7/8	M270-50W T2 (H2-3)		
1	G		3	ba	PL 7/8×16	46	5 13/16	M270-50W T2 (H2-3)		
1	E		3	bb	PL 7/8×16	59	7 13/16	M270-50W T2 (H2-3)		
2	H		6	x2b	PL 3/4×8 1/2	4	11	MIE BEV		
2	J		6	x2h	PL 3/4×7	4	11	MIE		
2	M		42	x2p	PL 3/4×7	4	11			

REV.	DATE	REMARKS	DWN	CHK	APVL	SHOP
1	10/19	REVISED PER APPROVAL	WJF	PCP	NOV 02 2009	
0					AUG 27 2009	

MATERIAL:	SURFACE PREP. & PAINT:	HOLES:	SHOP BOLTS:
M270-50W (UN)	SEE GN1	15/16 ø U.N.	NONE

DESCRIPTION: GIRDERS - 2G2A, 2G3A, 2G4A

CASCO BAY STEEL STRUCTURES, INC.
75 SPRING HILL ROAD SACO, MAINE 04072
PHONE (207) 282-7360 FAX. (207) 282-1179

TENSOR 2506

STRUCTURE:	DRAWN:	DATE:
US RTE 2 OVER WINOOSKI RIVER WASHINGTON COUNTY, VT	WJF	08/12
	CHK'D: PCP	DATE: 08/17
LOCATION: TOWNS OF MORETOWN ~ MIDDLESEX, VT	JOB NO.	DWG NO.
PROJ NO. BRS 0284(14)	421-1	2
CUSTOMER: WINTERSET INC.		REV. 1

PCP Mon, Oct 19, 2009 09:34:34 AM J:\work\jobs\2506\2 1 Rev1

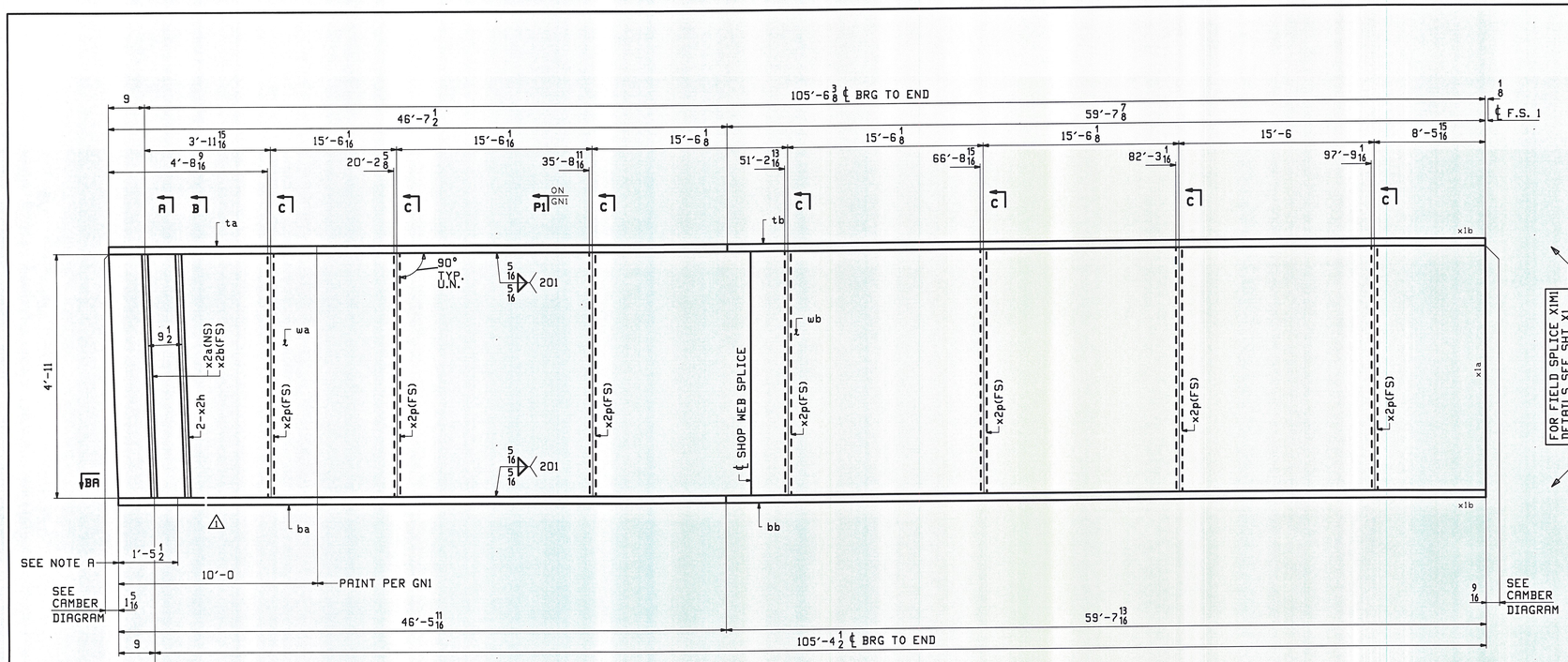

ABM INFO		SHIP	BILL OF MATERIAL					JOB NO.	DRAWING NO.		REV.
PAGE	LINE	MARK	QTY	MARK	MATERIAL	LENGTH FT	LENGTH INCHES	REMARKS	3		
		3G5A	1		GIRDER				WT	PROCUREMENT NOTES	
									27126		
1	N		1	wa	PL 3/4×59	47	8 1/2	M270-50WT2 (H2-3)			
1	L		1	wb	PL 3/4×59	58	6 7/8	M270-50WT2 (H2-3)			
1	G		1	ta	PL 7/8×16	46	7 1/2	M270-50WT2 (H2-3)			
1	E		1	tb	PL 7/8×16	59	7 7/8	M270-50WT2 (H2-3)			
1	G		1	ba	PL 7/8×16	46	5 11/16	M270-50WT2 (H2-3)			
1	E		1	bb	PL 7/8×16	59	7 13/16	M270-50WT2 (H2-3)			
2	H		1	x2a	PL 3/4×8 1/2	4	11	MIE BEV			
2	H		1	x2b	PL 3/4×8 1/2	4	11	MIE BEV			
2	J		2	x2h	PL 3/4×7	4	11	MIE			
2	M		7	x2p	PL 3/4×7	4	11				

ONE - GIRDER - 3G5A

FOR FIELD SPLICE & STANDARD DETAILS SEE X SHEETS
FOR CAMBER & FLANGE DIAGRAM SEE SHEET C1
FOR GENERAL NOTES SEE SHEET GN1

SECTION BA

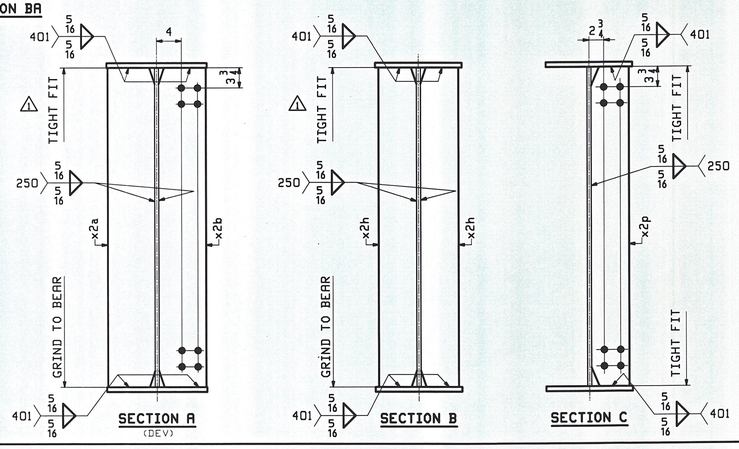

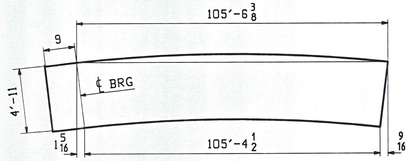

ORIENTATION DIAGRAM

RECEIVED
OK'D BY SSS OK'D BY
NOV 05 2009
RECEIVED APPROVED
BY DATE 11/5/09

NOTE A:
NO PAINT BOTTOM AND EDGES OF BOTTOM FLANGE.

REV.	DATE	REMARKS	DWN	CHK	APVL	SHOP
1	10/19	REVISED PER APPROVAL	WJF	PCP	10 2 2009	
0					AUG 27 2009	

MATERIAL:	SURFACE PREP. & PAINT:	HOLES:	SHOP BOLTS:
M270-50W (UN)	SEE GN1	15/16 ø U.N.	NONE

DESCRIPTION: GIRDER - 3G5A

CASCO BAY STEEL STRUCTURES, INC.
75 SPRING HILL ROAD SACO, MAINE 04072
PHONE (207) 282-7360 FAX. (207) 282-1179
TENSOR 2906

STRUCTURE:	DRAWN:	DATE:
US RTE 2 OVER WINOOSKI RIVER WASHINGTON COUNTY, VT	WJF	08/12
	CHKD: PCP	DATE: 08/17
LOCATION: TOWNS OF MORETOWN ~ MIDDLESEX, VT	JOB NO.	DWG NO.
PROJ NO. BRS 0284(14)	421-1	3
CUSTOMER: WINTERSET INC.		REV. 1

PCP Mon, Oct 19, 2009 09:19:38 AM J:\cad\jobs\2005\3 Bmi\

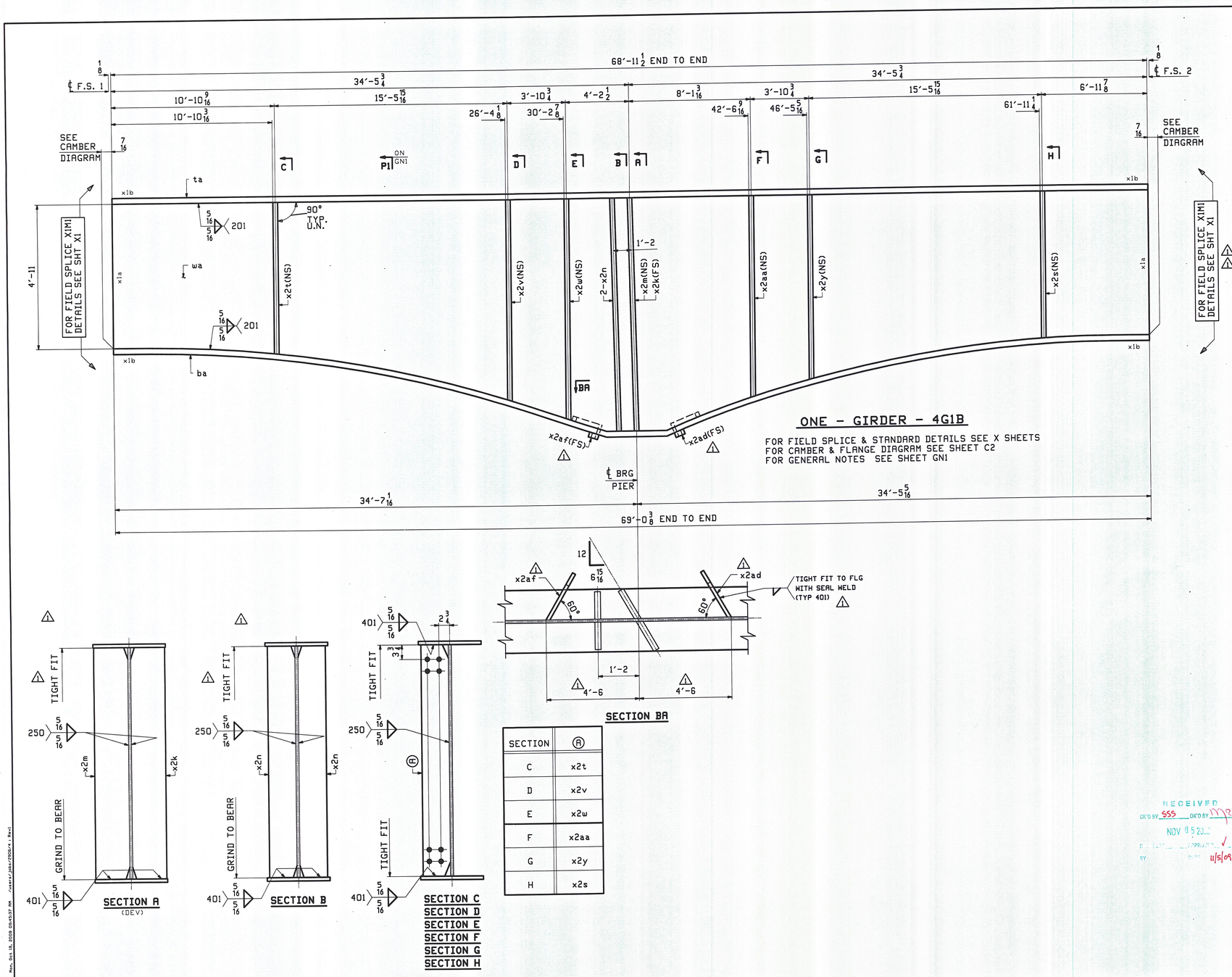

ONE - GIRDER - 4G1B

FOR FIELD SPLICE & STANDARD DETAILS SEE X SHEETS
FOR CAMBER & FLANGE DIAGRAM SEE SHEET C2
FOR GENERAL NOTES SEE SHEET GN1

SECTION A
(DEV)

SECTION B

SECTION C
SECTION D
SECTION E
SECTION F
SECTION G
SECTION H

SECTION BA

SECTION	Ⓐ
C	x2t
D	x2v
E	x2w
F	x2aa
G	x2y
H	x2s

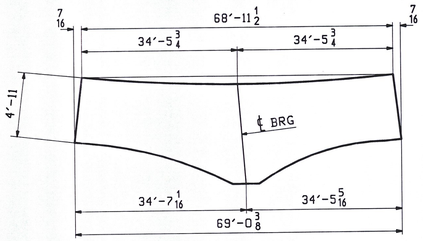

ORIENTATION DIAGRAM

RECEIVED
OK'D BY SSS OK'D BY MPM
NOV 05 2009
BY DATE 11/5/09

ABM INFO PAGE	ABM INFO LINE	SHIP MARK	QTY	MARK	MATERIAL	LENGTH FT	LENGTH INCHES	REMARKS	WT	PROCUREMENT NOTES
		4G1B	1		GIRDER				26200	
1	J		1	wa	PL 3/4 x 95	69	0 3/8	M270-50WT2 (H2-3)		
1	C		1	ta	PL 1x16	68	11 1/2	M270-50WT2 (H2-3)		
1	A		1	ba	PL 1x16	69	5/16	M270-50WT2 (H2-3)		
2	K		1	x2k	PL 1 1/2 x 8 1/2	7	11 1/16	MIE BEV		
2	K		1	x2m	PL 1 1/2 x 8 1/2	7	11 1/16	MIE BEV		
2	L		2	x2n	PL 1 1/2 x 7	7	11	MIE		
2	N		1	x2s	PL 3/4 x 7	4	11 13/16			
2	N		1	x2t	PL 3/4 x 7	5	1 13/16			
2	Q		1	x2v	PL 3/4 x 7	6	9 13/16			
2	R		1	x2w	PL 3/4 x 7	7	5 7/8			
2	P		1	x2y	PL 3/4 x 7	8	3			
2	Q		1	x2aa	PL 3/4 x 7	8	9 13/16			
2	V		1	x2ad	PL 1/4 x 3	0	11			
2	V		1	x2af	PL 1/4 x 3	0	11			

BILL OF MATERIAL

JOB NO.

DRAWING NO. 4

REV.

REV.	DATE	REMARKS	DWN	CHK	APVL	SHOP
1	10/19	REVISED PER APPROVAL	WJF	PCP	NOV 0 2 2009	
0					AUG 2 7 2009	

MATERIAL:	SURFACE PREP. & PAINT:	HOLES:	SHOP BOLTS:
M270-50W (UN)	SEE GN1	15/16"ø U.N.	NONE

DESCRIPTION: GIRDER - 4G1B

CASCO BAY STEEL STRUCTURES, INC.
75 SPRING HILL ROAD SACO, MAINE 04072
PHONE (207) 282-7360 FAX. (207) 282-1179
TENSOR 2906

STRUCTURE: US RTE 2 OVER WINOOSKI RIVER WASHINGTON COUNTY, VT	DRAWN: WJF	DATE: 08/13	
	CHKD: PCP	DATE: 08/17	
LOCATION: TOWNS OF MORETOWN ~ MIDDLESEX, VT	JOB NO. 421-1	DWG NO. 4	
PROJ NO. BRS 0284(14)		REV. 1	
CUSTOMER: WINTERSET INC.			

PCP Mon, Oct 19, 2009 09:49:37 AM //sssrv/jobs/2009/4.1.dwg

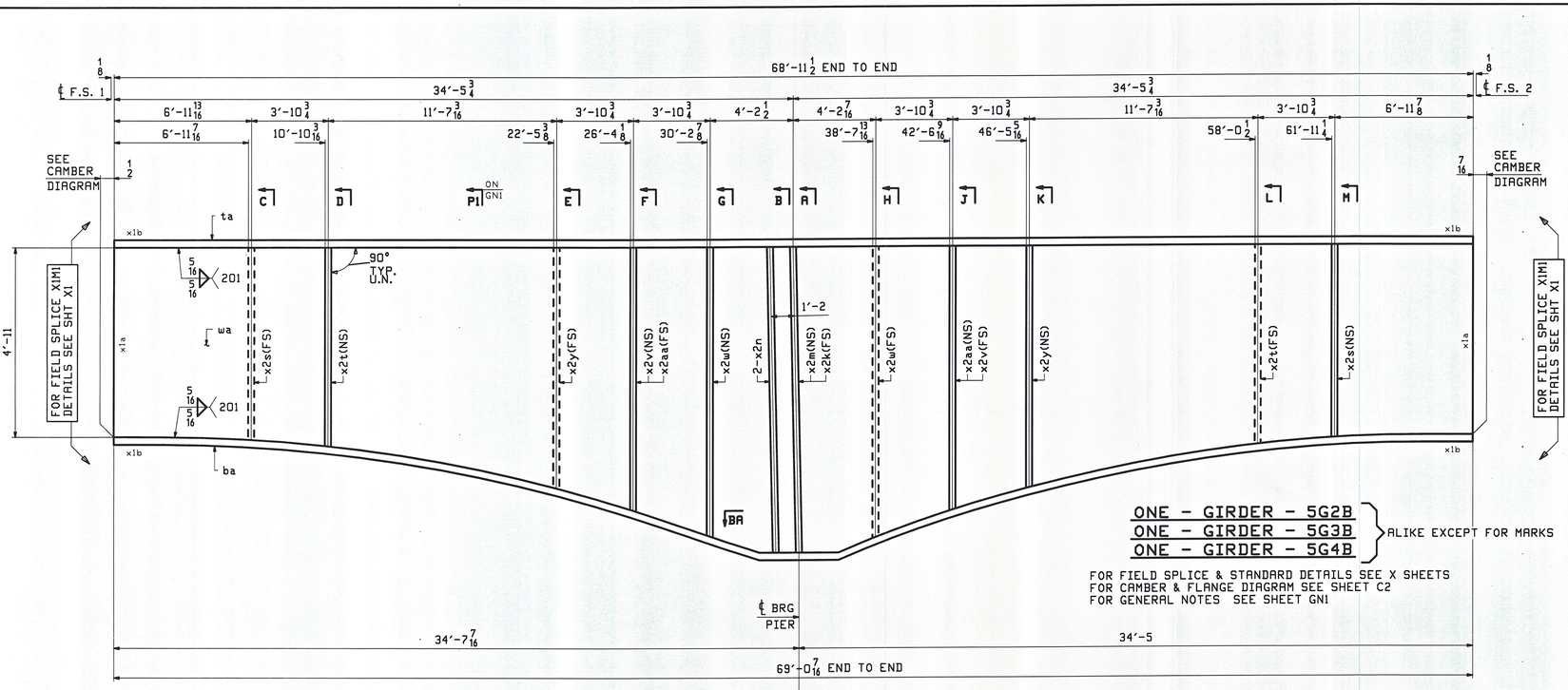

ONE - GIRDER - 5G2B
ONE - GIRDER - 5G3B
ONE - GIRDER - 5G4B
} ALIKE EXCEPT FOR MARKS

FOR FIELD SPLICE & STANDARD DETAILS SEE X SHEETS
FOR CAMBER & FLANGE DIAGRAM SEE SHEET C2
FOR GENERAL NOTES SEE SHEET GN1

ABM INFO		SHIP	BILL OF MATERIAL					JOB NO.	DRAWING NO.	REV.
									5	
PAGE	LINE	MARK	QTY	MARK	MATERIAL	LENGTH FT	LENGTH INCHES	REMARKS	WT	PROCUREMENT NOTES
		5G2B	1		GIRDER				26867	
		5G3B	1		GIRDER				26867	
		5G4B	1		GIRDER				26867	
1	J		3	wa	PL 3/4×95	69	0 7/16	M270-50W1T2 (H2-3)		
1	C		3	ta	PL 1×16	68	11 1/2	M270-50W1T2 (H2-3)		
1	A		3	ba	PL 1×16	69	5 7/16	M270-50W1T2 (H2-3)		
2	K		3	x2k	PL 1 1/2×8 1/2	7	11 1/16	MIC BEV		
2	K		3	x2m	PL 1 1/2×8 1/2	7	11 1/16	MIC BEV		
2	L		6	x2n	PL 1 1/2×7	7	11	MIC		
2	N		6	x2s	PL 3/4×7	4	11 13/16			
2	N		6	x2t	PL 3/4×7	5	1 13/16			
2	Q		6	x2v	PL 3/4×7	6	9 13/16			
2	R		6	x2w	PL 3/4×7	7	5 7/8			
2	P		6	x2y	PL 3/4×7	8	3			
2	Q		6	x2aa	PL 3/4×7	8	9 13/16			

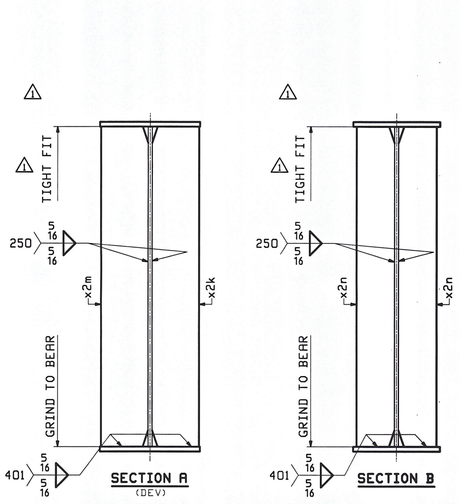

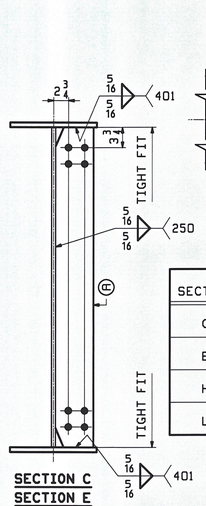

SECTION	Ⓐ
C	x2s
E	x2y
H	x2w
L	x2t

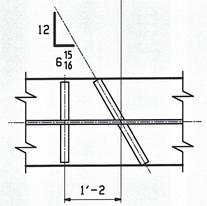

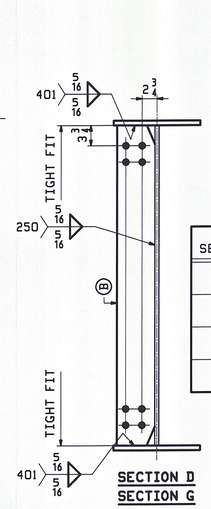

SECTION	Ⓑ
D	x2t
G	x2w
K	x2y
M	x2s

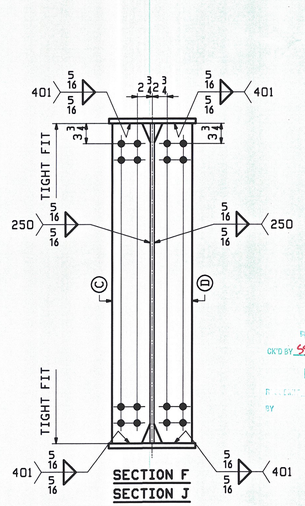

SECTION	Ⓒ	Ⓓ
F	x2v	x2aa
J	x2aa	x2v

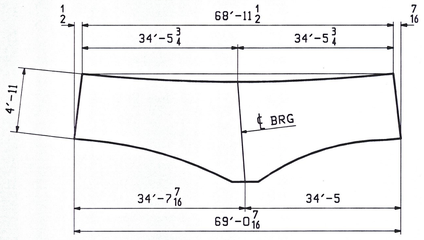

ORIENTATION DIAGRAM

RECEIVED NOV 9 5 2009 BY DATE 11/5/09

REV.	DATE	REMARKS	DWN	CHK	APVL	SHOP
1	10/19	REVISED PER APPROVAL	WJF	PCP	NOV 0 2 2009	
0					AUG 2 7 2009	

MATERIAL:	SURFACE PREP. & PAINT:	HOLES:	SHOP BOLTS:
M270-50W (UN)	SEE GN1	15/16" ø U.N.	NONE

DESCRIPTION: GIRDERS - 5G2B, 5G3B, 5G4B

CASCO BAY STEEL STRUCTURES, INC.
75 SPRING HILL ROAD SACO, MAINE 04072
PHONE (207) 282-7360 FAX. (207) 282-1179

TENSOR 2906

STRUCTURE:	DRAWN:	DATE:
US RTE 2 OVER WINOOSKI RIVER WASHINGTON COUNTY, VT	WJF	08/13
	CHKD: PCP	DATE: 08/17
LOCATION: TOWNS OF MORETOWN ~ MIDDLESEX, VT	JOB NO. 421-1	DWG NO. 5
PROJ NO. BRS 0284(14)		REV. 1
CUSTOMER: WINTERSET INC.		

PCP Mon, Oct 19, 2009 09:45:13 AM J:\work\jobs\2906\5 (Rev)

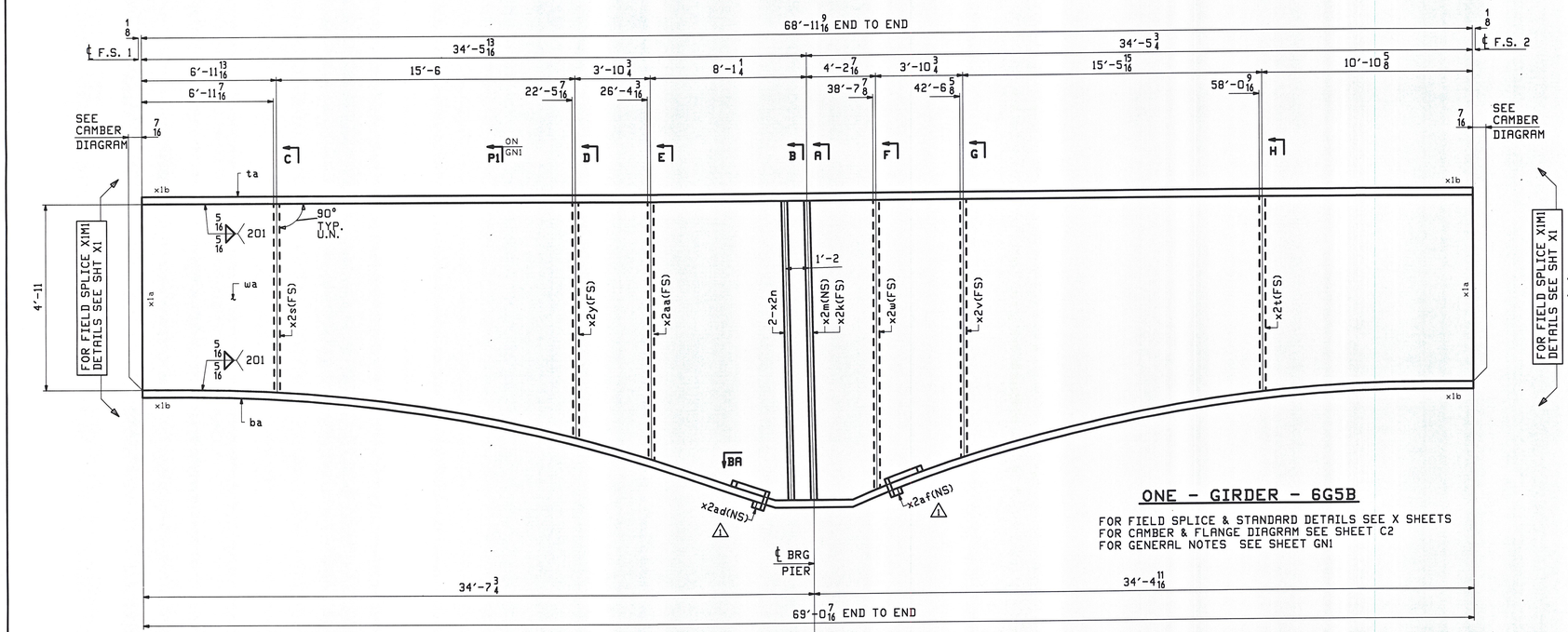

ABM INFO		SHIP	BILL OF MATERIAL					JOB NO.	DRAWING NO.		REV.
									6		
PAGE	LINE	MARK	QTY	MARK	MATERIAL	LENGTH FT	LENGTH INCHES	REMARKS	WT	PROCUREMENT NOTES	
		6G5B	1		GIRDER				26201		
1	J		1	wa	PL 3/4 x 95	69	0 7/16	M270-50WT2 (H2-3)			
1	C		1	ta	PL 1 x 16	68	11 9/16	M270-50WT2 (H2-3)			
1	A		1	ba	PL 1 x 16	69	5 1/4	M270-50WT2 (H2-3)			
2	K		1	x2k	PL 1 1/2 x 8 1/2	7	11 1/16	MIE BEV			
2	K		1	x2m	PL 1 1/2 x 8 1/2	7	11 1/16	MIE BEV			
2	L		2	x2n	PL 1 1/2 x 7	7	11	MIE			
2	N		1	x2s	PL 3/4 x 7	4	11 13/16				
2	N		1	x2t	PL 3/4 x 7	5	1 13/16				
2	Q		1	x2v	PL 3/4 x 7	6	9 13/16				
2	R		1	x2w	PL 3/4 x 7	7	5 7/8				
2	P		1	x2y	PL 3/4 x 7	6	3				
2	Q		1	x2aa	PL 3/4 x 7	6	9 13/16				
2	V		1	x2ad	PL 1/4 x 3	0	11				
2	V		1	x2af	PL 1/4 x 3	0	11				

ONE - GIRDER - 6G5B

FOR FIELD SPLICE & STANDARD DETAILS SEE X SHEETS
FOR CAMBER & FLANGE DIAGRAM SEE SHEET C2
FOR GENERAL NOTES SEE SHEET GN1

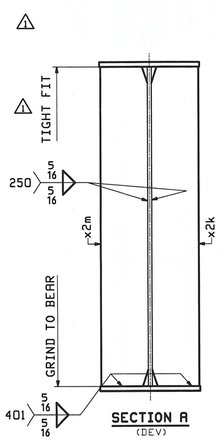

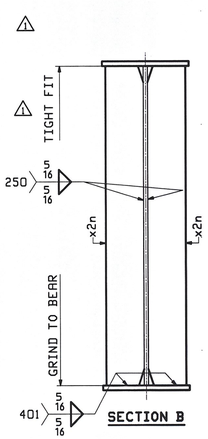

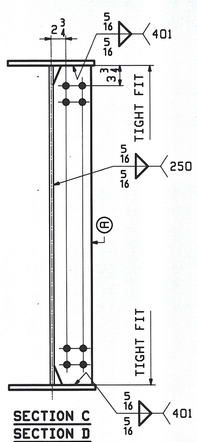

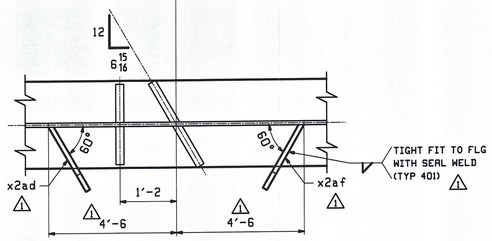

SECTION	Ⓐ
C	x2s
D	x2y
E	x2aa
F	x2w
G	x2v
H	x2t

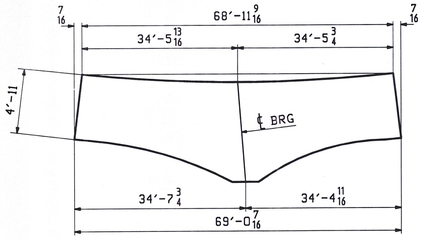

ORIENTATION DIAGRAM

RECEIVED
OK'D BY SSS OK'D BY
NOV 15 20..
11/5/09

REV.	DATE	REMARKS	DWN	CHK	APVL	SHOP
1	10/19	REVISED PER APPROVAL	WJF	PCP	AUG 0 2 2009	
0					AUG 2 7 2009	

MATERIAL:	SURFACE PREP. & PAINT:	HOLES:	SHOP BOLTS:
M270-50W (UN)	SEE GN1	15/16" ø U.N.	NONE

DESCRIPTION: GIRDER - 6G5B

CASCO BAY STEEL STRUCTURES, INC.
75 SPRING HILL ROAD SACO, MAINE 04072
PHONE (207) 282-7360 FAX. (207) 282-1179

TENSOR 2916

STRUCTURE: US RTE 2 OVER WINOOSKI RIVER WASHINGTON COUNTY, VT	DRAWN: WJF	DATE: 08/13
	CHKD: PCP	DATE: 08/17
LOCATION: TOWNS OF MORETOWN ~ MIDDLESEX, VT	JOB NO.	DWG NO.
PROJ NO. BRS 0284(14)	421-1	6
CUSTOMER: WINTERSET INC.		REV. 1

PCP Mon, Oct 19, 2009 08:45:4 PM J:\steel\jobs\2150s\6 1.dwg

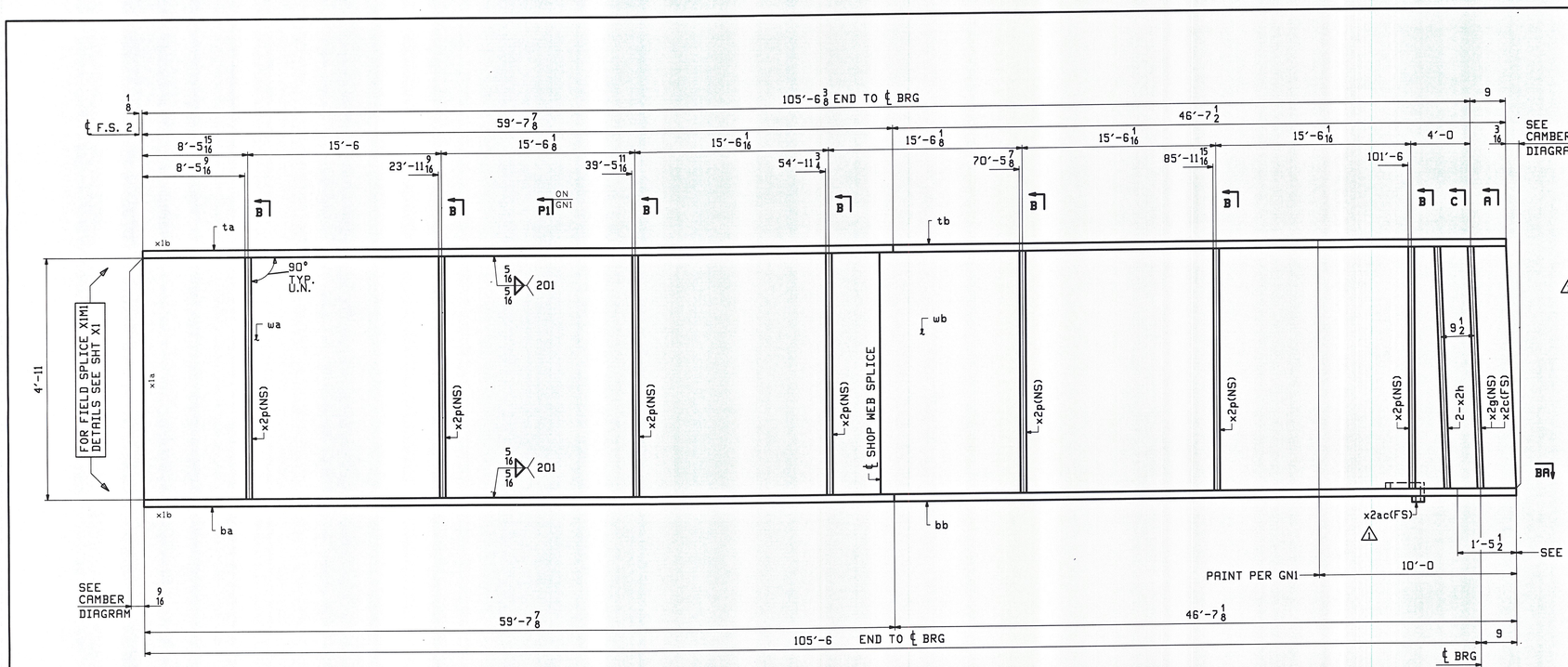

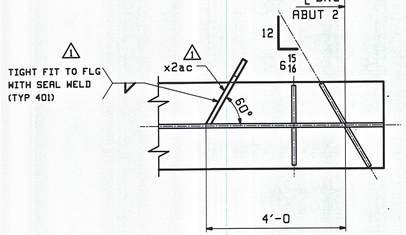

SECTION BA

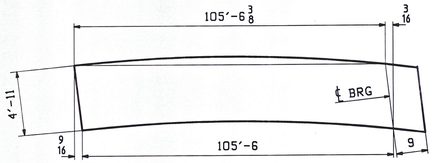

ORIENTATION DIAGRAM

ONE - GIRDER - 7G1C

FOR FIELD SPLICE & STANDARD DETAILS SEE X SHEETS
FOR CAMBER & FLANGE DIAGRAM SEE SHEET C3
FOR GENERAL NOTES SEE SHEET GN1

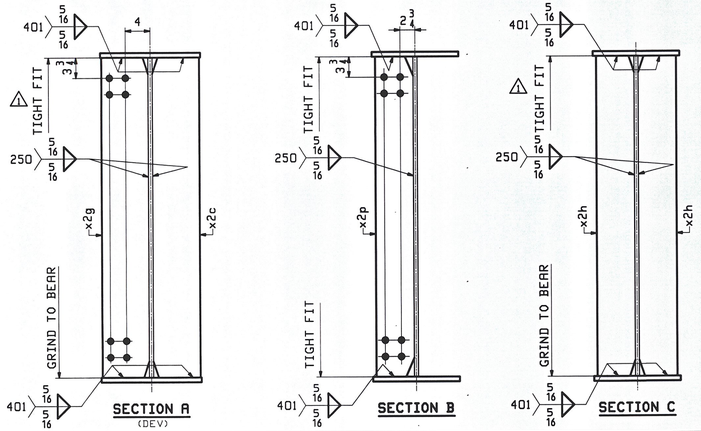

SECTION A (DEV)
SECTION B
SECTION C

NOTE A:
NO PAINT BOTTOM AND EDGES OF BOTTOM FLANGE.

ABM INFO		SHIP	BILL OF MATERIAL					JOB NO.	DRAWING NO.	REV.
									7	
PAGE	LINE	MARK	QTY	MARK	MATERIAL	LENGTH FT	LENGTH INCHES	REMARKS	WT	PROCUREMENT NOTES
		7G1C	1		GIRDER				27141	
1	L		1	wa	PL 3/4x59	58	6 7/8	M270-50WT2 (H2-3)		
1	N		1	wb	PL 3/4x59	47	9 1/16	M270-50WT2 (H2-3)		
1	E		1	ta	PL 7/8x16	59	7 7/8	M270-50WT2 (H2-3)		
1	G		1	tb	PL 7/8x16	46	7 1/2	M270-50WT2 (H2-3)		
1	E		1	ba	PL 7/8x16	59	7 7/8	M270-50WT2 (H2-3)		
1	G		1	bb	PL 7/8x16	46	7 1/8	M270-50WT2 (H2-3)		
2	H		1	x2c	PL 3/4x8 1/2	4	11 1/16	M1E BEV		
2	H		1	x2g	PL 3/4x8 1/2	4	11 1/16	M1E BEV		
2	J		2	x2h	PL 3/4x7	4	11	M1E		
2	M		7	x2p	PL 3/4x7	4	11			
2	T		1	x2ac	PL 1/4x2 7/8	0	11			

REV.	DATE	REMARKS	DWN	CHK	APVL	SHOP
1	10/19	REVISED PER APPROVAL	WJF	PCP	NOV 0 2 2009	
0					AUG 2 7 2009	

MATERIAL:	SURFACE PREP. & PAINT:	HOLES:	SHOP BOLTS:
M270-50W (UN)	SEE GN1	15/16"ø U.N.	NONE

DESCRIPTION: GIRDER - 7G1C

CASCO BAY STEEL STRUCTURES, INC.
75 SPRING HILL ROAD SACO, MAINE 04072
PHONE (207) 282-7360 FAX. (207) 282-1179
TENSOR 2906

STRUCTURE: US RTE 2 OVER WINOOSKI RIVER WASHINGTON COUNTY, VT	DRAWN: WJF	DATE: 08/13
	CHKD: PCP	DATE: 08/17
LOCATION: TOWNS OF MORETOWN ~ MIDDLESEX, VT	JOB NO.	DWG NO.
PROJ NO. BRS 0284(14)	421-1	7
CUSTOMER: WINTERSET INC.		REV. 1

RECEIVED
CK'D BY SSS CK'D BY MEM
NOV 05 2009
11/5/09

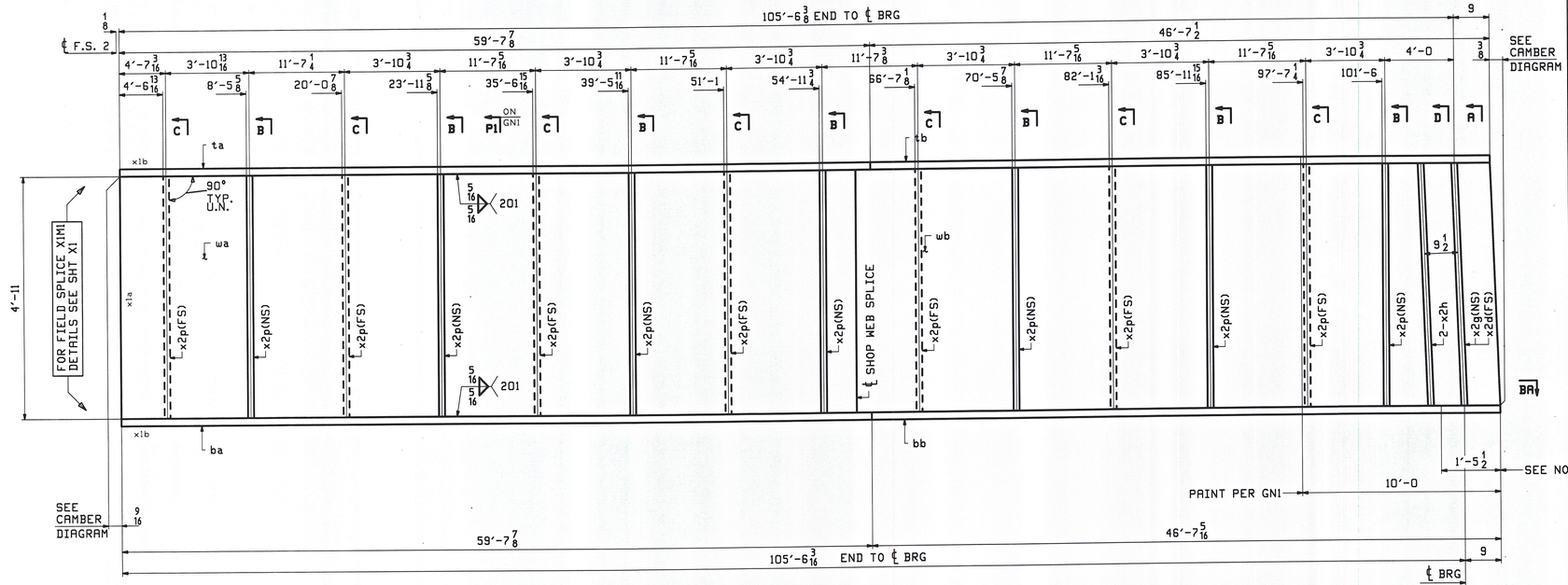

ONE - GIRDER - 8G2C
ONE - GIRDER - 8G3C
ONE - GIRDER - 8G4C
} ALIKE EXCEPT FOR MARKS

FOR FIELD SPLICE & STANDARD DETAILS SEE X SHEETS
FOR CAMBER & FLANGE DIAGRAM SEE SHEET C3
FOR GENERAL NOTES SEE SHEET GN1

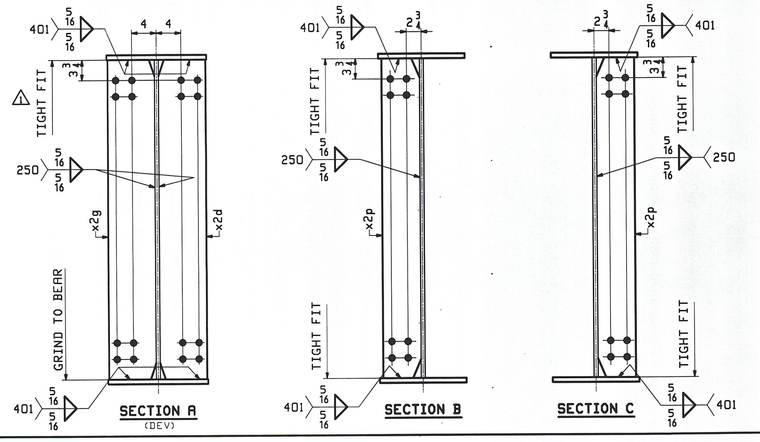

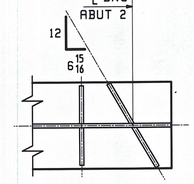

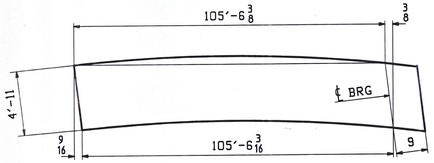

ORIENTATION DIAGRAM

NOTE A:
NO PAINT BOTTOM AND EDGES OF BOTTOM FLANGE.

ABM INFO PAGE	ABM INFO LINE	SHIP MARK	QTY	MARK	MATERIAL	LENGTH FT	LENGTH INCHES	REMARKS	WT	PROCUREMENT NOTES
		8G2C	1		GIRDER				27757	
		8G3C	1		GIRDER				27757	
		8G4C	1		GIRDER				27757	
1	L		3	wa	PL 3/4 x 59	58	6 7/8	M270-50WT2 (H2-3)		
1	N		3	wb	PL 3/4 x 59	47	9 1/4	M270-50WT2 (H2-3)		
1	E		3	ta	PL 7/8 x 16	59	7 7/8	M270-50WT2 (H2-3)		
1	G		3	tb	PL 7/8 x 16	46	7 1/2	M270-50WT2 (H2-3)		
1	E		3	ba	PL 7/8 x 16	59	7 7/8	M270-50WT2 (H2-3)		
1	G		3	bb	PL 7/8 x 16	46	7 5/16	M270-50WT2 (H2-3)		
2	H		3	x2d	PL 3/4 x 8 1/2	4	11 1/16	MIE BEV		
2	H		3	x2g	PL 3/4 x 8 1/2	4	11 1/16	MIE BEV		
2	J		6	x2h	PL 3/4 x 7	4	11	MIE		
2	M		42	x2p	PL 3/4 x 7	4	11			

BILL OF MATERIAL

JOB NO.

DRAWING NO. 8

REV.

REV.	DATE	REMARKS	DWN	CHK	APVL	SHOP
1	10/19	REVISED PER APPROVAL	WJF	PCP		
0						

RECEIVED NOV 02 2009 AUG 27 2009

ORG'SY SSS ORD'BY MRM NOV 1522 11/5/09

MATERIAL:	SURFACE PREP. & PAINT:	HOLES:	SHOP BOLTS:
M270-50W (UN)	SEE GN1	15/16 ø U.N.	NONE

DESCRIPTION: GIRDERS - 8G3C, 8G3C, 8G4C

CASCO BAY STEEL STRUCTURES, INC.
75 SPRING HILL ROAD SACO, MAINE 04072
PHONE (207) 282-7360 FAX. (207) 282-1179
TENSOR 2906

STRUCTURE: US RTE 2 OVER WINOOSKI RIVER WASHINGTON COUNTY, VT	DRAWN: WJF	DATE: 08/13	
	CHKD: PCP	DATE: 08/17	
LOCATION: TOWNS OF MORETOWN ~ MIDDLESEX, VT	JOB NO. 421-1	DWG NO. 8	
PROJ NO. BRS 0284(14)		REV. 1	
CUSTOMER: WINTERSET INC.			

PCP Mon, Oct 19, 2009 09:47:08 AM c:\users\pete\250-2906\8.1.dwg

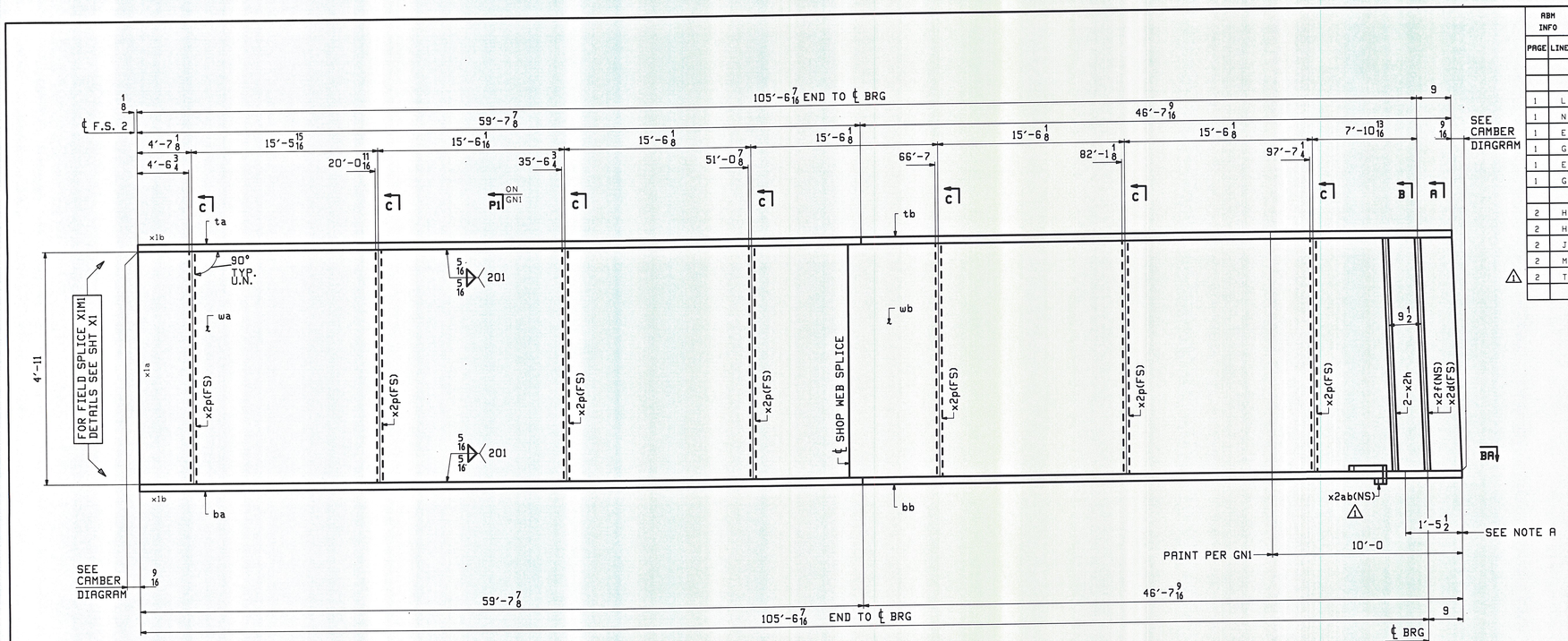

ABM INFO		SHIP	BILL OF MATERIAL					JOB NO.	DRAWING NO.	REV.
									9	
PAGE	LINE	MARK	QTY	MARK	MATERIAL	LENGTH FT	LENGTH INCHES	REMARKS	WT	PROCUREMENT NOTES
		9G5C	1		GIRDER				27149	
1	L		1	wa	PL 3/4x59	58	6 7/8	M270-50WT2 (H2-3)		
1	N		1	wb	PL 3/4x59	47	9 1/2	M270-50WT2 (H2-3)		
1	E		1	ta	PL 7/8x16	59	7 7/8	M270-50WT2 (H2-3)		
1	G		1	tb	PL 7/8x16	46	7 9/16	M270-50WT2 (H2-3)		
1	E		1	ba	PL 7/8x16	59	7 7/8	M270-50WT2 (H2-3)		
1	G		1	bb	PL 7/8x16	46	7 9/16	M270-50WT2 (H2-3)		
2	H		1	x2d	PL 3/4x8 1/2	4	11 1/16	M1E BEV		
2	H		1	x2f	PL 3/4x8 1/2	4	11 1/16	M1E BEV		
2	J		2	x2h	PL 3/4x7	4	11	M1E		
2	M		7	x2p	PL 3/4x7	4	11			
2	T		1	x2ab	PL 1/4x2 7/8	0	11			

ONE - GIRDER - 9G5C

FOR FIELD SPLICE & STANDARD DETAILS SEE X SHEETS
FOR CAMBER & FLANGE DIAGRAM SEE SHEET C3
FOR GENERAL NOTES SEE SHEET GN1

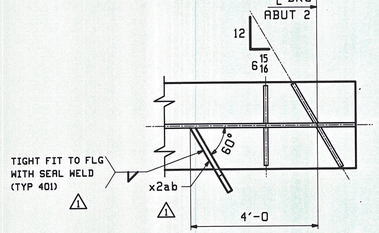

SECTION BA

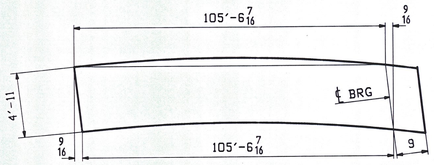

ORIENTATION DIAGRAM

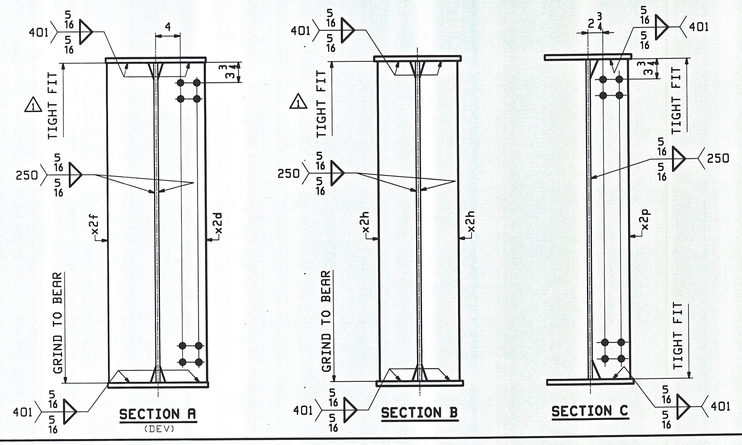

SECTION A (DEV)

SECTION B

SECTION C

NOTE A:
NO PAINT BOTTOM AND EDGES OF BOTTOM FLANGE.

RECEIVED
CK'D BY SSS CK'D BY MEM
NOV 15 2009
11/5/09

REV.	DATE	REMARKS	DWN	CHK	APVL	SHOP
1	10/19	REVISED PER APPROVAL	WJF	PCP	NOV 02 2009	
0					AUG 27 2009	

MATERIAL:	SURFACE PREP. & PAINT:	HOLES:	SHOP BOLTS:
M270-50W (UN)	SEE GN1	15/16"ø U.N.	NONE

DESCRIPTION: GIRDER - 9G5C

CASCO BAY STEEL STRUCTURES, INC.
75 SPRING HILL ROAD SACO, MAINE 04072
PHONE (207) 282-7360 FAX. (207) 282-1179
TENSOR 2906

STRUCTURE: US RTE 2 OVER WINOOSKI RIVER WASHINGTON COUNTY, VT	DRAWN: WJF	DATE: 08/13	
	CHKD: PCP	DATE: 08/17	
LOCATION: TOWNS OF MORETOWN ~ MIDDLESEX, VT	JOB NO.	DWG NO.	
PROJ NO. BRS 0284(14)	421-1	9	
CUSTOMER: WINTERSET INC.		REV. 1	

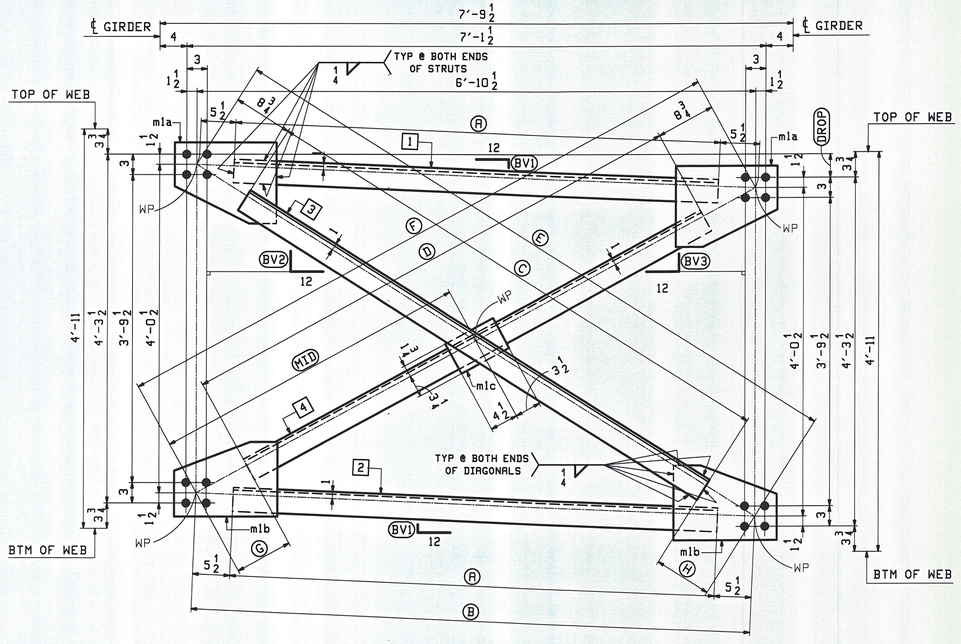

END CROSSFRAMES

LOOKING TOWARDS BACKWALL

MARK	QTY.	DROP	A	B	C	D	E	F	G	H	MID	BV1	BV2	BV3	1	2	3	4
10CF1	1	1 15/16	5'-11 1/2	6'-10 1/2	6'-7 1/2	6'-5 1/2	8'-0 3/4	7'-10 3/4	8 1/2	8 1/2	3'-11 3/8	5/16	7 5/16	6 3/4	a10	c10	f10	m10
10CF2	1	2 1/16	5'-11 1/2	6'-10 1/2	6'-7 1/2	6'-5 1/2	8'-0 13/16	7'-10 11/16	8 7/16	8 9/16	3'-11 3/8	5/16	7 3/8	6 3/4	a10	c10	f10	m10
10CF3	1	2 1/4	5'-11 1/2	6'-10 1/2	6'-7 3/4	6'-5 1/4	8'-0 7/8	7'-10 5/8	8 5/8	8 3/8	3'-11 5/16	5/16	7 3/8	6 3/4	a10	c10	g10	n10
10CF4	1	2 3/8	5'-11 9/16	6'-10 9/16	6'-7 3/4	6'-5 1/4	8'-0 15/16	7'-10 9/16	8 9/16	8 7/16	3'-11 1/4	3/8	7 3/8	6 11/16	b10	d10	g10	n10
10CF5	1	3	5'-11 9/16	6'-10 9/16	6'-8	6'-5	8'-1 1/4	7'-10 1/4	8 1/2	8 1/2	3'-11 1/8	7/16	7 1/2	6 5/8	b10	d10	h10	p10
10CF6	1	3 3/16	5'-11 9/16	6'-10 9/16	6'-8	6'-5	8'-1 3/8	7'-10 1/8	8 3/8	8 5/8	3'-11 1/16	7/16	7 1/2	6 9/16	b10	d10	h10	p10
10CF7	1	3 5/16	5'-11 9/16	6'-10 9/16	6'-8 1/4	6'-4 3/4	8'-1 7/16	7'-10 1/16	8 9/16	8 7/16	3'-11 1/16	1/2	7 9/16	6 9/16	b10	d10	k10	s10
10CF8	1	3 1/2	5'-11 9/16	6'-10 9/16	6'-8 1/4	6'-4 3/4	8'-1 9/16	7'-10	8 1/2	8 9/16	3'-11	1/2	7 9/16	6 9/16	b10	d10	k10	s10

ABM INFO PAGE	ABM INFO LINE	SHIP MARK	QTY	MARK	BILL OF MATERIAL — MATERIAL	LENGTH FT	LENGTH INCHES	REMARKS	WT	PROCUREMENT NOTES
		10CF5	1		ENT CROSSFRAMES				344	
3	B		1	b10	L 3 1/2 x 3 1/2 x 1/2	5	11 9/16	ASTM A270-50W		
3	C		1	d10	L 3 1/2 x 3 1/2 x 3/8	5	11 9/16	ASTM A270-50W		
3	D		1	h10	L 3 1/2 x 3 1/2 x 3/8	6	8	ASTM A270-50W		
3	E		1	p10	L 3 1/2 x 3 1/2 x 3/8	6	5	ASTM A270-50W		
3	F		2	mla	PL 9/16x12	1	3	ASTM A270-50W		
3	G		2	mlb	PL 9/16x11	1	3 1/4	ASTM A270-50W		
3	H		1	mlc	PL 9/16x5	0	8	ASTM A270-50W		
		10CF6	1		ENT CROSSFRAMES				344	
3	B		1	b10	L 3 1/2 x 3 1/2 x 1/2	5	11 9/16	ASTM A270-50W		
3	C		1	d10	L 3 1/2 x 3 1/2 x 3/8	5	11 9/16	ASTM A270-50W		
3	D		1	h10	L 3 1/2 x 3 1/2 x 3/8	6	8	ASTM A270-50W		
3	E		1	p10	L 3 1/2 x 3 1/2 x 3/8	6	5	ASTM A270-50W		
3	F		2	mla	PL 9/16x12	1	3	ASTM A270-50W		
3	G		2	mlb	PL 9/16x11	1	3 1/4	ASTM A270-50W		
3	H		1	mlc	PL 9/16x5	0	8	ASTM A270-50W		
		10CF7	1		ENT CROSSFRAMES				344	
3	B		1	b10	L 3 1/2 x 3 1/2 x 1/2	5	11 9/16	ASTM A270-50W		
3	C		1	d10	L 3 1/2 x 3 1/2 x 3/8	5	11 9/16	ASTM A270-50W		
3	D		1	k10	L 3 1/2 x 3 1/2 x 3/8	6	8 1/4	ASTM A270-50W		
3	E		1	s10	L 3 1/2 x 3 1/2 x 3/8	6	4 3/4	ASTM A270-50W		
3	F		2	mla	PL 9/16x12	1	3	ASTM A270-50W		
3	G		2	mlb	PL 9/16x11	1	3 1/4	ASTM A270-50W		
3	H		1	mlc	PL 9/16x5	0	8	ASTM A270-50W		
		10CF8	1		ENT CROSSFRAMES				344	
3	B		1	b10	L 3 1/2 x 3 1/2 x 1/2	5	11 9/16	ASTM A270-50W		
3	C		1	d10	L 3 1/2 x 3 1/2 x 3/8	5	11 9/16	ASTM A270-50W		
3	D		1	k10	L 3 1/2 x 3 1/2 x 3/8	6	8 1/4	ASTM A270-50W		
3	E		1	s10	L 3 1/2 x 3 1/2 x 3/8	6	4 3/4	ASTM A270-50W		
3	F		2	mla	PL 9/16x12	1	3	ASTM A270-50W		
3	G		2	mlb	PL 9/16x11	1	3 1/4	ASTM A270-50W		
3	H		1	mlc	PL 9/16x5	0	8	ASTM A270-50W		

ABM INFO PAGE	ABM INFO LINE	SHIP MARK	QTY	MARK	BILL OF MATERIAL — MATERIAL	LENGTH FT	LENGTH INCHES	REMARKS	WT	PROCUREMENT NOTES
		10CF1	1		ENT CROSSFRAMES				344	
3	B		1	a10	L 3 1/2 x 3 1/2 x 1/2	5	11 1/2	ASTM A270-50W		
3	C		1	c10	L 3 1/2 x 3 1/2 x 3/8	5	11 1/2	ASTM A270-50W		
3	D		1	f10	L 3 1/2 x 3 1/2 x 3/8	6	7 1/2	ASTM A270-50W		
3	E		1	m10	L 3 1/2 x 3 1/2 x 3/8	6	5 1/2	ASTM A270-50W		
3	F		2	mla	PL 9/16x12	1	3	ASTM A270-50W		
3	G		2	mlb	PL 9/16x11	1	3 1/4	ASTM A270-50W		
3	H		1	mlc	PL 9/16x5	0	8	ASTM A270-50W		
		10CF2	1		ENT CROSSFRAMES				344	
3	B		1	a10	L 3 1/2 x 3 1/2 x 1/2	5	11 1/2	ASTM A270-50W		
3	C		1	c10	L 3 1/2 x 3 1/2 x 3/8	5	11 1/2	ASTM A270-50W		
3	D		1	f10	L 3 1/2 x 3 1/2 x 3/8	6	7 1/2	ASTM A270-50W		
3	E		1	m10	L 3 1/2 x 3 1/2 x 3/8	6	5 1/2	ASTM A270-50W		
3	F		2	mla	PL 9/16x12	1	3	ASTM A270-50W		
3	G		2	mlb	PL 9/16x11	1	3 1/4	ASTM A270-50W		
3	H		1	mlc	PL 9/16x5	0	8	ASTM A270-50W		
		10CF3	1		ENT CROSSFRAMES				344	
3	B		1	a10	L 3 1/2 x 3 1/2 x 1/2	5	11 1/2	ASTM A270-50W		
3	C		1	c10	L 3 1/2 x 3 1/2 x 3/8	5	11 1/2	ASTM A270-50W		
3	D		1	g10	L 3 1/2 x 3 1/2 x 3/8	6	7 3/4	ASTM A270-50W		
3	E		1	n10	L 3 1/2 x 3 1/2 x 3/8	6	5 1/4	ASTM A270-50W		
3	F		2	mla	PL 9/16x12	1	3	ASTM A270-50W		
3	G		2	mlb	PL 9/16x11	1	3 1/4	ASTM A270-50W		
3	H		1	mlc	PL 9/16x5	0	8	ASTM A270-50W		
		10CF4	1		ENT CROSSFRAMES				344	
3	B		1	b10	L 3 1/2 x 3 1/2 x 1/2	5	11 9/16	ASTM A270-50W		
3	C		1	d10	L 3 1/2 x 3 1/2 x 3/8	5	11 9/16	ASTM A270-50W		
3	D		1	g10	L 3 1/2 x 3 1/2 x 3/8	6	7 3/4	ASTM A270-50W		
3	E		1	n10	L 3 1/2 x 3 1/2 x 3/8	6	5 1/4	ASTM A270-50W		
3	F		2	mla	PL 9/16x12	1	3	ASTM A270-50W		
3	G		2	mlb	PL 9/16x11	1	3 1/4	ASTM A270-50W		
3	H		1	mlc	PL 9/16x5	0	8	ASTM A270-50W		

NOTES:
FOR GENERAL NOTES SEE DRAWING GN1.

RECEIVED
BY SSS OK'D BY
NOV 4 5 2
11/5/09

REV.	DATE	REMARKS	DWN	CHK	APVL	SHOP
					NOV 02 2009	
0		~			AUG 27 2009	

MATERIAL:	SURFACE PREP. & PAINT:	HOLES:	SHOP BOLTS:
M270-50W (UN)	SEE GN1	15/16" ø U.N.	NONE

DESCRIPTION: END CROSSFRAMES

CASCO BAY STEEL STRUCTURES, INC.
75 SPRING HILL ROAD SACO, MAINE 04072
PHONE (207) 282-7360 FAX. (207) 282-1179
TENSOR 2906

STRUCTURE: US RTE 2 OVER WINOOSKI RIVER, WASHINGTON COUNTY, VT	DRAWN: TS	DATE: 08/12
	CHKD: PCP	DATE: 08/19
LOCATION: TOWNS OF MORETOWN ~ MIDDLESEX, VT	JOB NO. 421-1	DWG NO. 10
PROJ NO. BRS 0284(14)		REV. △
CUSTOMER: WINTERSET INC.		

PCP Thu, Aug 20, 2009 09:01:15 PM c:\work\jobs\2906\10\10-Rev0

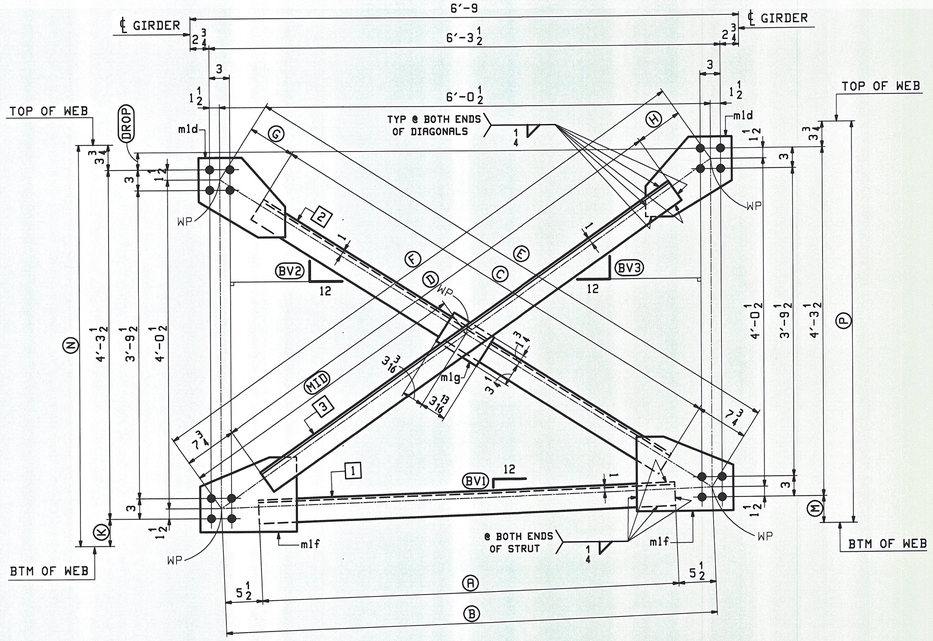
℄ GIRDER
6'-9
6'-3 1/2
6'-0 1/2
℄ GIRDER
TOP OF WEB
TOP OF WEB
DROP
mld
TYP @ BOTH ENDS OF DIAGONALS
1/4
WP
BV2
12
BV3
12
MID
mlg
3 3/16
3 3/16
7 3/4
7 3/4
BV1
12
@ BOTH ENDS OF STRUT
1/4
mlf
mlf
WP
WP
BTM OF WEB
BTM OF WEB
5 1/2
5 1/2
4'-3 1/2
3'-9 1/2
4'-0 1/2
4'-0 1/2
3'-9 1/2
4'-3 1/2
3 1/2
1 1/2
2 3/4
3
1 1/2
3
3
3

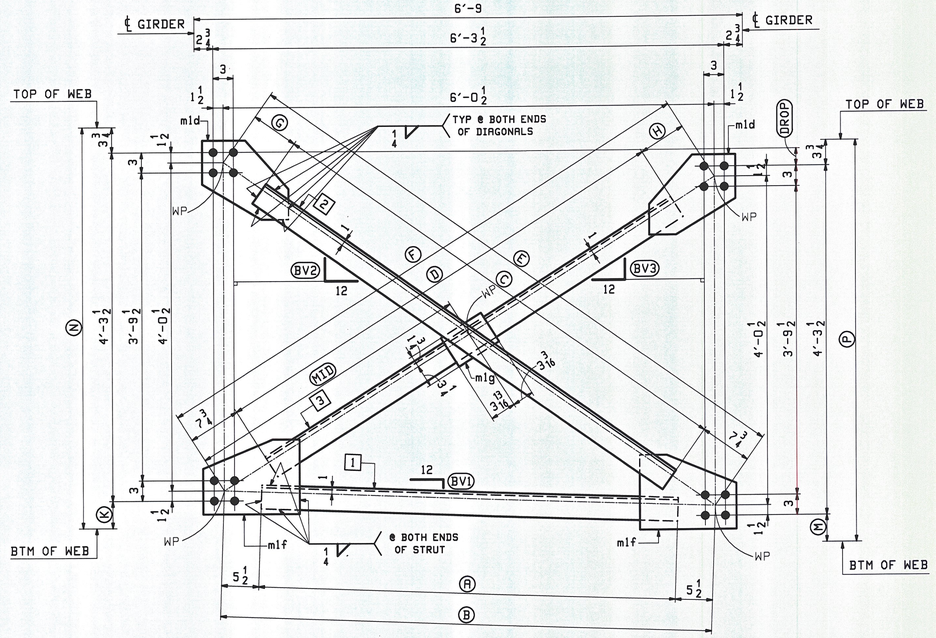

INT CROSSFRAMES - TYPE "CF1"

LOOKING UPSTATION

NO PAINT

MARK	QTY.	DROP	A	B	C	D	E	F	G	H	K	M	N	P	MID	BV1	BV2	BV3	1	2	3
12CF1	4	9/16	5'-1 1/2	6'-0 1/2	6'-0 3/4	6'-0 1/4	7'-3 9/16	7'-2 15/16	7 1/16	6 15/16	4 9/16	6 9/16	4'-11 13/16	5'-1 13/16	3'-7 1/2	1/16	8 1/8	7 15/16	a12	c12	m12
12CF2	4	13/16	5'-1 1/2	6'-0 1/2	6'-1	6'-0	7'-3 11/16	7'-2 3/4	6 15/16	7	3 3/4	3 3/4	4'-11	4'-11	3'-7 3/8	1/8	8 3/16	7 7/8	a12	d12	n12
12CF3	4	1 1/16	5'-1 1/2	6'-0 1/2	6'-1	5'-11 3/4	7'-3 13/16	7'-2 5/8	7 1/16	7 1/8	3 3/4	3 3/4	4'-11	4'-11	3'-7 5/16	3/16	8 3/16	7 7/8	a12	d12	p12
12CF4	4	1 5/16	5'-1 1/2	6'-0 1/2	6'-1 1/4	5'-11 3/4	7'-3 15/16	7'-2 1/2	6 15/16	7	3 3/4	3 3/4	4'-11	4'-11	3'-7 1/4	3/16	8 1/4	7 13/16	a12	g12	p12
12CF5	4	1 9/16	5'-1 1/2	6'-0 1/2	6'-1 1/2	5'-11 1/2	7'-4 1/8	7'-2 3/8	6 7/8	7 1/8	3 3/4	3 3/4	4'-11	4'-11	3'-7 3/16	1/4	8 5/16	7 3/4	a12	h12	s12
12CF6	4	1 13/16	5'-1 1/2	6'-0 1/2	6'-1 1/2	5'-11 1/2	7'-4 1/4	7'-2 1/4	7	7	3 3/4	3 3/4	4'-11	4'-11	3'-7 1/8	5/16	8 5/16	7 3/4	a12	h12	s12
12CF7	4	2 1/8	5'-1 1/2	6'-0 1/2	6'-1 3/4	5'-11 1/4	7'-4 7/16	7'-2 1/16	6 15/16	7 1/16	3 3/4	3 3/4	4'-11	4'-11	3'-7 1/16	3/8	8 3/8	7 11/16	a12	k12	t12
12CF8	4	2 3/8	5'-1 9/16	6'-0 9/16	6'-1 3/4	5'-11 1/4	7'-4 9/16	7'-1 15/16	7 1/16	6 15/16	3 3/4	3 3/4	4'-11	4'-11	3'-6 15/16	3/8	8 7/16	7 5/8	b12	k12	t12

ABM INFO PAGE	ABM INFO LINE	SHIP MARK	QTY	MARK	MATERIAL	LENGTH FT	LENGTH INCHES	REMARKS	WT	PROCUREMENT NOTES
		12CF5	4		ENT CROSSFRAMES				249	
3	K		4	a12	L 3 1/2 x 3 1/2 x 3/8	5	1 1/2	M270-50W		
3	L		4	h12	L 3 1/2 x 3 1/2 x 3/8	6	1 1/2	M270-50W		
3	L		4	s12	L 3 1/2 x 3 1/2 x 3/8	5	11 1/2	M270-50W		
3	M		8	mld	PL 9/16x11 3/4	1	0 3/4	M270-50W		
3	N		8	mlf	PL 9/16x11	1	2 3/8	M270-50W		
3	P		4	mlg	PL 9/16x5	0	7	M270-50W		
		12CF6	4		ENT CROSSFRAMES				249	
3	K		4	a12	L 3 1/2 x 3 1/2 x 3/8	5	1 1/2	M270-50W		
3	L		4	h12	L 3 1/2 x 3 1/2 x 3/8	6	1 1/2	M270-50W		
3	L		4	s12	L 3 1/2 x 3 1/2 x 3/8	5	11 1/2	M270-50W		
3	M		8	mld	PL 9/16x11 3/4	1	0 3/4	M270-50W		
3	N		8	mlf	PL 9/16x11	1	2 3/8	M270-50W		
3	P		4	mlg	PL 9/16x5	0	7	M270-50W		
		12CF7	4		ENT CROSSFRAMES				249	
3	K		4	a12	L 3 1/2 x 3 1/2 x 3/8	5	1 1/2	M270-50W		
3	L		4	k12	L 3 1/2 x 3 1/2 x 3/8	6	1 1/4	M270-50W		
3	L		4	t12	L 3 1/2 x 3 1/2 x 3/8	5	11 1/4	M270-50W		
3	M		8	mld	PL 9/16x11 3/4	1	0 3/4	M270-50W		
3	N		8	mlf	PL 9/16x11	1	2 3/8	M270-50W		
3	P		4	mlg	PL 9/16x5	0	7	M270-50W		
		12CF8	4		ENT CROSSFRAMES				249	
3	K		4	b12	L 3 1/2 x 3 1/2 x 3/8	5	1 9/16	M270-50W		
3	L		4	k12	L 3 1/2 x 3 1/2 x 3/8	6	1 3/4	M270-50W		
3	L		4	t12	L 3 1/2 x 3 1/2 x 3/8	5	11 1/4	M270-50W		
3	M		8	mld	PL 9/16x11 3/4	1	0 3/4	M270-50W		
3	N		8	mlf	PL 9/16x11	1	2 3/8	M270-50W		
3	P		4	mlg	PL 9/16x5	0	7	M270-50W		

ABM INFO PAGE	ABM INFO LINE	SHIP MARK	QTY	MARK	MATERIAL	LENGTH FT	LENGTH INCHES	REMARKS	WT	PROCUREMENT NOTES
		12CF1	4		ENT CROSSFRAMES				249	
3	K		4	a12	L 3 1/2 x 3 1/2 x 3/8	5	1 1/2	M270-50W		
3	L		4	c12	L 3 1/2 x 3 1/2 x 3/8	6	0 1/4	M270-50W		
3	L		4	m12	L 3 1/2 x 3 1/2 x 3/8	6	0 1/4	M270-50W		
3	M		8	mld	PL 9/16x11 3/4	1	0 1/4	M270-50W		
3	N		8	mlf	PL 9/16x11	1	2 3/8	M270-50W		
3	P		4	mlg	PL 9/16x5	0	7	M270-50W		
		12CF2	4		ENT CROSSFRAMES				249	
3	K		4	a12	L 3 1/2 x 3 1/2 x 3/8	5	1 1/2	M270-50W		
3	L		4	d12	L 3 1/2 x 3 1/2 x 3/8	6	1	M270-50W		
3	L		4	n12	L 3 1/2 x 3 1/2 x 3/8	6	0	M270-50W		
3	M		8	mld	PL 9/16x11 3/4	1	0 3/4	M270-50W		
3	N		8	mlf	PL 9/16x11	1	2 3/8	M270-50W		
3	P		4	mlg	PL 9/16x5	0	7	M270-50W		
		12CF3	4		ENT CROSSFRAMES				249	
3	K		4	a12	L 3 1/2 x 3 1/2 x 3/8	5	1 1/2	M270-50W		
3	L		4	d12	L 3 1/2 x 3 1/2 x 3/8	6	1	M270-50W		
3	L		4	p12	L 3 1/2 x 3 1/2 x 3/8	5	11 1/2	M270-50W		
3	M		8	mld	PL 9/16x11 3/4	1	0 3/4	M270-50W		
3	N		8	mlf	PL 9/16x11	1	2 3/8	M270-50W		
3	P		4	mlg	PL 9/16x5	0	7	M270-50W		
		12CF4	4		ENT CROSSFRAMES				249	
3	K		4	a12	L 3 1/2 x 3 1/2 x 3/8	5	1 1/2	M270-50W		
3	L		4	g12	L 3 1/2 x 3 1/2 x 3/8	6	1 1/4	M270-50W		
3	L		4	p12	L 3 1/2 x 3 1/2 x 3/8	5	11 1/4	M270-50W		
3	M		8	mld	PL 9/16x11 3/4	1	0 3/4	M270-50W		
3	N		8	mlf	PL 9/16x11	1	2 3/8	M270-50W		
3	P		4	mlg	PL 9/16x5	0	7	M270-50W		

NOTES:
FOR GENERAL NOTES SEE DRAWING GN1.

RECEIVED NOV 02 2009 AUG 27 2009
CKD BY SSS CKD BY
11/5/09

REV.	DATE	REMARKS	DWN	CHK	APVL	SHOP
0						

MATERIAL:	SURFACE PREP. & PAINT:	HOLES:	SHOP BOLTS:
M270-50W (UN)	SEE GN1	15/16" ø U.N.	NONE

DESCRIPTION: INTERMEDIATE CROSSFRAMES

CASCO BAY STEEL STRUCTURES, INC.
75 SPRING HILL ROAD SACO, MAINE 04072
PHONE (207) 282-7360 FAX. (207) 282-1179
TENSOR 2906

STRUCTURE: US RTE 2 OVER WINOOSKI RIVER WASHINGTON COUNTY, VT	DRAWN: TS	DATE: 08/13	
	CHKD: PCP	DATE: 08/19	
LOCATION: TOWNS OF MORETOWN ~ MIDDLESEX, VT	JOB NO. 421-1	DWG NO. 12	
PROJ NO. BRS 0284(14)		REV. △	
CUSTOMER: WINTERSET INC.			

PCP Thu, Aug 20, 2009 09:05:31 AM c:\work\jobs\2009\12 1 Rev0

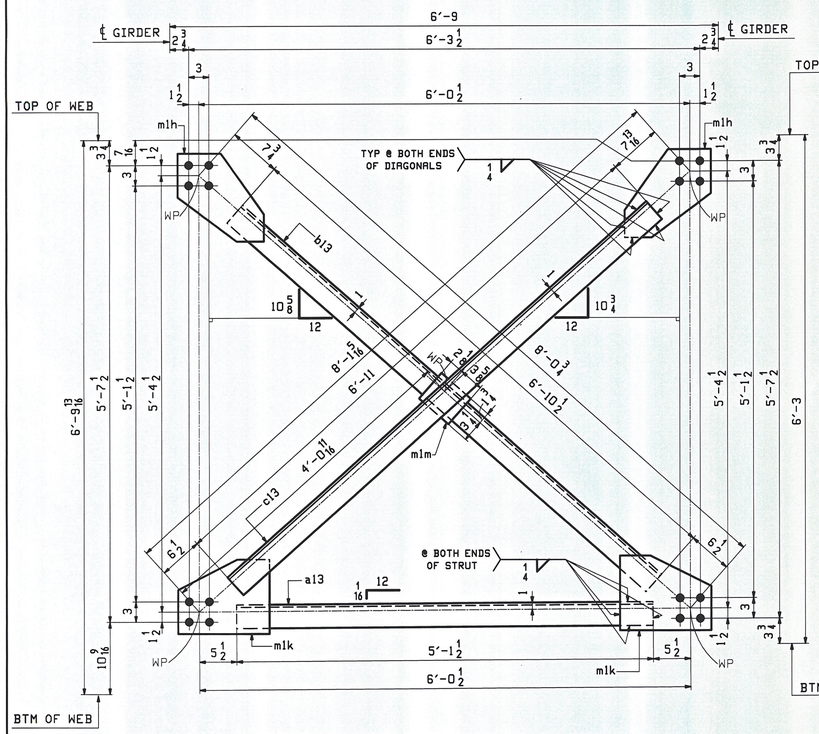

4 - INT CROSSFRAMES TYPE2 ~ 13CF1

LOOKING UPSTATION

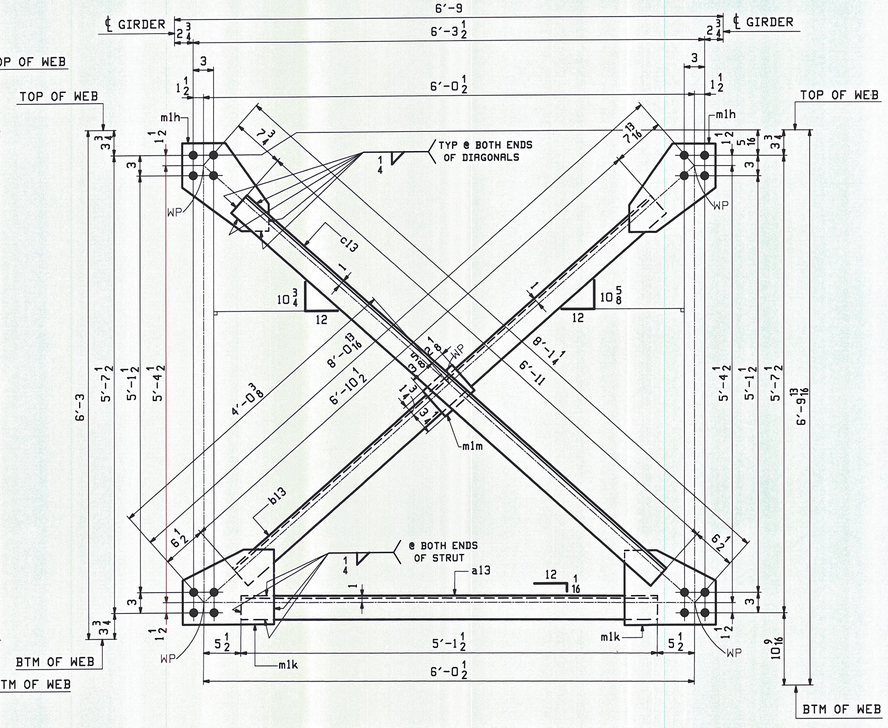

4 - INT CROSSFRAMES TYPE2 ~ 13CF2

LOOKING UPSTATION

ABM INFO		SHIP	BILL OF MATERIAL					JOB NO.	DRAWING NO.	REV.
									13	
PAGE	LINE	MARK	QTY	MARK	MATERIAL	LENGTH FT	LENGTH INCHES	REMARKS	WT	PROCUREMENT NOTES
		13CF1	4		INT CROSSFRAMES				265	
3	R		4	a13	L 3 1/2 x 3 1/2 x 3/8	5	1 1/2	M270-50W		
3	S		4	b13	L 3 1/2 x 3 1/2 x 3/8	6	10 1/2	M270-50W		
3	S		4	c13	L 3 1/2 x 3 1/2 x 3/8	6	11	M270-50W		
3	T		8	m1h	PL 9/16 x 12 3/4	1	1	M270-50W		
3	V		8	m1k	PL 9/16 x 11	1	1 1/2	M270-50W		
3	W		4	m1m	PL 9/16 x 5	0	5 3/4	M270-50W		
		13CF2	4		INT CROSSFRAMES				265	
3	R		4	a13	L 3 1/2 x 3 1/2 x 3/8	5	1 1/2	M270-50W		
3	S		4	b13	L 3 1/2 x 3 1/2 x 3/8	6	10 1/2	M270-50W		
3	S		4	c13	L 3 1/2 x 3 1/2 x 3/8	6	11	M270-50W		
3	T		8	m1h	PL 9/16 x 12 3/4	1	1	M270-50W		
3	V		8	m1k	PL 9/16 x 11	1	1 1/2	M270-50W		
3	W		4	m1m	PL 9/16 x 5	0	5 3/4	M270-50W		

NOTES:
FOR GENERAL NOTES SEE DRAWING GN1.

REV.	DATE	REMARKS	DWN	CHK	APVL	SHOP
					NOV 0 2 2009	
0					AUG 2 7 2009	

MATERIAL:	SURFACE PREP. & PAINT:	HOLES:	SHOP BOLTS:
M270-50W (UN)	SEE GN1	15/16"ø U.N.	NONE

DESCRIPTION: INTERMEDIATE CROSSFRAMES

CASCO BAY STEEL STRUCTURES, INC.
75 SPRING HILL ROAD SACO, MAINE 04072
PHONE (207) 282-7360 FAX. (207) 282-1179
TENSOR 2906

STRUCTURE: US RTE 2 OVER WINOOSKI RIVER WASHINGTON COUNTY, VT	DRAWN: TS	DATE: 08/14
	CHKD: PCP	DATE: 08/19
LOCATION: TOWNS OF MORETOWN ~ MIDDLESEX, VT	JOB NO.	DWG NO.
PROJ NO. BRS 0284(14)	421-1	13
CUSTOMER: WINTERSET INC.		REV. △

RECEIVED
OK'D BY SSS OK'D BY MRM
11/5/09

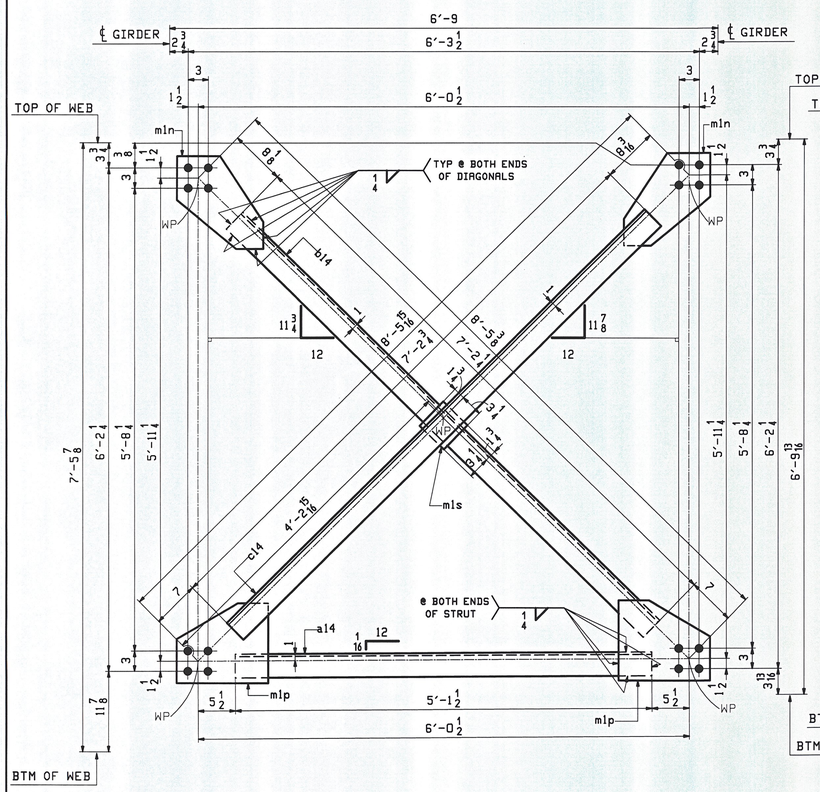

4 - INT CROSSFRAMES TYPE3 ~ 14CF1

LOOKING UPSTATION

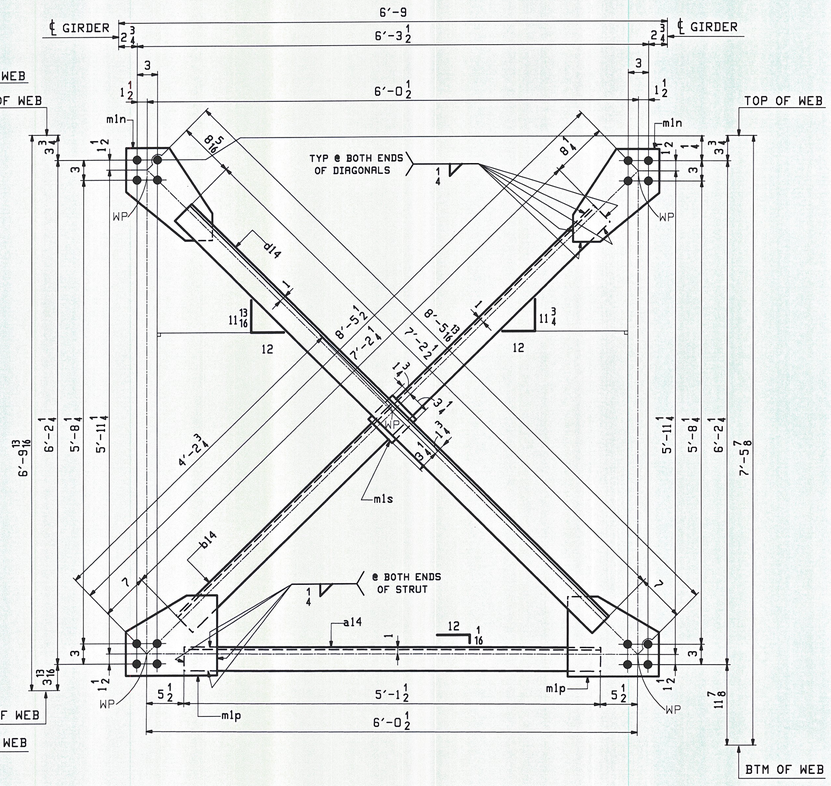

4 - INT CROSSFRAMES TYPE3 ~ 14CF2

LOOKING UPSTATION

ABM INFO		SHIP	BILL OF MATERIAL					JOB NO.	DRAWING NO.	REV.
									14	
PAGE	LINE	MARK	QTY	MARK	MATERIAL	LENGTH FT	LENGTH INCHES	REMARKS	WT	PROCUREMENT NOTES
		14CF1	4		INT CROSSFRAMES				276	
4	B		4	a14	L 3 1/2 x 3 1/2 x 3/8	5	1 1/2	M270-50W		
4	C		4	b14	L 3 1/2 x 3 1/2 x 3/8	7	2 1/4	M270-50W		
4	C		4	c14	L 3 1/2 x 3 1/2 x 3/8	7	2 3/4	M270-50W		
4	D		8	m1n	PL 9/16 x 12 3/4	1	1 3/4	M270-50W		
4	E		8	m1p	PL 9/16 x 11 3/4	1	1 1/2	M270-50W		
4	F		4	m1s	PL 9/16 x 5	0	5	M270-50W		
		14CF2	4		INT CROSSFRAMES				276	
4	B		4	a14	L 3 1/2 x 3 1/2 x 3/8	5	1 1/2	M270-50W		
4	C		4	b14	L 3 1/2 x 3 1/2 x 3/8	7	2 1/4	M270-50W		
4	C		4	d14	L 3 1/2 x 3 1/2 x 3/8	7	2 1/2	M270-50W		
4	D		8	m1n	PL 9/16 x 12 3/4	1	1 3/4	M270-50W		
4	E		8	m1p	PL 9/16 x 11 3/4	1	1 1/2	M270-50W		
4	F		4	m1s	PL 9/16 x 5	0	5	M270-50W		

NOTES:
FOR GENERAL NOTES SEE DRAWING GN1.

REV.	DATE	REMARKS	DWN	CHK	APVL	SHOP
0					NOV 0 2 2009 AUG 2 7 2009	

MATERIAL:	SURFACE PREP. & PAINT:	HOLES:	SHOP BOLTS:
M270-50W (UN)	SEE GN1	15/16"ø U.N.	NONE

DESCRIPTION: INTERMEDIATE CROSSFRAMES

CASCO BAY STEEL STRUCTURES, INC.
75 SPRING HILL ROAD SACO, MAINE 04072
PHONE (207) 282-7360 FAX. (207) 282-1179
TENSOR 2906

STRUCTURE: US RTE 2 OVER WINOOSKI RIVER WASHINGTON COUNTY, VT	DRAWN: TS	DATE: 08/17
	CHKD: PCP	DATE: 08/19
LOCATION: TOWNS OF MORETOWN ~ MIDDLESEX, VT	JOB NO.	DWG NO.
PROJ NO. BRS 0284(14)	421-1	14
CUSTOMER: WINTERSET INC.		REV. △

RECEIVED
11/5/09

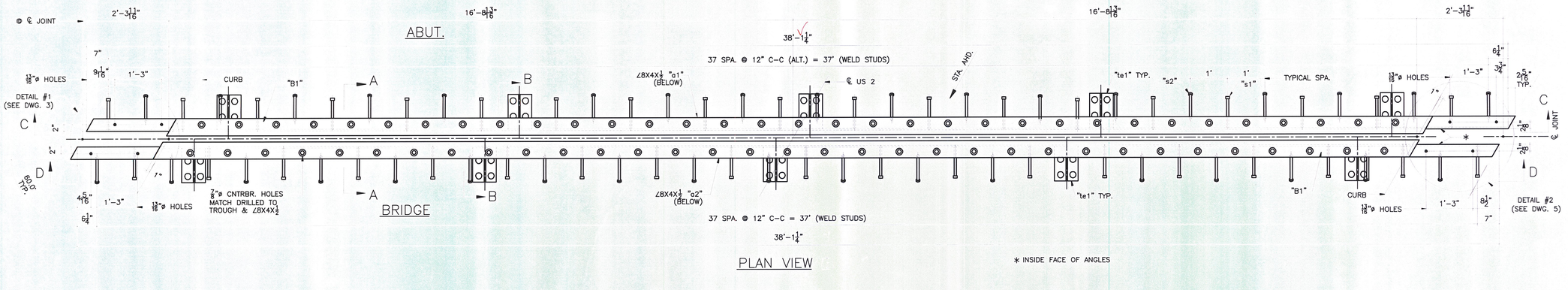

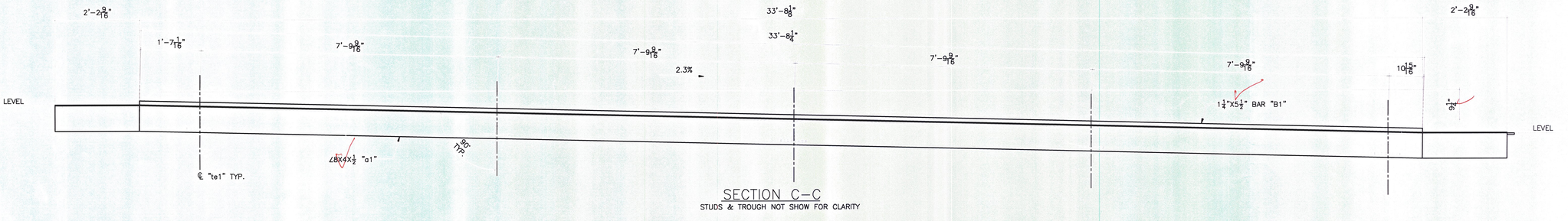

SECTION C–C
STUDS & TROUGH NOT SHOW FOR CLARITY

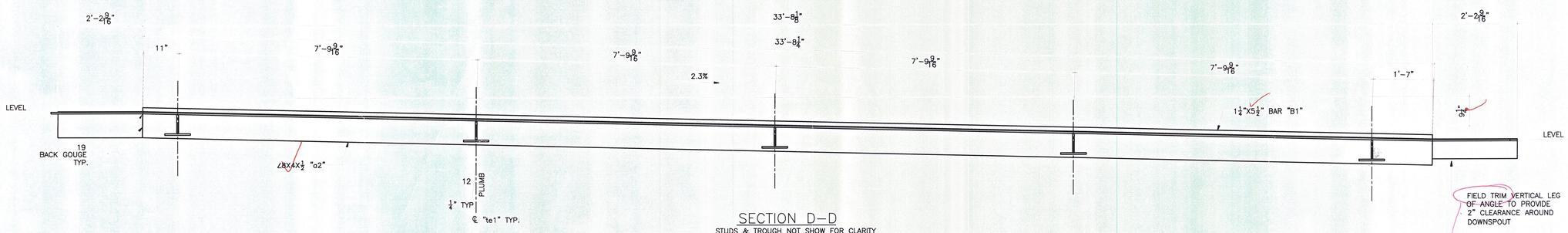

SECTION D–D
STUDS & TROUGH NOT SHOW FOR CLARITY

ONE REQ'D EXPANSION JOINT @ ABUT. #1, MARK "EJ1"
DIMENSIONS SHOWN ARE ALONG INSIDE FACE OF ANGLE U.O.N.

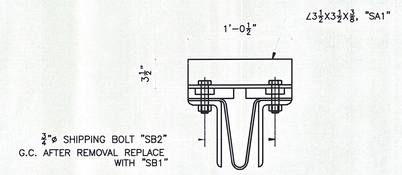

TYPICAL SHIPPING DEVICE
(SPA. @ 6'-0" C-C MIN. 5 TOTAL REQUIRED)

RECEIVED
CK'D BY SSS OK'D BY Mfm
JAN 20 2010
RESUBMIT ____ APPROVED AS NOTED
BY DATE 2/5/2010

NOTES:

1. THE EXPANSION JOINT SHALL BE SHOP ASSEMBLED AND SHIPPED AS ONE UNIT. SHOP TO LOCATE AND ATTACH TEMPORARY SHIPPING DEVICES AS REQ'D.
2. ALL EXPOSED CUT OR SHEARED EDGES SHALL BE ROUNDED TO A 1/16" RADIUS AND BE FREE OF BURRS PRIOR TO GALVANIZING.
3. Seal weld all connections, where possible, prior to galvanizing

SEE DWG. 7 FOR SECTIONS NOT SHOWN
SEE DWG. 8 FOR TROUGH

ERECTION BOLTS W/H.H.N.				WASHERS		FINISH
QUAN.	SIZE	LENGTH	TYPE	FLAT	BEV.	GALV. AASHTO M232

FINISH	HOT DIPPED GALVANIZED
MATERIAL	AASHTO M270 GR. 36
HOLES	AS NOTED
ELECTRODES	PER W.P.S.
WELDS	AS NOTED
SURFACE PREP	SSPC-SP8

FOR APPROVAL ONLY

NO	DATE	DESCRIPTION	BY
		REVISIONS	

ARC ENTERPRISES, INC.
ADVANCED RESOURCES & CONST. ENTERPRISES, INCORPORATED
P.O. BOX 120 KINGFIELD, ME. 04947
PHONE: (207) 265-2646 – FAX: (207) 265-4054

DRAFTER	JAC
DATE	1/8/10
CHECKED	MTD
JOB	#09-200

EXPANSION JOINT DETAILS
VERMONT AGENCY OF TRANSPORTATION, TOWNS OF MORETOWN-MIDDLESEX, U.S. RTE. 2 MAJOR COLL.
G.C. WINTERSET, INC.

PROJECT NO. BRS 0284(14)
DWG. NO. 1

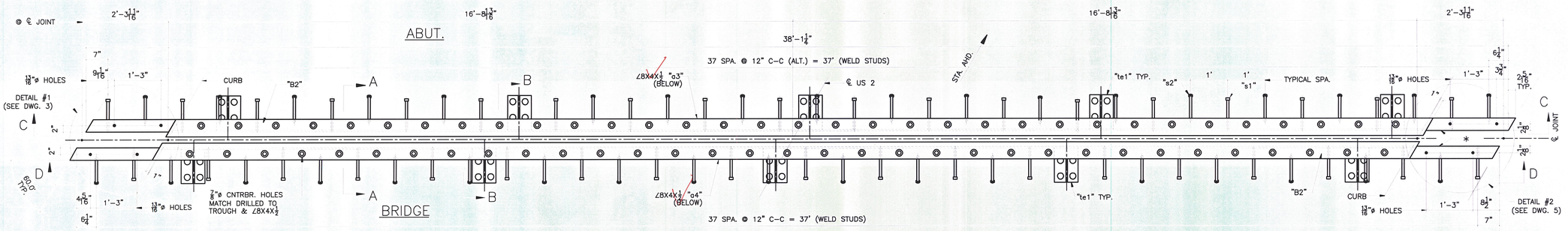

PLAN VIEW

* INSIDE FACE OF ANGLES

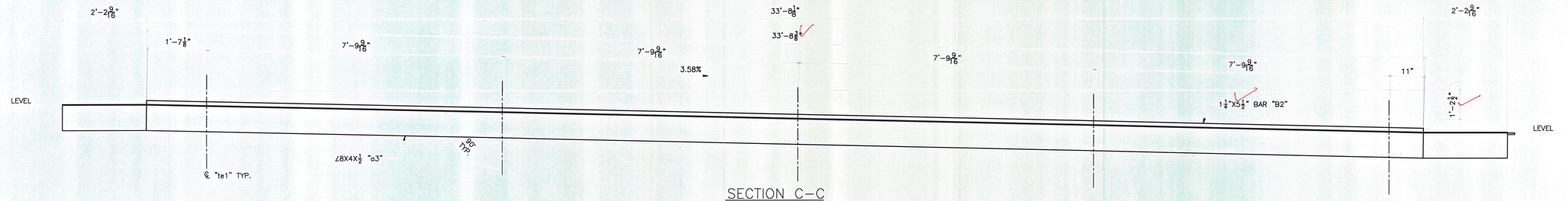

SECTION C-C

STUDS & TROUGH NOT SHOW FOR CLARITY

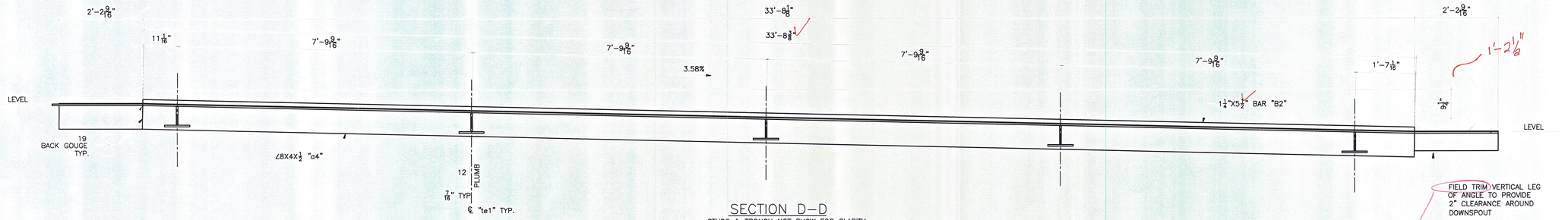

SECTION D-D

STUDS & TROUGH NOT SHOW FOR CLARITY

ONE REQ'D EXPANSION JOINT @ ABUT. #2, MARK "EJ2"

DIMENSIONS SHOWN ARE ALONG INSIDE FACE OF ANGLE U.O.N.

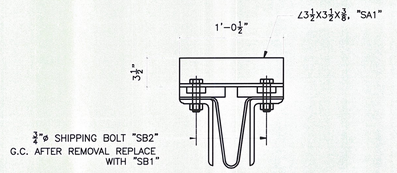

TYPICAL SHIPPING DEVICE

(SPA. @ 6'-0" C-C MIN. 5 TOTAL REQUIRED)

RECEIVED
CK'D BY SSS OK'D BY MGM
JAN 20 2010
RESUBMIT ____ APPROVED As Noted
BY DATE 2/5/2010

NOTES:

1. THE EXPANSION JOINT SHALL BE SHOP ASSEMBLED AND SHIPPED AS ONE UNIT. SHOP TO LOCATE AND ATTACH TEMPORARY SHIPPING DEVICES AS REQ'D.
2. ALL EXPOSED CUT OR SHEARED EDGES SHALL BE ROUNDED TO A 1/16" RADIUS AND BE FREE OF BURRS PRIOR TO GALVANIZING.

SEE DWG. 7 FOR SECTIONS NOT SHOWN
SEE DWG. 8 FOR TROUGH

ERECTION BOLTS W/H.H.N.				WASHERS		FINISH
QUAN.	SIZE	LENGTH	TYPE	FLAT	BEV.	GALV. AASHTO M232

FINISH	HOT DIPPED GALVANIZED
MATERIAL	AASHTO M270 GR. 36
HOLES	AS NOTED
ELECTRODES	PER W.P.S.
WELDS	AS NOTED
SURFACE PREP	SSPC-SP8

FOR APPROVAL ONLY

NO	DATE	DESCRIPTION	BY

REVISIONS

ARC
ADVANCED RESOURCES & CONST. ENTERPRISES, INCORPORATED
P.O. BOX 120 KINGFIELD, ME. 04947
PHONE: (207) 265-2646 – FAX: (207) 265-4054

DRAFTER	JAC	EXPANSION JOINT DETAILS	PROJECT NO. BRS 0284(14)
DATE	1/8/10	VERMONT AGENCY OF TRANSPORTATION, TOWNS OF MORETOWN-MIDDLESEX, U.S. RTE. 2 MAJOR COLL.	DWG. NO. 2
CHECKED	MTD	G.C. WINTERSET, INC.	
JOB	#09-200		

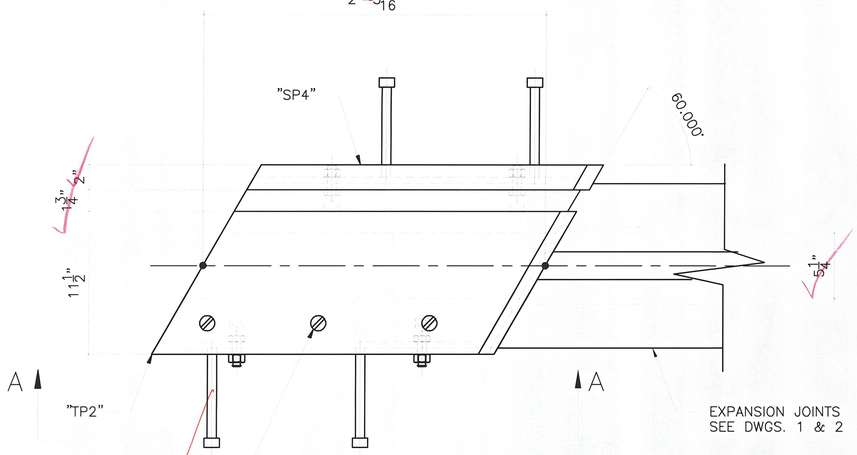

DETAIL #1

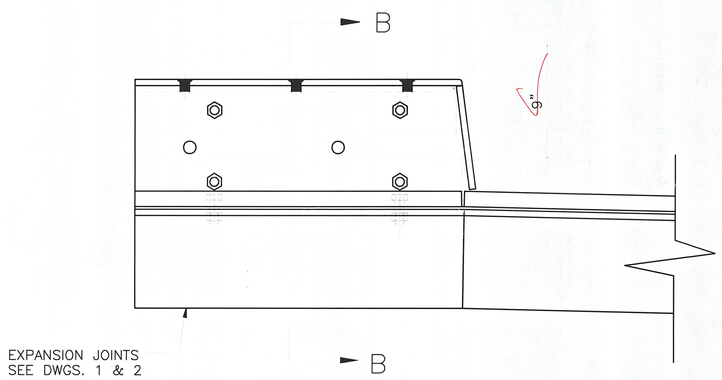

SECTION A–A

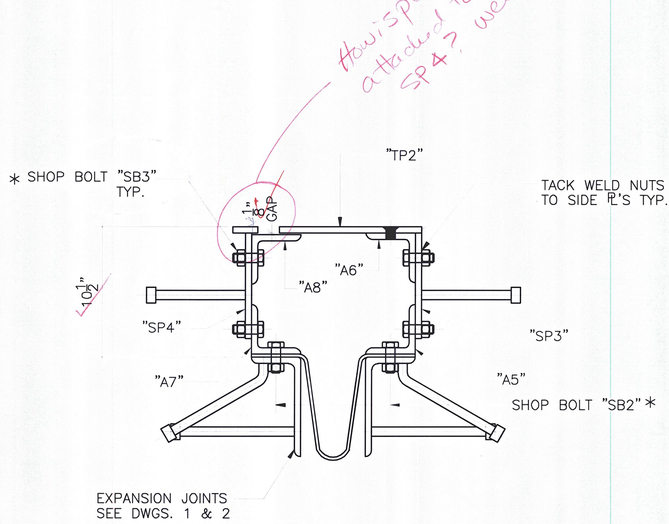

SECTION B–B

* SHOP NOTE:
MATCH DRILL HOLES AS REQ'D

WORK THIS DWG. WITH DWG. 4

BILL OF MATERIAL

SHIP	SHIP MARK	NO. PCS.	PIECE MARK	DESCRIPTION	LENGTH	REMARKS	MAT'L
		2	TP2	TOP PL ASS'Y			
		2	tp2a	PL 1/2X11 1/2	2'-9 1/16		
		2	tp2b	PL 1/2X8 3/8	1'-1 7/8		
		2	SP3	SIDE PL ASS'Y			
		2	sp3a	PL 1/2X8 1/2	2'-3 1/16		
		4	s3	3/4"ø CONC. STUD	0'-8		
		2	SP4	SIDE PL ASS'Y			
		2	sp4a	PL 1/2X2	2'-3 7/16		
		2	sp4b	PL 1/2X2 15/16	0'-8 8/16		
		2	sp4c	PL 1/2X8 1/2	2'-3 1/16		
		4	s3	3/4"ø CONC. STUD	0'-8		
		2	A5	∠4X4X1/2	2'-4 3/4		
		2	A6	∠4X4X1/2	2'-4 9/16		
		2	A7	∠4X4X1/2	2'-4 5/16		
		2	A8	ANGLE ASS'Y			
		2	A8a	∠4X4X1/2	2'-4 3/16		
		2	A8pa	PL 1/2X5 3/16	0'-8 1/4		
		8	SB2	3/4"ø BOLT	0'-2 1/2	A325	
		16	SB3	3/4"ø BOLT	0'-2 1/4	A325	
		6	CS1	3/4"ø F.H. SCREW	0'-1 1/4	A325	

ERECTION BOLTS W/H.H.N.				WASHERS		FINISH
QUAN.	SIZE	LENGTH	TYPE	FLAT	BEV.	GALV. AASHTO M232

FINISH	HOT DIPPED GALVANIZED
MATERIAL	AASHTO M270 GR. 36
HOLES	13/16"ø U.O.N.
ELECTRODES	PER W.P.S.
WELDS	AS NOTED
SURFACE PREP	SSPC–SP8

NO	DATE	DESCRIPTION	BY
		FOR APPROVAL ONLY	

REVISIONS

RECEIVED
CK'D BY SSS CK'D BY MJM
JAN 2 C 2010
RESUBMT ____ APPROVED As Noted
BY DATE 2/5/2010

ARC ENTERPRISES, INC.

ADVANCED RESOURCES & CONST. ENTERPRISES, INCORPORATED
P.O. BOX 120 KINGFIELD, ME. 04947
PHONE: (207) 265-2646 – FAX: (207) 265-4054

DRAFTER	JAC
DATE	1/8/10
CHECKED	MTD
JOB	#09-200

EXPANSION JOINT DETAILS
VERMONT AGENCY OF TRANSPORTATION,
TOWNS OF MORETOWN–MIDDLESEX, U.S. RTE. 2 MAJOR COLL.
G.C. WINTERSET, INC.

PROJECT NO. BRS 0284(14)
DWG. NO. 3

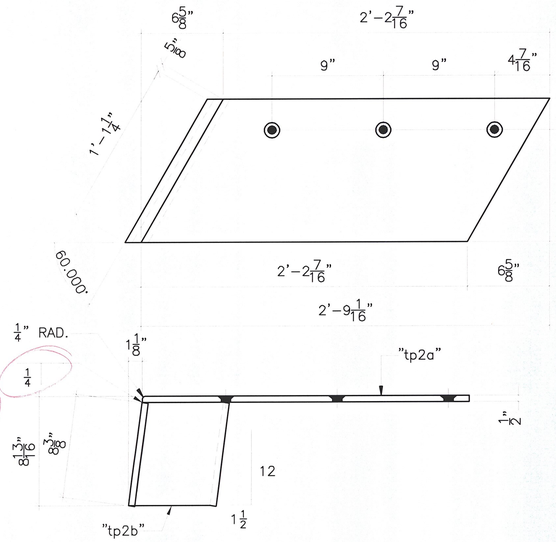

2-TOP PL ASS'Y, MARK "TP2"

DRILL & CNTRSK
FOR 3/4"ø F.H. SCREWS

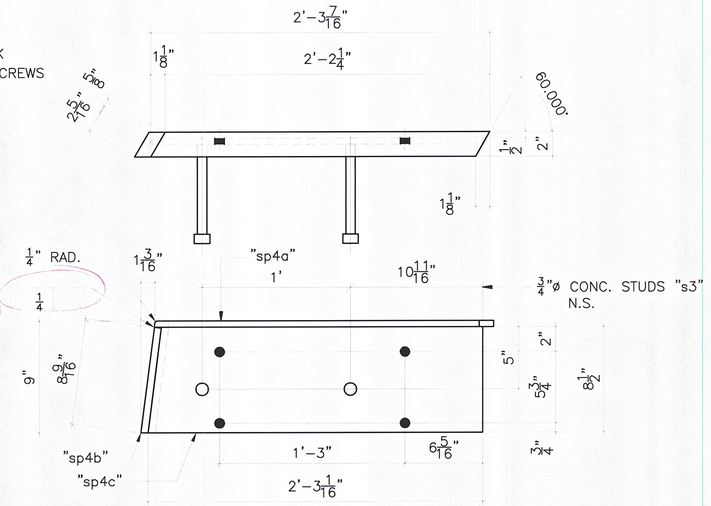

Weld Symbol Shown incorrectly

2-SIDE PL ASS'Y MARK "SP4"

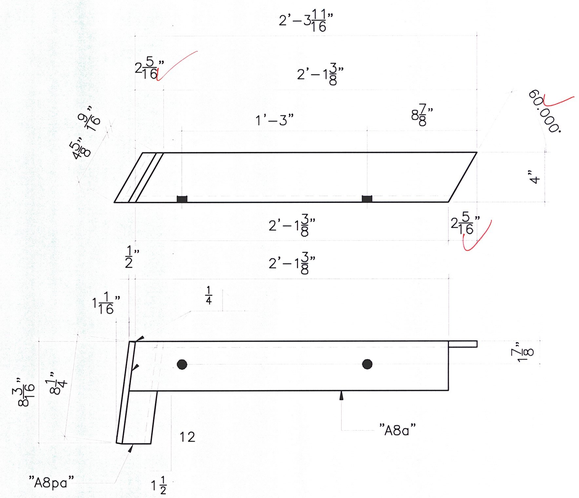

2-∠4X4X1/2 ASS'Y MARK "A8"

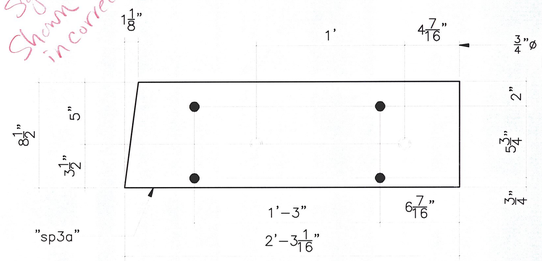

2-SIDE PL ASS'Y, MARK "SP3"

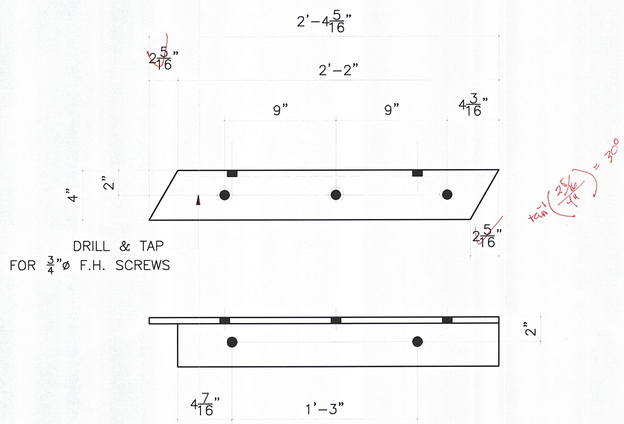

2-∠4X4X1/2, MARK "A6"

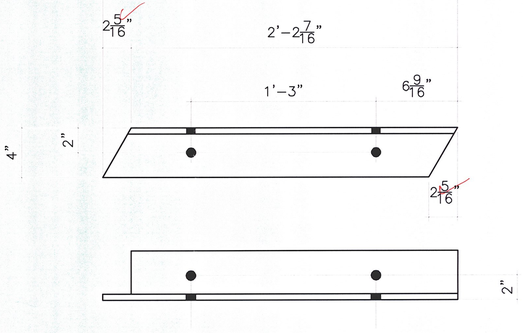

2-∠4X4X1/2, MARK "A5"

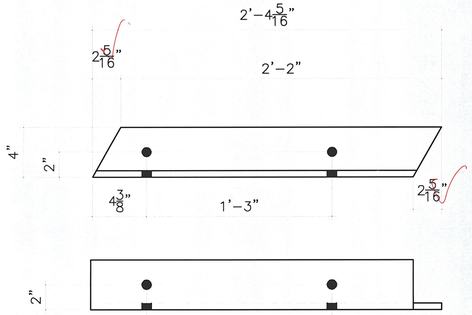

2-∠4X4X1/2, MARK "A7"

WORK THIS DWG. WITH DWG. 3

RECEIVED
CK'D BY VSS OK'D BY mem
JAN 20 2010
RESUBMIT ____ APPROVED AS NOTED
BY DATE 2/5/2010

ERECTION BOLTS W/H.H.N.				WASHERS		FINISH
QUAN.	SIZE	LENGTH	TYPE	FLAT	BEV.	GALV. AASHTO M232

FINISH	HOT DIPPED GALVANIZED
MATERIAL	AASHTO M270 GR. 36
HOLES	13/16"ø U.O.N.
ELECTRODES	PER W.P.S.
WELDS	AS NOTED
SURFACE PREP	SSPC-SP8

FOR APPROVAL ONLY

NO	DATE	DESCRIPTION	BY
REVISIONS			

ARC ENTERPRISES, INC.
ADVANCED RESOURCES & CONST. ENTERPRISES, INCORPORATED
P.O. BOX 120 KINGFIELD, ME. 04947
PHONE: (207) 265-2646 - FAX: (207) 265-4054

DRAFTER	JAC	EXPANSION JOINT DETAILS	PROJECT NO. BRS 0284(14)
DATE	1/8/10	VERMONT AGENCY OF TRANSPORTATION, TOWNS OF MORETOWN-MIDDLESEX, U.S. RTE. 2 MAJOR COLL.	DWG. NO. 4
CHECKED	MTD	G.C. WINTERSET, INC.	
JOB	#09-200		

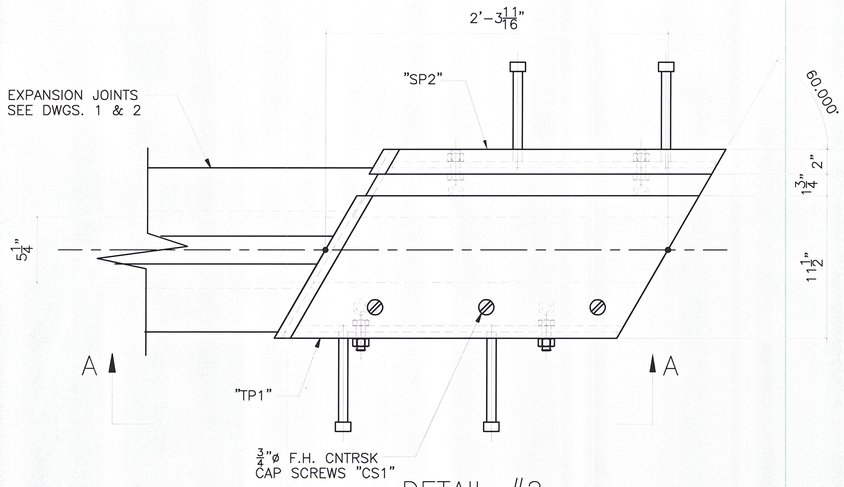

DETAIL #2

How is plate attached to SP2, weld?

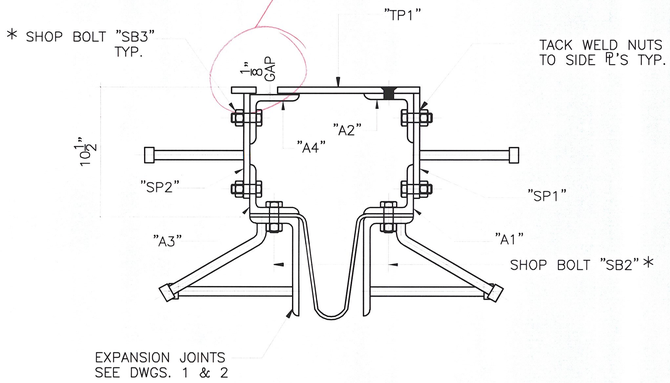

SECTION B–B

* SHOP NOTE:
MATCH DRILL HOLES AS REQ'D

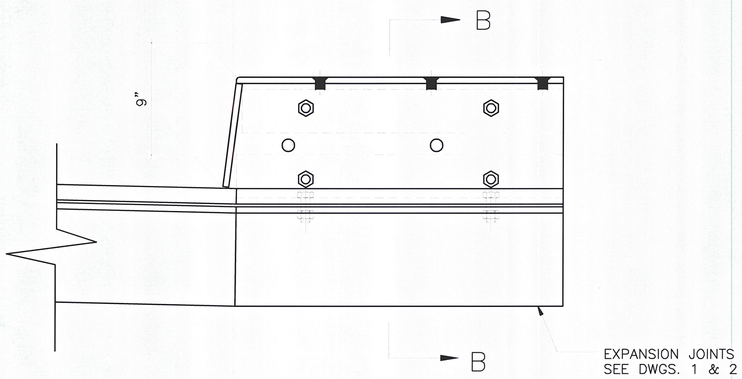

SECTION A–A

WORK THIS DWG. WITH DWG. 6

BILL OF MATERIAL

SHIP	SHIP MARK	NO. PCS.	PIECE MARK	DESCRIPTION	LENGTH	REMARKS	MAT'L
		2	TP1	TOP PL ASS'Y			
		2	tp1a	PL ½X11½	2'-9 1/16		
		2	tp1b	PL ½X8⅜	1'-1 7/8		
		2	SP1	SIDE PL ASS'Y			
		2	sp1a	PL ½X8½	2'-3 1/16		
		4	sJ	¾"ø CONC. STUD	0'-8		
		2	SP2	SIDE PL ASS'Y			
		2	sp2a	PL ½X2	2'-3 7/16		
		2	sp2b	PL ½X2 15/16	0'-8 9/16		
		2	sp2c	PL ½X8½	2'-3 1/16		
		4	sJ	¾"ø CONC. STUD	0'-8		
		2	A1	∠4X4X½	2'-4 3/4		
		2	A2	∠4X4X½	2'-4 5/16		
		2	A3	∠4X4X½	2'-4 5/16		
		2	A4	ANGLE ASS'Y			
		2	A4a	∠4X4X½	2'-3 11/16		
		2	A4pa	PL ½X5 5/16	0'-8¼		
		8	SB2	¾"ø BOLT	0'-2½	A325	
		16	SB3	¾"ø BOLT	0'-2¼	A325	
		6	CS1	¾"ø F.H. SCREW	0'-1¼	A325	

ERECTION BOLTS W/H.H.N.				WASHERS		FINISH
QUAN.	SIZE	LENGTH	TYPE	FLAT	BEV.	GALV. AASHTO M232

FINISH	HOT DIPPED GALVANIZED
MATERIAL	AASHTO M270 GR. 36
HOLES	13/16"ø U.O.N.
ELECTRODES	PER W.P.S.
WELDS	AS NOTED
SURFACE PREP	SSPC–SP8

FOR APPROVAL ONLY

NO	DATE	DESCRIPTION	BY

REVISIONS

RECEIVED
CK'T BY SSS OK'D BY MPM
JAN 20 2010
RESUBMIT ____ APPROVED As Noted
BY ____ DATE 2/5/2010

ARC ENTERPRISES, INC.
ADVANCED RESOURCES & CONST. ENTERPRISES, INCORPORATED
P.O. BOX 120 KINGFIELD, ME. 04947
PHONE: (207) 265–2646 – FAX: (207) 265–4054

DRAFTER	JAC
DATE	1/8/10
CHECKED	MTD
JOB	#09–200

EXPANSION JOINT DETAILS

VERMONT AGENCY OF TRANSPORTATION,
TOWNS OF MORETOWN–MIDDLESEX, U.S. RTE. 2 MAJOR COLL.

G.C. WINTERSET, INC.

PROJECT NO. BRS 0284(14)

DWG. NO. 5

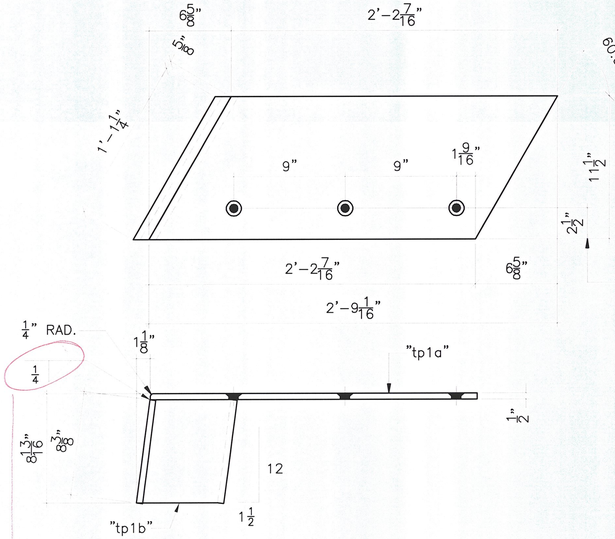

2—TOP PL ASS'Y, MARK "TP1"

DRILL & CNTRSK
FOR 3/4"ø F.H. SCREWS

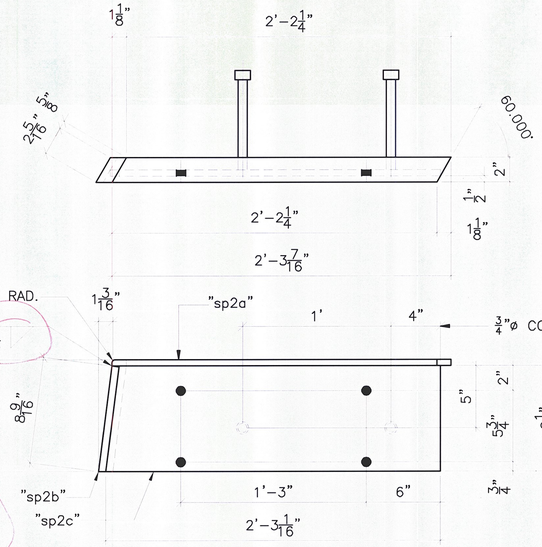

2—SIDE PL ASS'Y, MARK "SP2"

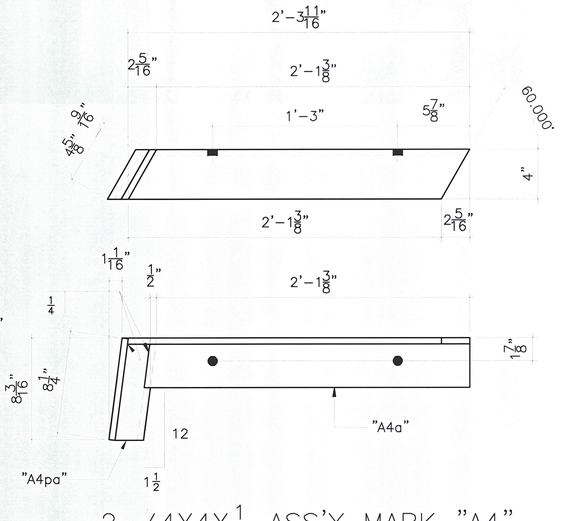

2—∠4X4X1/2 ASS'Y MARK "A4"

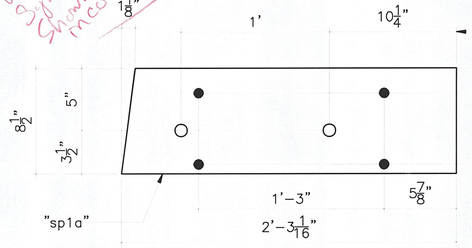

2—SIDE PL ASS'Y, MARK "SP1"

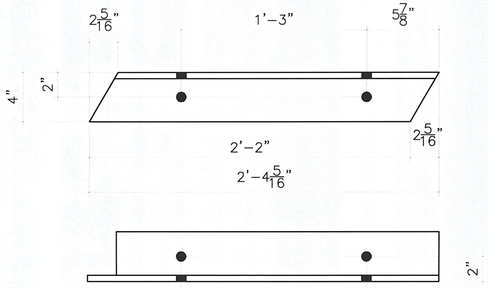

2—∠4X4X1/2, MARK "A3"

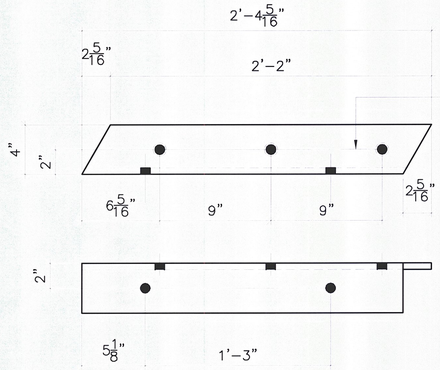

DRILL & TAP
FOR 3/4"ø F.H. SCREWS

2—∠4X4X1/2, MARK "A2"

2—∠4X4X1/2, MARK "A1"

WORK THIS DWG. WITH DWG. 5

RECEIVED
CK'D BY SSS CK'D BY MRM
JAN 26 2010
RESUBMIT APPROVED As Noted
BY DATE 2/5/2010

ERECTION BOLTS W/H.H.N.				WASHERS		FINISH
QUAN.	SIZE	LENGTH	TYPE	FLAT	BEV.	GALV. AASHTO M232

FINISH	HOT DIPPED GALVANIZED
MATERIAL	AASHTO M270 GR. 36
HOLES	13/16"ø U.O.N.
ELECTRODES	PER W.P.S.
WELDS	AS NOTED
SURFACE PREP	SSPC-SP8

FOR APPROVAL ONLY

NO	DATE	DESCRIPTION	BY

REVISIONS

ARC ENTERPRISES, INC
ADVANCED RESOURCES & CONST. ENTERPRISES, INCORPORATED
P.O. BOX 120 KINGFIELD, ME. 04947
PHONE: (207) 265-2646 – FAX: (207) 265-4054

DRAFTER	JAC
DATE	1/8/10
CHECKED	MTD
JOB	#09-200

EXPANSION JOINT DETAILS
VERMONT AGENCY OF TRANSPORTATION,
TOWNS OF MORETOWN-MIDDLESEX, U.S. RTE. 2 MAJOR COLL.
G.C. WINTERSET, INC.

PROJECT NO. BRS 0284(14)
DWG. NO. 6

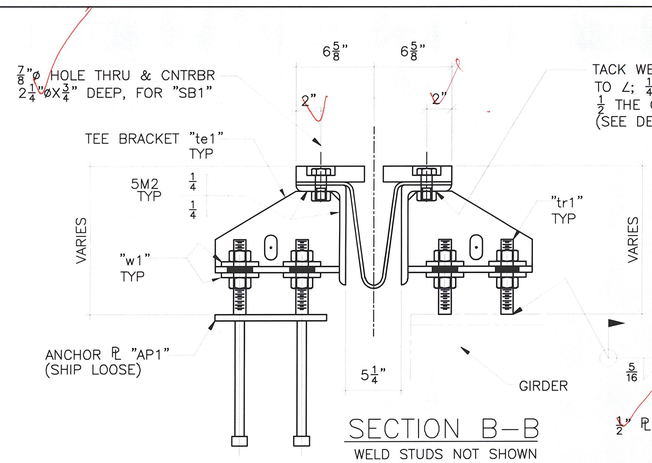

SECTION B–B

WELD STUDS NOT SHOWN

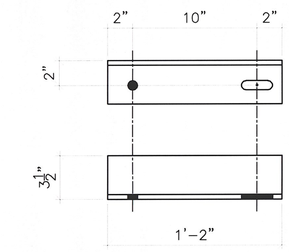

10–L3 1/2X3 1/2X3/8, "SA1"

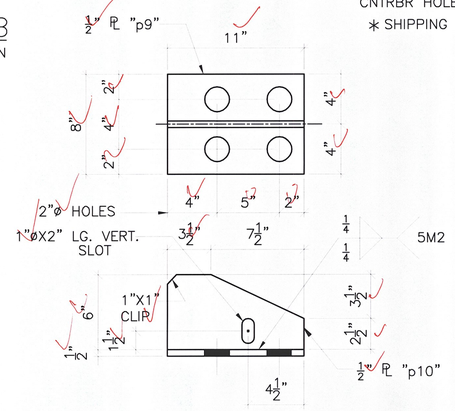

20–TEE BRACKET "te1"

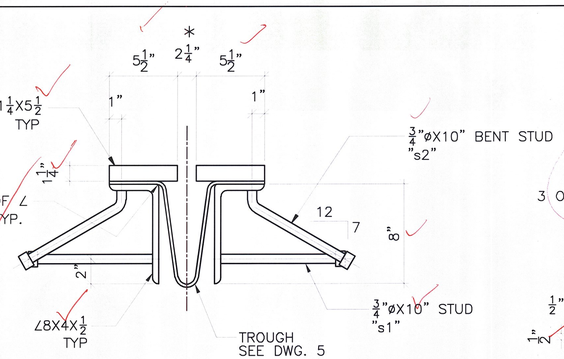

SECTION A–A

CNTRBR HOLES & BOLTS NOT SHOWN

∗ SHIPPING DIMENSION @ 45° F.

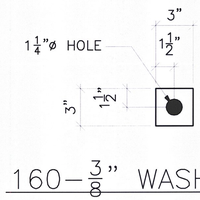

160–3/8" WASHER "w1"

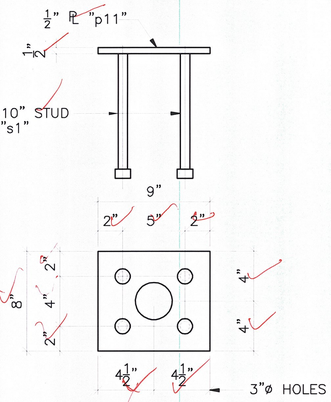

10–ANCHOR PL "AP1"

PLAIN MAT'L (NO GALV. REQ'D)

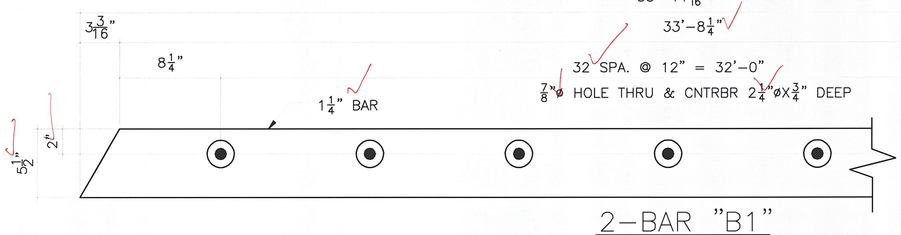

2–BAR "B1"

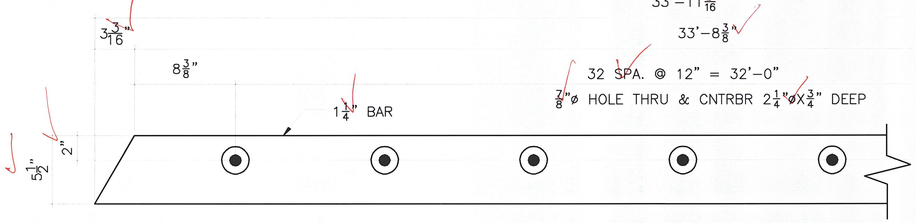

2–BAR "B2"

$\sqrt{(3\frac{3}{16})^2+(5\frac{1}{2})^2} = 6\frac{3}{8}$

$\sin^{-1}\left(\frac{3\frac{3}{16}}{6\frac{3}{8}}\right) = 30°$

RECEIVED
CK'T. BY SSS CK'D BY MEM
JAN 20 2010
RESUBMIT ____ APPROVED AS NOTED
BY ____ DATE 2/5/2010

Coat threads with never Seize grease

BILL OF MATERIAL

SHIP	SHIP MARK	NO. PCS.	PIECE MARK	DESCRIPTION	LENGTH	REMARKS	MAT'L
1	EJ1			EXPANSION JOINT			
		1	a1	∠8X4X1/2	38'-3 11/16		
		1	a2	∠8X4X1/2	38'-3 11/16		
		2	B1	PL 1 1/4X5 1/2	33'-11 9/16		
		38	s1	3/4"ø CONC. STUD	0'-10		
		38	s2	3/4"ø CONC. STUD	0'-10		
		66	SB1	3/4"ø BOLT	0'-2 1/4	A325	
		66	n1	3/4"ø NUT		A563	
		10	p9	PL 1/4X8	0'-11	ASS'Y te1	
		10	p10	PL 1/4X6	0'-11	ASS'Y te1	
		80	w1	PL 3/8X3	0'-3		
		40	tr1	1"ø ALL THREAD W/(2) NUTS EA.	0'-7	A307 A563	
1	EJ2			EXPANSION JOINT			
		1	a3	∠8X4X1/2	38'-3 13/16		
		1	a4	∠8X4X1/2	38'-3 13/16		
		2	B2	PL 1 1/4X5 1/2	33'-11 9/16		
		38	s1	3/4"ø CONC. STUD	0'-10		
		38	s2	3/4"ø CONC. STUD	0'-10		
		66	SB1	3/4"ø BOLT	0'-2 1/4	A325	
		66	n1	3/4"ø NUT		A563	
		10	p9	PL 1/4X8	0'-11	ASS'Y te1	
		10	p10	PL 1/4X6	0'-11	ASS'Y te1	
		80	w1	PL 3/8X3	0'-3		
		40	tr1	1"ø ALL THREAD W/(2) NUTS EA.	0'-7	A307 A563	
10	AP1			ANCHOR PLATE		PLAIN MAT'L	
		10	p11	PL 1/4X8	0'-9		
		40	s1	3/4"ø CONC. STUD	0'-10		
	NP1	2		5/32"X36" PREFORMED FABRIC 1/16"X3" BUTYL RUBBER TAPE	36'-4	3-PLY	
		2	db1	5/32"X4" PREFORMED FABRIC	0'-7"	3-PLY	
		4	SB3	1/2"ø GALV. BOLT	0'-1	W/N&(2)W	
				SHIPPING MATERIAL			
		10	SA1	∠3 1/2X3 1/2X3/8	1'-2		
		20	SB2	3/4"ø BOLT	0'-3 1/2	A325	

ERECTION BOLTS W/H.H.N.				WASHERS		FINISH
QUAN.	SIZE	LENGTH	TYPE	FLAT	BEV.	GALV. AASHTO M232

FINISH	HOT DIPPED GALVANIZED
MATERIAL	AASHTO M270 GR. 36
HOLES	AS NOTED
ELECTRODES	PER W.P.S.
WELDS	AS NOTED
SURFACE PREP	SSPC-SP8

FOR APPROVAL ONLY

NO	DATE	DESCRIPTION	BY

REVISIONS

ARC ENTERPRISES, INC.

ADVANCED RESOURCES & CONST. ENTERPRISES, INCORPORATED
P.O. BOX 120 KINGFIELD, ME. 04947
PHONE: (207) 265-2646 – FAX: (207) 265-4054

DRAFTER	JAC	EXPANSION JOINT DETAILS	PROJECT NO. BRS 0284(14)
DATE	1/8/10	VERMONT AGENCY OF TRANSPORTATION TOWNS OF MORETOWN–MIDDLESEX, U.S. RTE. 2 MAJOR. COLL.	DWG. NO. 7
CHECKED	MTD	G.C. WINTERSET, INC.	
JOB	#09-200		

VERMONT

State of Vermont
PDD/Structures Design Section
National Life Building -- Drawer 33
Montpelier, VT 05633-5001
www.aot.state.vt.us

[phone] 802-828-2621
[fax] 802-828-3566
[ttd] 800-253-0191

Agency of Transportation

ARC Enterprises, Inc.
P. O. Box 120
Kingfield, ME 04947

DATE: February 5, 2010

Project Name: Moretown-Middlesex **Project #: BRF 0284 (14)**

Structure Identification: US 2, Bridge 50 over the Winooski River

The following Expansion Joint [Item #516.11, Expansion Joint, Vermont] for the above project (Vendor's Job #09-200) transmitted with letter dated Jan. 13, 2010 have been reviewed and are being returned herewith.

Sheets: DWG 8 and welding procedures
are approved [X]

Sheets: DWGs 1 through 7
are [X]approved "as noted"

You must provide notice to our fabrication inspector, Jeff Clark, as to the date fabrication represented by these drawings will begin. That notice must be received and acknowledged at least seven days prior to that date, as per Specification 506.03. Jeff may be contacted by phone at (802)828-0044 or email at jeff.clark@state.vt.us. Any material fabricated prior to the notification date is subject to rejection without further cause.

Sincerely,

Martha Evans-Mongeon
Project Manager

Attachments
cc: [X] Resident Engineer w/prints, Bob Suckert
[X] Shop Inspector w/prints, Jeff Clark
[X] Contractor w/prints, Winterset
[ ] Subcontractor – letter only
[X] Construction Division – letter only
[X] Materials & Research Section (C&IA Unit) – letter only
[X] Files Structures

VTrans Working to Get You There
Vermont Agency of Transportation

STATE OF MAINE
DEPARTMENT OF TRANSPORTATION
☑ Approved ☐ Returned for Corrections
JAN 3, 2006
☐ Approved as noted
William Doukas, P.E.

VTRANS RECEIVED
OK'D BY ____ OK'D BY JOC
JAN 2 0 2010
RESUBMIT ____ APPROVED ✓
DATE 01/29/10

WELDING PROCEDURE SPECIFICATION (WPS) YES (X) Rejected
PROCEDURE QUALIFIED BY ___X___ QUALIFIED BY TESTING ____
OR PROCEDURE QUALIFICATION RECORD (PQR) YES ( )

Company Name ARC ENTERPRISES, INC.
Welding Process(es) GMAW
Supporting PQR No.(s) ____

Identification # ARC WPS 5M2
Revision 2 Date 12/5/2005 By SVH
Authorized By Steve Howard Date 12/5/2005
Type - Manual ( ) Semi-Automatic (X)
Machine ( ) Automatic ( )

JOINT DESIGN USED
Type FILLET
Single (X) Double Weld ( )
Backing YES ( ) NO (X)
Backing Material N/A
Root Opening 0 Root Face Dimension N/A
Groove Angle N/A Radius (J-U) N/A
Back Gouging YES ( ) NO (X) Method N/A

BASE METALS
Material Spec A709
Type or Grade 36 50
Thickness Groove N/A Fillet UNLIMITED
Diameter (Pipe) N/A

FILLER METALS
AWS Specification A5.18
AWS Classification ER70S-7 ESAB 87 HP

SHIELDING 98%AR 2%O
Flux ____ Gas 98-2
Composition ____
Electrode - Flux (Class) Flow Rate 25 - 40
n/a Gas Cup Size 5/8

T ≤ 3/4 50° 3/4 - 1-1/2 = 70° 1-1/2 - 2-1/2 = 150° OVER 2-1/2 = 225°

POSITION
Position of Groove ____ Fillet 1F 2F
Vertical Progression ( ) UP ( ) DOWN

ELECTRICAL CHARACTERISTICS
Transfer Mode (FCAW) Short Circuiting ( )
Globular ( ) Spray (X)
Current: AC ( ) DCEP (X) DCEN ( )
Pulsed ( )
OTHER: ____

TECHNIQUE
Stringer or Weave Bead STRINGER
Multi-pass or Single Pass (per side) SINGLE / Multi
Number of Electrodes 1
Electrode Spacing Longitudinal N/A
Lateral N/A
Angle N/A
Contact Tube to Work Distance 5/8 - 3/4
Pooling N/A
Interpass Cleaning: ____

RECEIVED

POSTWELD HEAT TREATMENT OK'D BY ____
Temp N/A
Time N/A JAN 2 0 2010

RESUBMIT ____ APPROVED ____

WELDING PROCEDURE

Pass or Weld Layer(s)	Size S	Filler Metals Class	Filler Metals Diameter	Current Type & Polarity	Current Amps or Wire Feed Speed	Volts	Travel Speed	BY
1F 1F	3/16	ER70S-7	0.035	DCEP	180 - 220	25 - 27	7 - 8	
1 1	1/4	ER70S-7	0.035	DCEP	180 - 220	25 - 27	5 - 6	
1 1	5/16	ER70S-7	0.035	DCEP	180 - 220	25 - 27	4 - 5	
1 1	3/8	ER70S-7	0.035	DCEP	180 - 220	25 - 27	3 - 4	
1 2F	7/16	ER70S-7	0.035	DCEP	180 - 220	25 - 27	+ 2 - 3	
1 2F	1/2	ER70S-7	0.045	DCEP	270 - 330	28 - 30	+ 2 - 3 + (4-6)	

Joint Details

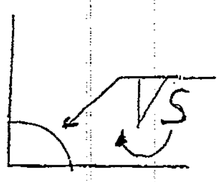

+ Sec 4.14.3 AWS D1.5

For Steve:-

RECEIVED
CK'D BY _____ OK'D BY JLC
JAN 2 [illegible] 2010
RESUBMIT _____ APPROVED ✓
BY _____ DATE 01/29/10

WELDING PROCEDURE SPECIFICATION (WPS) YES (X)
PREQUALIFIED _X_ QUALIFIED BY TESTING _____
or PROCEDURE QUALIFICATION RECORD (PQR) YES ( )

Identification # ARC WPS 19
Revision _____ Date _____ By _____
Authorized by STEVE HOWARD Date 3/22/06
Type - Manual Semi - Automatic (X)
Machine ( ) Automatic ( )

Company Name ARC ENTERPRISES, INC.
Welding Process(es) GMAW
Supporting PQR No.(s) _____

JOINT DESIGN USED
Type B-U3-GF
Single Double Weld (X)
Backing YES ( ) NO (X)
Backing Material _____
Root Opening 0-1/8 Root Face Dimension 0-1/8
Groove Angle 60 (+10, -5) Radius (J-U) _____
Back Gouging YES (X) NO ( ) Method _____

BASE METALS
Material Spec A709 A572
Type or Grade 50
Thickness Groove U Fillet _____
Diameter (Pipe) _____

FILLER METALS
AWS Specification A5.18
AWS Classification ER70S-7 ESAB 87 HP

SHIELDING
Flux _____ Gas 98%Argon 2% O
Composition _____
Electrode - Flux (Class) _____ Flow Rate 25-40 CFH
Gas Cup Size 5/8

POSITION
Position of Groove 1G Fillet _____
Vertical Progression UP ( ) DOWN

ELECTRICAL CHARACTERISTICS
Transfer Mode (FCAW) Short Circuiting ( )
Globular ( ) Spray (X)
Current : AC ( ) DCEP (X) DCEN ( )
Pulsed ( )
OTHER : _____

TECHNIQUE
Stringer or Weave Bead Stringer
Multi-pass or Single Pass (per side) Multi
Number of Electrodes 1
Electrode Spacing Longitudinal _____
Lateral _____
Angle _____

Contact Tube to Work Distance 3/8-3/4
Peening _____
Interpass Cleaning : _____

RECEIVED
CK'D BY _____ OK'D BY _____
JAN 2 0 2010
RESUBMIT _____ APPROVED _____
BY _____ DATE _____

POSTWELD HEAT TREATMENT
Temp _____
Time _____

Non-Structural Applications

WELDING PROCEDURE

Pass or Weld Layer(s)	WELD size	Filler Metals Class	Filler Metals Diameter	Current Type & Polarity	Current Amps or Wire Feed Speed	Volts	Travel Speed
4	1/2"	ER70S-7	0.035	DCEP	180-220	25-27	7-11 ipm

Joint Details

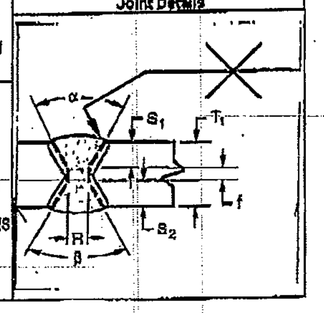

STATE OF MAINE
DEPARTMENT OF TRANSPORTATION
☐ REVIEWED ☒ REVIEWED WITH COMMENTS
☐ REJECTED ☐ RETURNED FOR CORRECTIONS
MAR 03 2008

ATTn. Bill Doukas

THIS DOCUMENT WAS REVIEWED IN ACCORDANCE WITH STATE OF MAINE SPECIFICATIONS SECTION 105.7 WORKING DRAWINGS
William B. Doukas, P.E.

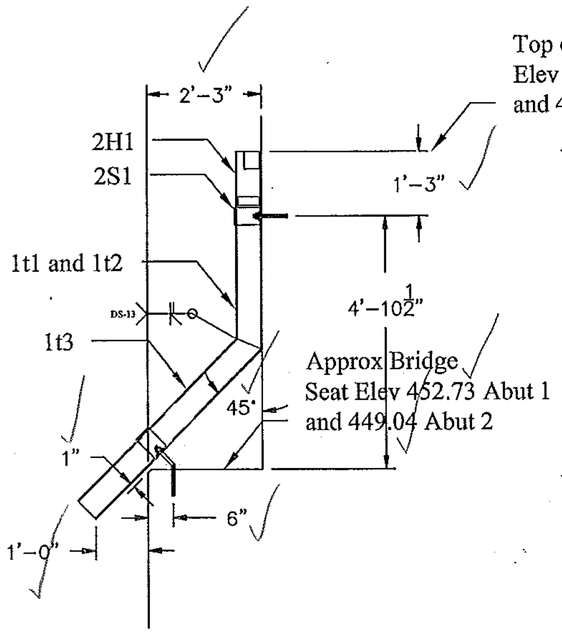

SIDE VIEW OF
HOPPER LAYOUT

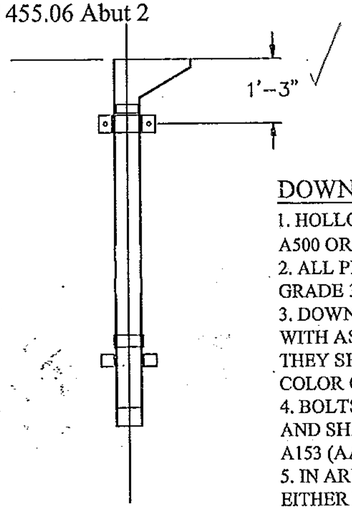

TOP VIEW OF
HOPPER LAYOUT

DOWNSPOUT NOTES:

1. HOLLOW STRUCTURAL TUBING SHALL CONFORM TO ASTM A500 OR A501.
2. ALL PLATES, BARS, AND ANGLES SHALL BE AASHTO M270 GRADE 36.
3. DOWNSPOUTS SHALL BE GALVANIZED IN ACCORDANCE WITH ASTM A123 AFTER FABRICATION. AFTER GALVANIZING THEY SHALL BE PAINTED. THE PAINT SHALL BE BROWN COLOR CHIP #20059.
4. BOLTS, NUTS & WASHERS SHALL CONFORM TO ASTM A307 AND SHALL BE GALVANIZED IN ACCORDANCE WITH ASTM A153 (AASHTO M232).
5. IN AREAS WHERE THE GALVANIZING HAS BEEN REMOVED EITHER BY CUTTING, BURNING, WELDING, PLACING, OR ANY OTHER MEANS, IT SHALL BE REPAIRED BY THOROUGHLY CLEANING THE DAMAGED AREAS WITH A WIRE BRUSH AND PAINTING THE DAMAGED AREAA WITH TWO COATS OF AN APPROVED SEALANT.

RECEIVED
CK'D BY SSS OK'D BY
NOV 24 2009
RESUBMIT APPROVED
BY DATE

OWN Copy

6. SEAL WELD ALL CONNECTIONS IF POSSIBLE;
7. PRIOR TO GALVANIZING, ALL EDGES OF PLATES, SHAPES, ETC. SHALL BE GROUND TO A 1/16 INCH RADIUS.

BILL OF MATERIALS

QTY	MARK	SHAPE	LENGTH	REMARKS
1	1D1	DOWNSPOUT ASSEMBLY		
1	2H1	Hopper Assy		
1	2S1	Strap Assy		
1	2S2	Strap Assy		
1	1t1	Tube 6" x 6" x 1/4"	3'-0 7/8"	
1	1t3	Tube 6" x 6" x 1/4"	4'-7 1/8"	
1	1D2	DOWNSPOUT ASSEMBLY		
1	2H1	Hopper Assy		
1	2S1	Strap Assy		
1	2S2	Strap Assy		
1	1t2	Tube 6" x 6" x 1/4"	2'-11 5/8"	
1	1t3	Tube 6" x 6" x 1/4"	4'-7 1/8"	

WT = 289.66
TOT 793.13

(1) - 1D1 DOWNSPOUT (Abut 1)
(1) - 1D2 DOWNSPOUT (Abut 2)

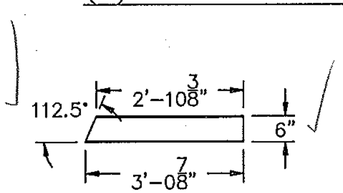

(1) - DETAIL of 1t1

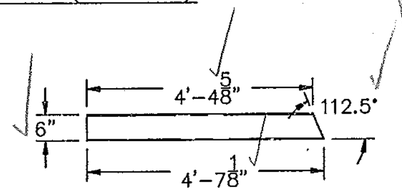

(2) - DETAIL of 1t3

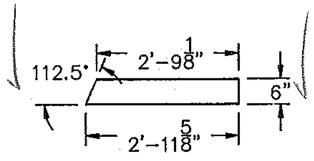

(1) - DETAIL of 1t2

		DATE SUBMITTED
0	10-2-2009	SUBMITTED FOR APPROVAL
REV NO.	DATE	DESCRIPTION
HOLES AS NOTED		
MATERIAL: AASHTO M 270 GRADE 36 GALV		

DRAWING COVERS
ABUTMENT DOWNSPOUT LAYOUT

PROJECT	MORETOWN–MIDDLESEX BRS 0284 (14)
LOCATION	US ROUTE 2 OVER WINOOSKI RIVER
ENGINEER	VERMONT AGENCY OF TRANSPORTATION
CUSTOMER	WATERSET, INC.

MERRIMACK SHEET METAL
119 HALL STREET
CONCORD NH 03301
Tel. 603.224.7766
Fax 603.224.7925

DRAWN BY: RL
CHECKED BY: JD
JOB NO: #2912
DWG: F1

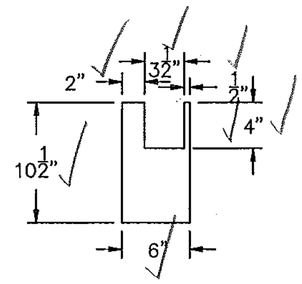

(2) - 2p3 DETAIL

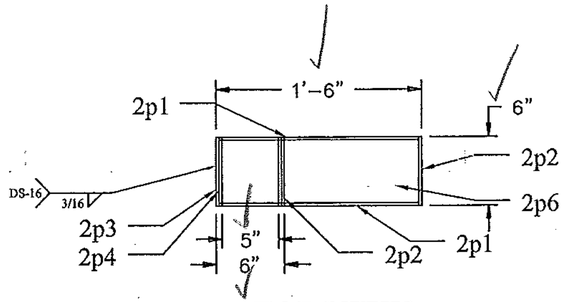

TOP VIEW

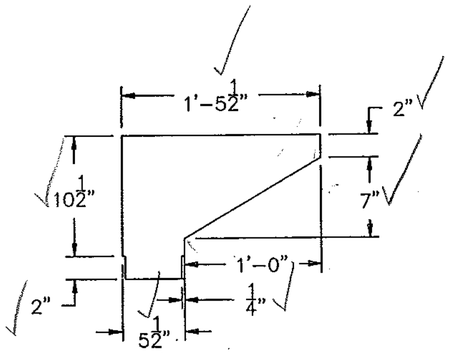

(4) - DETAIL 2p1

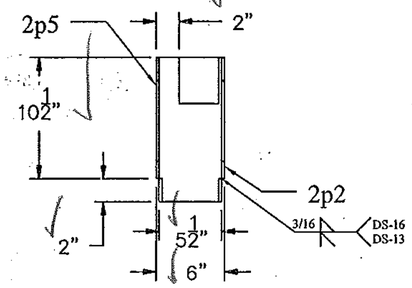

SIDE VIEW

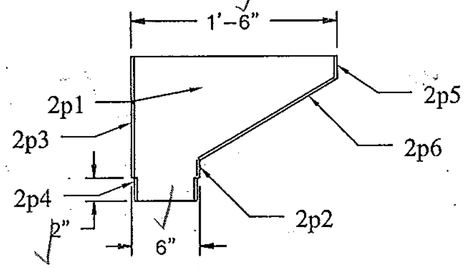

FRONT VIEW

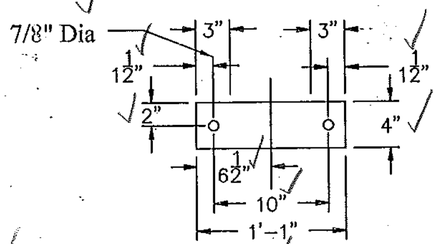

(2) - 2b2 DETAIL

HOPPER DETAIL

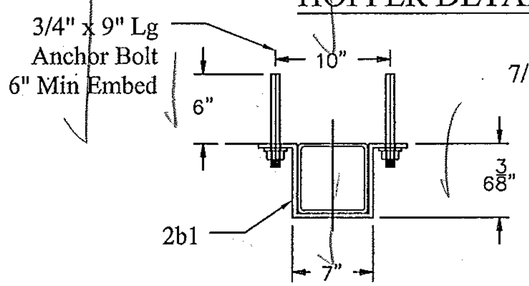

(2) 2S1 - STRAP ASSY

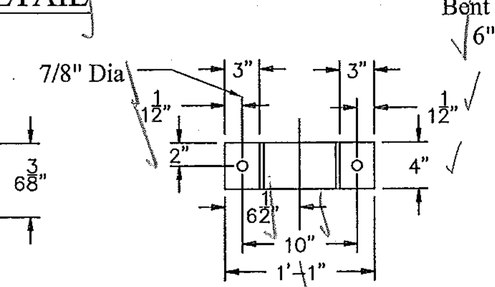

(2) - 2b1 DETAIL

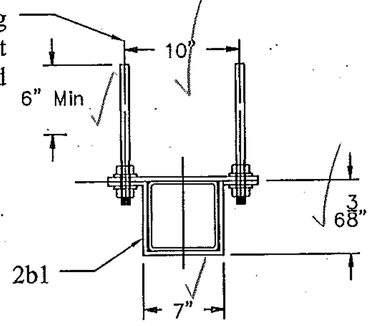

(2) 2S2 - STRAP ASSY

BILL OF MATERIALS

QTY	MARK	SHAPE	LENGTH	REMARKS
2	2H1	HOPPER ASSY		
4	2p1	Plate 1/4" x 12 1/2"	1'-5 1/2"	
2	2p2	Plate 1/4" x 6"	0'-1 1/2"	
2	2p3	Plate 1/4" x 6"	0'-10 1/2"	
4	2p4	Plate 1/4" x 6"	0'-2"	
2	2p5	Plate 1/4" x 6"	0'-2"	WT 24.05 30.82
2	2p6	Plate 1/4" x 6"	1'-1 5/8"	
2	2S1	STRAP ASSY		
2	2b1	Bar 3/8" x 4"	2'-1"	20.27
4		3/4" x 9" Lg Richmond Anchor Bolts w/ Nut & Washer		
2	2S2	STRAP ASSY		
2	2b1	Bar 3/8" x 4"	2'-1"	32.33
2	2b2	Bar 3/8" x 4"	1'-1"	
4		3/4" x 12" Lg Richmond Bent Anchor Bolts w/ 2 Nuts & Washers		139.42

RECEIVED
CK'D BY SSS OK'D BY
NOV 24 2009
RESUBMIT APPROVED
BY DATE

		DATE SUBMITTED
0	10-3-2009	SUBMITTED FOR APPROVAL
REV NO.	DATE	DESCRIPTION

HOLES AS NOTED
MATERIAL: AASHTO M 270 GRADE 36 GALV

DRAWING COVERS
DOWNSPOUT DETAILS

PROJECT	MORETOWN-MIDDLESEX BRS 0284 (14)
LOCATION	US ROUTE 2 OVER WINOOSKI RIVER
ENGINEER	VERMONT AGENCY OF TRANSPORTATION
CUSTOMER	WINTERSET, INC.

MERRIMACK SHEET METAL

119 HALL STREET
CONCORD NH 03301

Tel. 603.224.7766
Fax 603.224.7925

DRAWN BY: RL
CHECKED BY: JD
JOB NO: #2912
DWG: F2

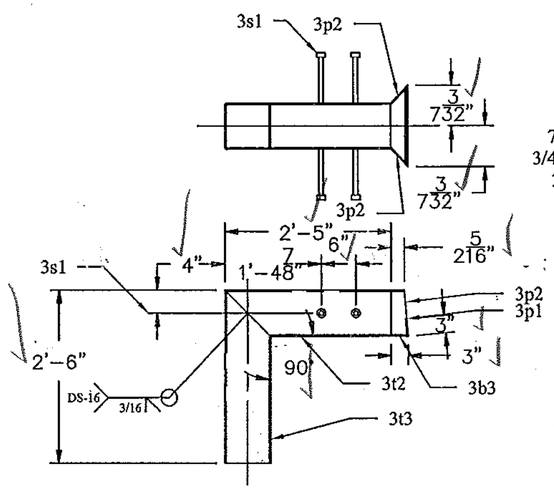

(1) - DETAIL of 3T2

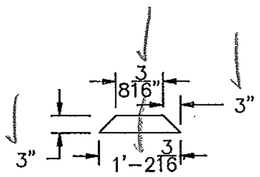

(1) - DETAIL of 3b3

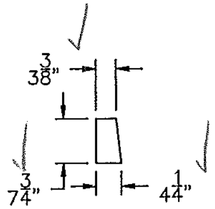

(2) - DETAIL of 3p2

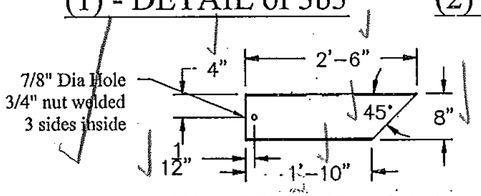

(1) - DETAIL of 3t3

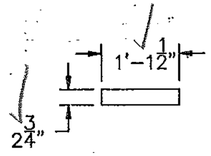

(1) - DETAIL of 3p1

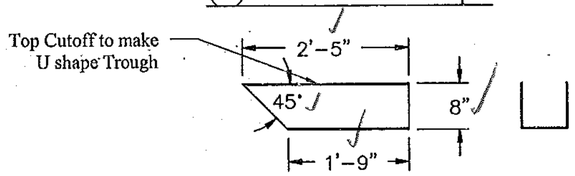

(1) - DETAIL of 3t2

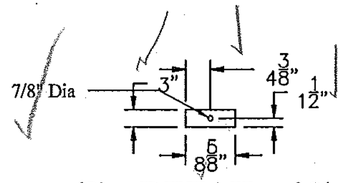

(2) - DETAIL of 3b1

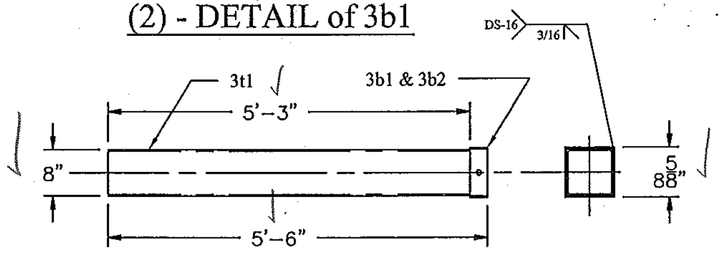

(1) - DETAIL of 3T1

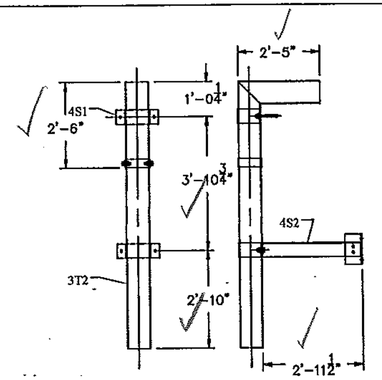

FRONT VIEW OF HOPPER LAYOUT

SIDE VIEW OF HOPPER LAYOUT

(1) - 3D1 DOWNSPOUT (Midspan)

BILL OF MATERIALS

QTY	MARK	SHAPE	LENGTH	REMARKS
1	3D1	DOWNSPOUT (MIDSPAN) ASSEMBLY		
1	3T1	Lower Tube		
1	3T2	Upper Tube		
1	4S1	Strap Assy		
1	4S2	Support Assy		
2		3/4" Bolt x 2" Lg and Washer		
1	3T1	LOWER TUBE		
2	3b1	Bar 1/4" x 3"	0'-8 5/8"	17.29
2	3b2	Bar 1/4" x 3"	0'-8 1/8"	
1	3t1	Tube 8" x 8" x 1/4"	5'-3"	
1	3T2	UPPER TUBE		
1	3b3	Bar 1/4" x 3"	1'-2 3/16"	
1	3p1	Plate 1/4" x 2 3/4"	1'-1 1/2"	14.156
2	3p2	Plate 1/4" x 4 1/4"	0'-7 3/4"	
1	3t2	Tube 8" x 8" x 1/4"	2'-5"	
1	3t3	Tube 8" x 8" x 1/4"	2'-6"	
4	3s1	3/4" x 8" Lg Welded Studs		234.45
2		3/4" Nuts		

RECEIVED
OK'D BY SSS OK'D BY
NOV 24 2009
RESUBMIT APPROVED
BY DATE

		DATE SUBMITTED
0	10–3–2009	SUBMITTED FOR APPROVAL
REV NO.	DATE	DESCRIPTION

HOLES AS NOTED

MATERIAL: AASHTO M 270 GRADE 36 GALV

DRAWING COVERS
MIDSPAN DOWNSPOUT LAYOUT

PROJECT	MORETOWN–MIDDLESEX BRS 0234 (14)
LOCATION	US ROUTE 2 OVE WINOOSKI RIVER
ENGINEER	VERMONT AGENCY OF TRANSPORTATION
CUSTOMER	WINTERSET, INC.

MERRIMACK SHEET METAL

119 HALL STREET
CONCORD NH 03301

Tel. 603.224.7766
Fax 603.224.7925

DRAWN BY: RL
CHECKED BY: JD
JOB NO: #2912
DWG: F3

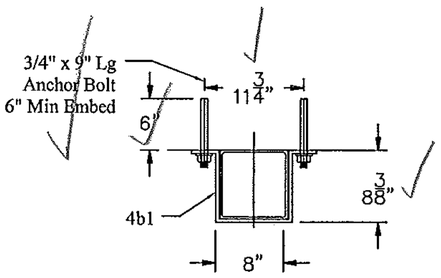

(1) 4S1 - STRAP ASSY

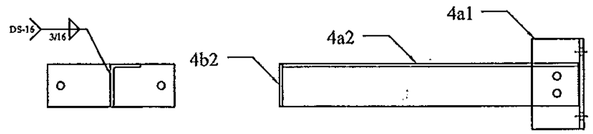

(1) 4S2 - SUPPORT ASSY

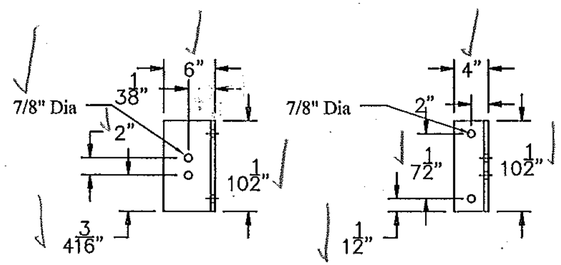

(1) - 4a1 DETAIL

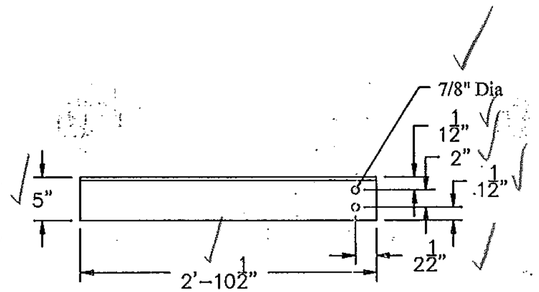

(1) - 4a2 DETAIL

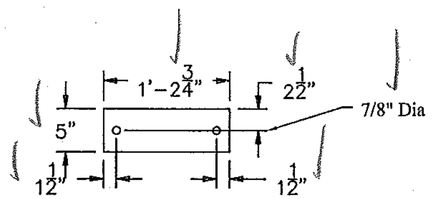

(1) - 4b2 DETAIL

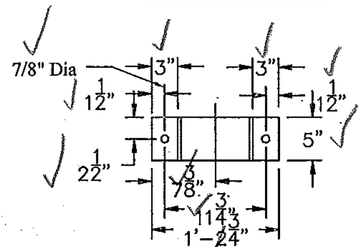

(2) - 4b1 DETAIL

BILL OF MATERIALS

QTY	MARK	SHAPE	LENGTH	REMARKS
1	4S1	STRAP ASSY		
1	4b1	Bar 3/8" x 5"	2'-6 3/4"	
2		3/4" x 9" Lg Richmond Anchor Bolts w/ Nut & Washer		
1	4S2	SUPPORT ASSY		
1	4a1	Angle 6" x 4" x 1/2"	0'-10 1/2"	
1	4a2	Angle 5" x 3 1/2" x 3/8"	2'-10 1/2"	
1	4b1	Bar 3/8" x 5"	2'-6 3/4"	
1	4b2	Bar 3/8" x 5"	1'-2 3/4"	
6		3/4" x 2" Lg Bolt w/ Nut & Washer		

RECEIVED
CK'D by SSS OK'D BY
NOV 24 2009
RESUBMIT APPROVED
BY DATE

		DATE SUBMITTED
0	10-3-2009	SUBMITTED FOR APPROVAL
REV NO.	DATE	DESCRIPTION

HOLES AS NOTED

MATERIAL: AASHTO M 270 GRADE 36 GALV

DRAWING COVERS
MIDSPAN DOWNSPOUT DETAILS

PROJECT	MORETOWN-MIDDLESEX BRS 0284 (14)
LOCATION	US ROUTE 2 OVER WINOOSKI RIVER
ENGINEER	VERMONT AGENCY OF TRANSPORTATION
CUSTOMER	WATERSET, INC.

MERRIMACK SHEET METAL

119 HALL STREET
CONCORD NH 03301

Tel. 603.224.7766
Fax 603.224.7925

DRAWN BY: RL
CHECKED BY: JD
JOB NO: #2912
DWG: F4

VERMONT

State of Vermont
PDD/Structures Design Section
National Life Building – Drawer 33
Montpelier, VT 05633-5001
www.aot.state.vt.us

[phone] 802-828-2621
[fax] 802-828-3566
[ttd] 800-253-0191

Agency of Transportation

See next sheet for instructions

D. S. Brown
300 East Cheery Street
North Baltimore, Ohio 45872

DATE: November 4, 2009

Project Name: Moretown-Middlesex **Project #: BRS 0284 (14)**

Structure Identification: US route 2 Bridge #50 over the Winooski River

The following Bearing details [Item #531.11, Name (Bearing Device Assembly, Elastomeric Pad)] for the above project (Vendor's Job #27445)transmitted with your letter dated October 6, 2009 have been reviewed and are being returned herewith.

Sheets: 01, 02, and GN1, and welding procedures
are approved [X]

Sheets: _____
Are to be reconsidered (note comments in red) and resubmitted for final approval.

You must provide notice to our fabrication inspector, Jeff Clark, as to the date fabrication represented by these drawings will begin. That notice must be received and acknowledged at least seven days prior to that date, as per Specification 506.03. Jeff may be contacted by phone at (802)828-0044 or email at jeff.clark@state.vt.us. Any material fabricated prior to the notification date is subject to rejection without further cause.

Sincerely,

Martha Evans-Mongeon
Project Manager

Attachments
cc: [X] Resident Engineer w/prints, Bob Suckert
[X] Shop Inspector w/prints, Jeff Clark
[X] Contractor w/prints, Winterset, Inc
[ ] Subcontractor – letter only _____
[X] Construction Division – letter only
[X] Materials & Research Section (C&IA Unit) – letter only
[X] Files (Structures)

VTrans Working to Get You There Vermont Agency of Transportation

DS Brown Company
300 East Cherry Street
North Baltimore, OH 45872
(419) 257-3561
(419) 257-0332 [Engineering Fax #]

Date: October 6, 2009

Winterset, Inc.
Alex Thompson
128 Winterset Drive
Lyndonville, VT 05851
Telephone #: (802) 626-9330

Project #	27445-1104
Description:	US Route 2
Project #:	BRS 0284(14)
County, State:	Washington County, VT

The following documents are being submitted for:

- ☒ ***Approval***
- ☐ Distribution
- ☐ Per your Request
- ☐ Information

# of Copies	Drawing #	Document Size	Description
1	GN1, 1 & 2	11" x 17"	"Elastomeric Bearing" Shop Drawings
1	2	8 ½" x 11"	Welding Procedures [A-(MC)GF-01 & B-FF-01]

Please forward the enclosed documents to the appropriate party for review. Return the reviewed documents to DS Brown as soon as possible. Note that once drawings are returned, 10-12 weeks will be required for product fabrication. Your assistance in expediting the approval process would be appreciated.

Remarks:
If you have any comments or concerns, please contact LuAnn Hayfield, Engineering Administrator @ (419) 257-3561 or lhayfield@dsbrown.com.

RECEIVED
OK'D BY _____ OK'D BY _____
OCT 09 2009
RESUBMIT _____ APPROVED _____
BY DATE

Copies to: Folder
Drawings to: Folder, da, dt, QC
File Name: 27445-1104 Transmittal Letter
Signed By: Dan Evans/lah

Production Joint Welding Procedure Specification (D1.5-02)

Procedure No: A-(MC)GF-01 Date Issued: 9-28-04 Revision No: 1 Rev. Date: 2-5-09

Contractor (Fabricator) D. S. Brown Company Prepared by: James R. Connor, Quality Assurance Manager

1. Non-Fracture Critical [X] Fracture Critical [ ] WPS Expiration Date: 9-28-09
2. Qualified in accordance with: AWS D1.5- 2002 (5.12.1)
   Referenced PQR No(s). PQR-(MC)GMAW-01(04) __ , __ , ____
   Referenced FWST No(s). PQR-(MC)GMAW-FWST-01A(04) , PQR-(MC)GMAW-FWST-01B(04) , __ , __
3. Material specification(s) ASTM A709 Gr. 36, 50, 50W
4. Material Thickness (es) Unlimited
5. Welding process GMAW
6. Manual [ ] , machine [X] , or semiautomatic [X]
7. Position(s) of welding 1F, 2F
8. Filler metal specification AWS A5.18
9. Filler metal class and brand name E70C-6M Corex Metal-Core Maxim
10. Flux class & brand N/A , Type N/A
11. Shielding gas 75% Ar / 25% CO2 Flow rate 45 CFH
12. Single pass [X] Or multiple pass [X]
13. Single arc [X] Or multiple arc [ ]
14. Welding Current DCEP
15. Polarity Reverse
16. Welding progression stringers
17. Root treatment Clean to bright sound metal or per AWS D1.5 (3.2.1 & 3.11)
18. Postheat treatment N/A
19. Calculated Heat Input (KJ/In) Min 30.6 Kj/in Max 51.1 Kj/in
20. Electrode extension (electrical stickout) 3/4"

For DOT Approval

VTRANS RECEIVED OCT 09 2009

CK'D BY ____ OK'D BY JWC

REQUEST ____ APPROVED ____

BY ____ DATE 10/29/09

Weld size (In)	Pass No(s).	Electrode Size (In)	Welding Process Variables AMPS/WFS*	VOLTS	Travel Speed (IPM)
**1/4"	1	.052"	265-320	31-34.5	13-16
5/16"	1	.052"	265-320	31-34.5	13-16
3/8"	1-3	.052"	265-320	31-34.5	13-16
7/16"	2-4	.052"	265-320	31-34.5	13-16
1/2"	4-6	.052"	265-320	31-34.5	13-16
5/8"	5-7	.052"	265-320	31-34.5	13-16
3/4"	6-8	.052"	265-320	31-34.5	13-16

Joint Detail (Fillet)
Show all dimensions, weld sizes, passes, and AWS symbols

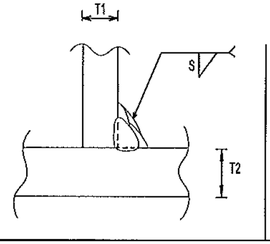

T1 = Varies
T2 = Varies
S = Weld Size

**** T1 & T2 equal to or less than 3/4" for 1/4" welds.**

* Wire feed speed may be used along with amperage (include chart)

Prepared By: Jas R Connor DSB QA Manager

Project: ____

DSB Job: 27445-1104

Preheat and Interpass Temperature Chart

Base Metal Thickness range	Minimum Preheat (°F)	Max Preheat & Interpass (°F)
= 3/4"	50°F	450 ° F
>3/4" to =1.5"	70°F	450 ° F
>1.5" to =2.5"	150°F	450 ° F
>2.5"	225°F	450 ° F

Note: When this procedure is used for A709Gr50W materials, it shall be limited to 5/16" single pass or material be coated.

Production Joint Welding Procedure Specification (D1.5-02)

Procedure No: B-FF-01 Date Issued: 3-28-08 Revision No: 0 Rev. Date: ____

Contractor (Fabricator) D. S. Brown Company Prepared by: Brad Streeter, Quality Assurance Manager

1. Non-Fracture Critical [X] Fracture Critical [ ] WPS Expiration Date: 3-6-13
2. Qualified in accordance with: AWS D1.5- 2002 (5.13)
   Referenced PQR No(s). PQR-FCAW-01-(08) __ , __ , ____
   Referenced FWST No(s). N/A , N/A , __ , ____
3. Material specification(s) ASTM A709 Gr. 36, 50, 50W
4. Material Thickness (es) Unlimited
5. Welding process FCAW
6. Manual [ ] , machine [ ] , or semiautomatic [X]
7. Position(s) of welding 1F, 2F
8. Filler metal specification AWS A5.20
9. Filler metal class and brand name E71T-1CH8 (UltraCore71C)
10. Flux class & brand N/A , Type N/A
11. Shielding gas 100% CO2 Flow rate 45 CFH
12. Single pass [X] Or multiple pass [X]
13. Single arc [X] Or multiple arc [ ]
14. Welding Current DCEP
15. Polarity Reverse
16. Welding progression stringers
17. Root treatment Clean to bright sound metal or per AWS D1.5 (3.2.1 & 3.11)
18. Postheat treatment N/A
19. Calculated Heat Input (KJ/In) Min 32.2 Kj/in Max 45.8 Kj/in
20. Electrode extension (electrical stickout) 3/4"

For DOT Approval

VTRANS RECEIVED OK'D BY ____ OK'D BY JWC
OCT 09 2009
BROUGHT ____ APPROVED ✓
BY ____ DATE 10/29/09

Weld size (In)	Pass No(s).	Electrode Size (In)	Welding Process Variables AMPS/WFS*	VOLTS	Travel Speed (IPM)
**1/4"	1	1/16"	257-295	26.1-29.5	11.4-12.5
5/16"	1	1/16"	257-295	26.1-29.5	11.4-12.5
3/8"	2-3	1/16"	257-295	26.1-29.5	11.4-12.5
7/16"	3-5	1/16"	257-295	26.1-29.5	11.4-12.5
1/2"	4-6	1/16"	257-295	26.1-29.5	11.4-12.5
5/8"	5-7	1/16"	257-295	26.1-29.5	11.4-12.5
3/4"	6-8	1/16"	257-295	26.1-29.5	11.4-12.5

Joint Detail (Fillet)
Show all dimensions, weld sizes, passes, and AWS symbols

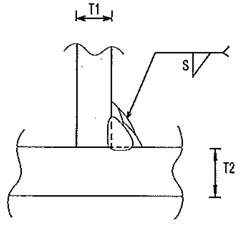

T1 = Varies
T2 = Varies
S = Weld Size

**** T1 & T2 equal to or less than 3/4" for 1/4" welds.**

* Wire feed speed may be used along with amperage (include chart)

Prepared By: ____ DSB QA Manager

Project: ____

DSB Job: 27445-1104

Preheat and Interpass Temperature Chart

Base Metal Thickness range	Minimum Preheat (°F)	Max Preheat & Interpass (°F)
= 3/4"	50°F	450 ° F
>3/4" to =1.5"	70°F	450 ° F
>1.5" to =2.5"	150°F	450 ° F
>2.5"	225°F	450 ° F

Note: When this procedure is used for A709Gr50W materials, it shall be limited to 5/16" single pass or material be coated.

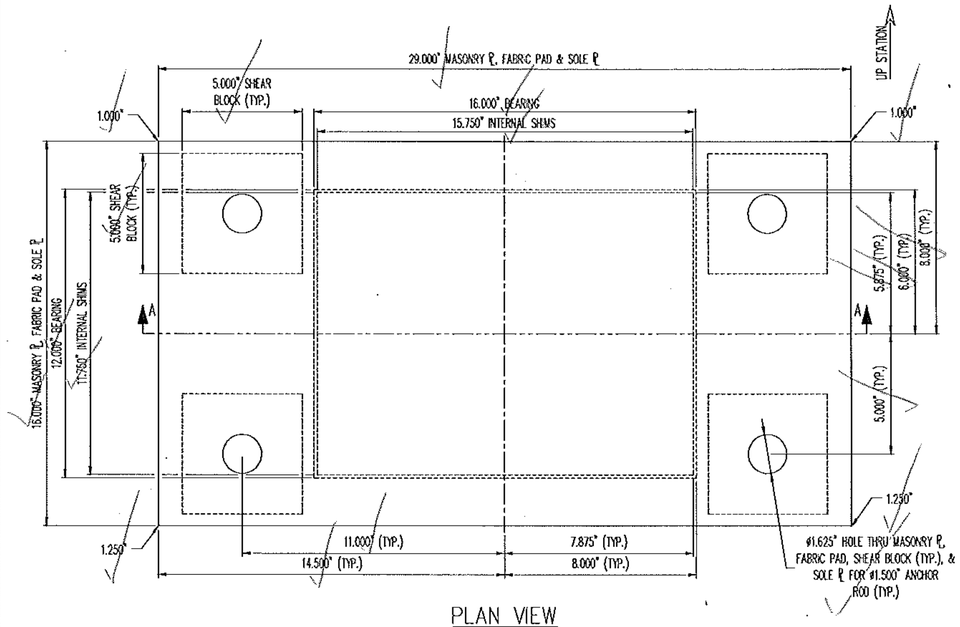

PLAN VIEW
FIXED ELASTOMERIC BEARING
(5) REQ'D @ PIER

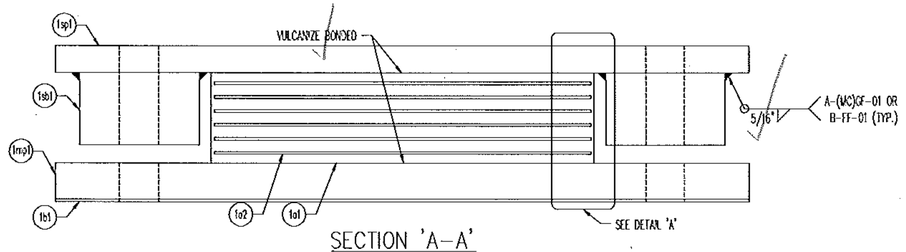

SECTION 'A-A'

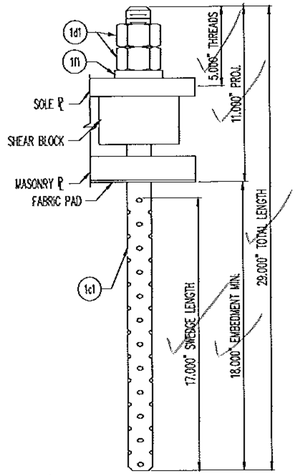

ANCHOR ROD DETAIL

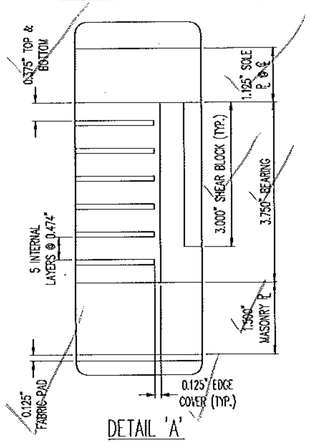

DETAIL 'A'

MK	QTY	DESCRIPTION	MATERIAL	LENGTH	REMARKS	REV
1A	5	ELASTOMERIC BEARING				-
1o1	5	3.750" X 16.000"	NATURAL RUBBER	12.000"	60+/-5 DURO GR.4; 0.13KSI AND 0.20KSI	-
1o2	30	12 GA. X 15.750"	A1011 GR 36	11.750"	PLAIN	-
1rsp1	5	1.500" X 29.000"	A709 GR 50 OR 50W	16.000"	METALIZE, SEAL	-
1sb1	20	3.000" X 5.000"	A709 GR 50 OR 50W	5.000"	METALIZE, SEAL	-
1sp1	5	1.250" X 29.000"	A709 GR 50 OR 50W	16.000"	METALIZE, SEAL	-
1B	5	FABRIC PAD				-
1b1	5	0.125" X 29.000"	AASHTO 18.4.9.1	16.000"	HOLES	-
1C	20	SWEDGE ROD				-
1c1	20	ø1.500" X 29.000" SWEDGED ROD	A449		5" THREADS, 17" SWEDGE; A153-HDG	-
1D	40	HEAVY HEX NUT				-
1d1	40	ø1.500" HEX NUT	A563-DH OR A194-2H		A153-HDG	-
1F	20	WASHER PLATE				-
1f1	20	0.500" X 3.000"	A-36	3.000"	1.563" ø HOLE @ CENTER; A123-HDG	-
					10/5/2009 1:07:03 PM	

A500K

LOAD TABLE	
LIVE LOAD (KIPS)	81.7
DESIGN LOAD (KIPS)	94.2

RECEIVED
OK'D BY SSS OK'D BY Mem
OCT 09 2009
RESUBMIT ____ APPROVED ✓
BY ____ DATE 11/4/2009

SEE SHT. GN1 FOR GENERAL NOTES & COATING LIMITS.

Gen copy

REV.	DESCRIPTION	DATE	DET.	CKD.

D.S. BROWN

THE D.S. BROWN COMPANY
300 E. CHERRY STREET
NORTH BALTIMORE, OHIO 45872
419.257.3561
FAX: 419.257.0332
WWW.DSBROWN.COM

	ITEM	QUANTITY
LOCATION — BRIDGE PROJECT TOWNS OF MORETOWN-MIDDLESEX	27445-1104-1	5 OF 5
BRIDGE — -	-	-
PROJECT — BRS 0284(14)	-	-
—	-	-
P.O. NO. — C-2328	-	-
DESIGNER — VT DOT	-	-
CUSTOMER — WINTERSET INC.	-	-
	-	-

DESCRIPTION	SCALE	DRAWN BY	DESIGNED BY	DATE	
VERSIFLEX ELASTOMERIC BEARING WASHINGTON CO., VT	N.T.S.	DA	DAE	10/9/09	-
	PROJECT NUMBER	PROJECT CODE	RELEASE	SHEET	
	27445	1104	1	01	

SOLE PLATE SCHEDULE

ASSM. MK	LOCATION	QTY	SOLE PLATE		
			T1	T2	SP
2A	ABUT. 1	5	1.125"	1.000"	1.063"
2H	ABUT. 2	5	1.250"	1.000"	1.125"

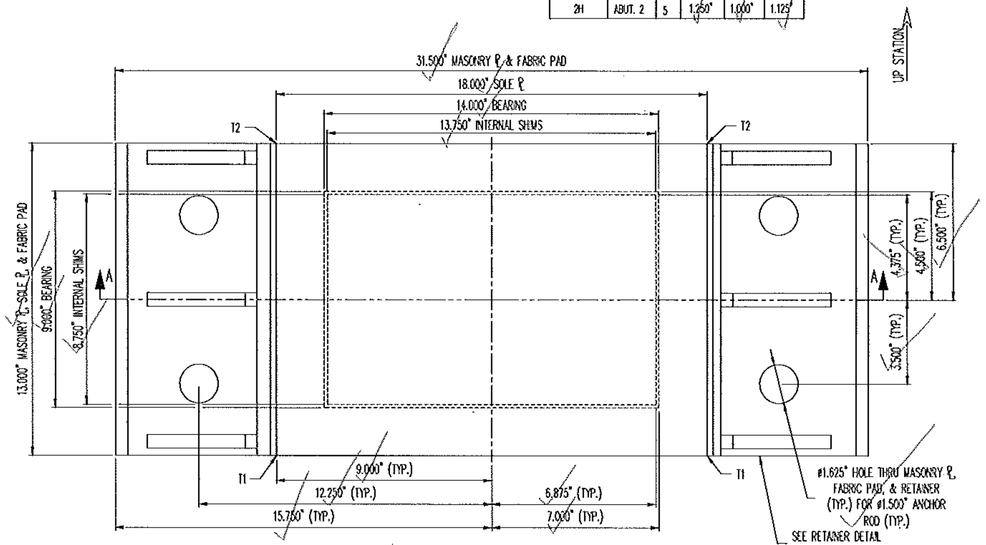

PLAN VIEW

EXPANSION ELASTOMERIC BEARING
(5) REQ'D @ ABUT. 1
(5) REQ'D @ ABUT. 2

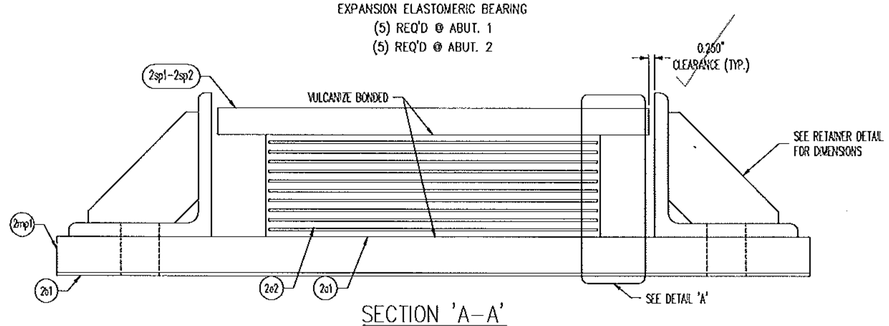

SECTION 'A-A'

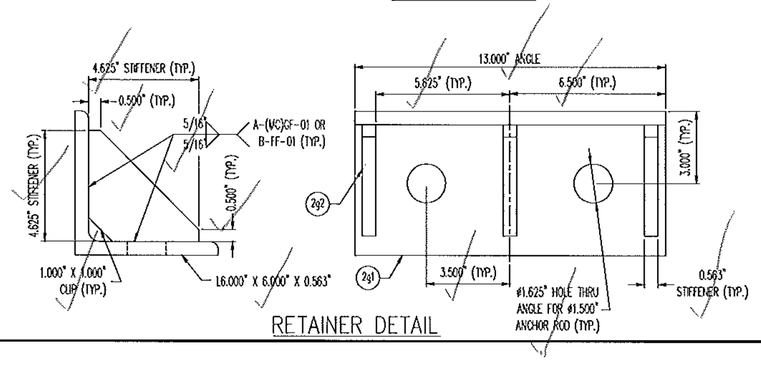

RETAINER DETAIL

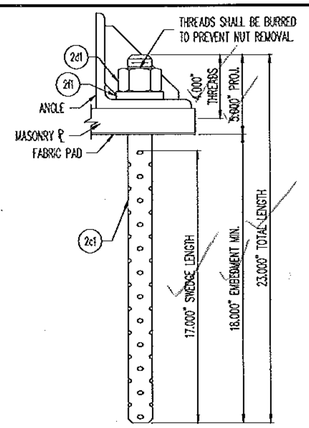

ANCHOR ROD DETAIL

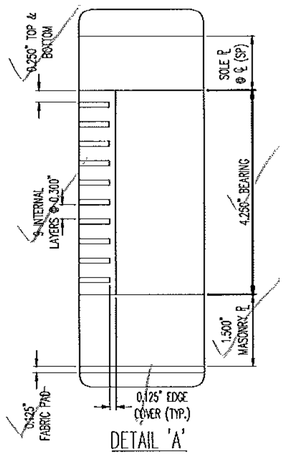

DETAIL 'A'

LOAD TABLE	
LIVE LOAD (KIPS)	81.7
DESIGN LOAD (KIPS)	94.2

MK	QTY	DESCRIPTION	MATERIAL	LENGTH	REMARKS	REV
2A	5	ELASTOMERIC BEARING				-
2c1	5	4.250" X 14.000"	NATURAL RUBBER	9.000"	60+/-5 DURO GR.4; 0.13KSI AND 0.20KSI	-
2c2	50	12 GA. X 13.750"	A1011 GR 36	8.750"	PLAIN	-
2rp1	5	1.500" X 31.500"	A709 GR 50 OR 50W	13.000"	METALIZE, SEAL	-
2sp1	5	1.125" X 18.000"	A709 GR 50 OR 50W	13.000"	METALIZE, SEAL	-
2B	10	FABRIC PAD				-
2b1	10	0.125" X 31.500"	AASHTO 18.4.9.1	13.000"	HOLES	-
2C	40	SWEDGE ROD				-
2c1	40	Ø1.500" X 23.000" SWEDGED ROD	A449		4" THREADS, 17" SWEDGE; A153-HDG	-
2D	40	HEAVY HEX NUT				-
2d1	40	Ø1.500" HEX NUT	A563-DH OR A194-2H		A153-HDG	-
2F	10	WASHER PLATE				-
2f1	40	0.500" X 3.000"	A-36	3.000"	1.563"ø HOLE @ CENTER; A123-HDG	-
2R	20	RETAINER				-
2s1	20	16 X 6 X 9/16	A709 GR 50 OR A992	13.000"	METALIZE, SEAL	-
2s2	60	0.563" X 4.625"	A709 GR 50 OR 50W	4.625"	CUP CORNER; METALIZE, SEAL	-
2H	5	ELASTOMERIC BEARING				-
2a1	5	4.250" X 14.000"	NATURAL RUBBER	9.000"	60+/-5 DURO GR.4; 0.13KSI AND 0.20KSI	-
2a2	50	12 GA. X 13.750"	A1011 GR 36	8.750"	PLAIN	-
2rp1	5	1.500" X 31.500"	A709 GR 50 OR 50W	13.000"	METALIZE, SEAL	-
2sp2	5	1.250" X 18.000"	A709 GR 50 OR 50W	13.000"	METALIZE, SEAL	-
					9/9/2009 9:39:38 AM	

60 50 OK

RECEIVED
OK'D BY SSS OK'D BY mzm
OCT 03 2009
REQUEST ____ APPROVED ✓
BY DATE 10/4/2009

SEE SHT. GN1 FOR GENERAL NOTES & COATING LIMITS.

REV.	DESCRIPTION	DATE	DET.	CKD.

D.S. BROWN
THE D.S. BROWN COMPANY
300 E. CHERRY STREET
NORTH BALTIMORE, OHIO 45872
419.257.3561
FAX: 419.257.0332
WWW.DSBROWN.COM

LOCATION — BRIDGE PROJECT TOWNS OF MORETOWN-MIDDLESEX
BRIDGE — --
PROJECT — BRS 0284(14)

P.O. NO. — C-2326
DESIGNER — VT DOT
CUSTOMER — WINTERSET INC.

ITEM	QUANTITY
27445-1104-2	10 OF 10

DESCRIPTION: VERSIFLEX ELASTOMERIC BEARING
WASHINGTON CO., VT

SCALE	DRAWN BY	DESIGNED BY	DATE	
N.T.S.	DA	DAE	10/9/09	-

PROJECT NUMBER	PRODUCT CODE	RELEASE	SHEET
27445	1104	1	02

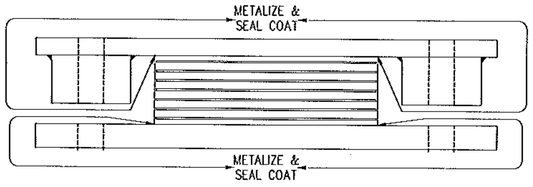

FIXED BEARING COATING LIMITS

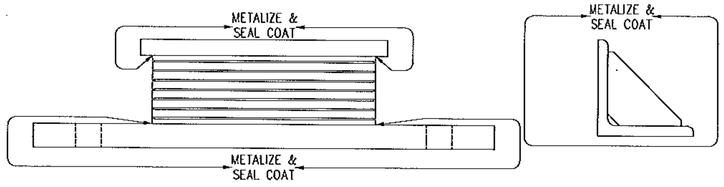

EXPANSION BEARING COATING LIMITS

GENERAL NOTES:

1. PAD AND MATERIALS SHALL CONFORM TO STATE OF VERMONT, AGENCY OF TRANSPORTATION STANDARD SPECIFICATIONS FOR CONSTRUCTION, DATED 2006 AND THE LATEST REVISIONS, AND THE AASHTO LRFD BRIDGE DESIGN SPECIFICATIONS, FOURTH EDITION, DATED 2007, AND ITS LATEST REVISIONS, CONTRACT PLANS, AND THE SPECIAL PROVISIONS. GENERAL SHOP PRACTICES, STRUCTURAL FABRICATION, WELDING AND ASSEMBLY SHALL BE GOVERNED BY ANSI/AASHTO/AWS D1.5 BRIDGE WELDING CODE.

2. THESE SHOP DRAWINGS ARE PREPARED IN ACCORDANCE WITH THE CONTRACT PLANS AND SPECIFICATIONS. THE D.S. BROWN COMPANY DOES NOT ACCEPT LIABILITY FOR THE DESIGN OF THE PRODUCTS DETAILED IN THESE SHOP DRAWINGS.

3. THE D.S. BROWN COMPANY TO SUPPLY ONLY THE PARTS SHOWN ON THESE DRAWINGS.

4. ALL STEEL SHALL BE PRODUCED IN THE UNITED STATES OF AMERICA.

5. THE BEARING SHALL BE SUBJECT TO RANDOM IN-HOUSE ELASTOMER TESTING AND IN-HOUSE PROOF LOAD TESTING IN ACCORDANCE WITH AASHTO DIVISION I, SECTION 14 (METHOD "A") AND AASHTO DIVISION II, SECTION 18.

6. THE TEMPERATURE OF THE STEEL ADJACENT TO THE ELASTOMER SHALL NOT EXCEED 93°C (200°F). TEMPERATURE SHALL BE CONTROLLED BY THE USE OF A TEMPERATURE INDICATING CRAYON OR OTHER DEVICES APPROVED BY THE ENGINEERS.

7. ALL CORNERS AND EDGES OF STEEL PLATES SHALL BE GROUND TO A 0.063" RADIUS.

8. ALL STRUCTURAL STEEL SURFACES TO BE METALIZED SHALL BE CLEANED IN ACCORDANCE WITH SSPC-SP5.

9. ALL SPECIFIED STEEL TO BE ZINC METALIZED IN ACCORDANCE WITH AWS C 2.18 SPECIFICATIONS TO A MINIMUM DRY FILM THICKNESS OF 6 MILS. THE ZINC METALIZED SHALL CONSIST OF 99.9% ZINC. EXTERIOR SURFACES SHALL BE SEALED WITH CARBOLINE SEALER "RUSTABOND" WITH A MINIMUM DRY FILM THICKNESS 2 MILS. SEE COATING LIMITS FOR LOCATIONS.

10. DS BROWN MAY SUBSTITUTE A709 GR. 50W FOR A709 GR. 50 DUE TO AVAILABILITY AT NO ADDITIONAL COST TO THE OWNER OR CONTRACTOR.

TOLERANCE TABLE	
DESCRIPTION (ELASTOMER)	TOLERANCE
OVERALL VERTICAL DIMENSION	+ 1/8", -0
ELASTOMERIC BEARING DESIGN THICKNESS > 1.250"	+ 1/4", -0
ELASTOMERIC BEARING PLAN ≤ 36"	+ 1/4", -0
ELASTOMERIC COVER TOP & BOTTOM	+ 1/8", -0
ELASTOMERIC COVER SIDES	+ 1/8", -0
THICKNESS OF INDIVIDUAL LAYERS OF ELASTOMER (LAMINATED BEARINGS ONLY) AT ANY POINT WITHIN THE BEARING	± 1/8"
VARIATION FROM A PLANE PARALLEL TO THE THEORETICAL SURFACE (AS DETERMINED BY MEASUREMENTS AT THE EDGE OF THE BEARINGS)	
TOP	0.005 RAD
SIDES	± 1/4"
POSITION OF EXPOSED CONNECTION MEMBERS	± 1/8"
EDGE COVER OF EMBEDDED LAMINATES OF CONNECTION MEMBERS	+ 1/8", -0
SIZE OF HOLES, SLOTS, OR INSERTS	± 1/8"
POSITION OF HOLES, SLOTS, OR INSERTS	± 1/8"

MASONRY PL. PLAN DIMENSIONS	±1/4"
MASONRY PL. UNDERSIDE SURFACE FLATNESS	CLASS C
MASONRY PL. UPPERSIDE SURFACE FLATNESS	CLASS A
MASONRY PL. THICKNESS	±1/16"
HOLE LOCATION	±1/16"
SOLE PL. PLAN DIMENSIONS	±1/16"
SOLE PL. UNDERSIDE SURFACE FLATNESS	CLASS A
SOLE PL. UPPERSIDE SURFACE FLATNESS	CLASS C
SOLE PL. BEVEL SLOPE	± 0.002 RAD
SOLE PL. THICKNESS	±1/16"
MASONRY & SOLE PLATE SURFACE FINISH (BEARING SIDE)	125 RMS

FLATNESS TOLERANCE	
CLASS	X NOM. DIM.
A	0.001
B	0.002
C	0.005

RECEIVED
OK'D BY SSS OK'D BY Mem
OCT 0 9 2009
RESUBMIT ____ APPROVED 11/4/2009
BY DATE ✓

REV.	DESCRIPTION	DATE	DET.	CKD.

D.S. BROWN
THE D.S. BROWN COMPANY
300 E. CHERRY STREET
NORTH BALTIMORE, OHIO 45872
419.257.3551
FAX: 419.257.0332
WWW.DSBROWN.COM

LOCATION --- BRIDGE PROJECT TOWNS OF MORETOWN-MIDDLESEX
BRIDGE --- -
PROJECT — BRS 0284(14)
—
P.O. NO. --- C-2326
DESIGNER --- VT DOT
CUSTOMER --- WINTERSET INC.

ITEM	QUANTITY
-	-
-	-
-	-
-	-
-	-
-	-
-	-
-	-
-	-

DESCRIPTION: GENERAL NOTES & COATING LIMITS
WASHINGTON CO., VT

SCALE:	DRAWN BY:	CHECKED BY:	DATE:	
N.T.S.	DA	DAE	10/9/09	-
PROJECT NUMBER: 27445	PRODUCT CODE: 1104	RELEASE: 1	SHEET: GN1	