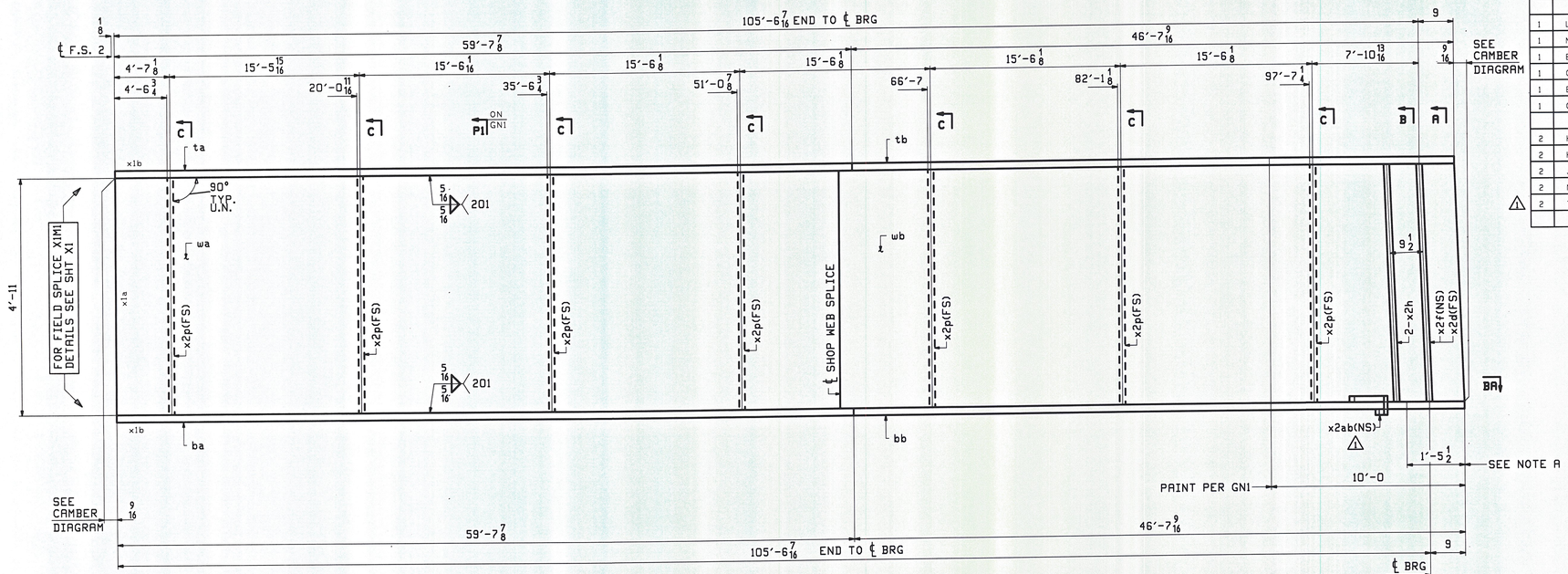

ABM INFO		SHIP	BILL OF MATERIAL					JOB NO.	DRAWING NO.	REV.
									9	
PAGE	LINE	MARK	QTY	MARK	MATERIAL	LENGTH FT	LENGTH INCHES	REMARKS	WT	PROCUREMENT NOTES
		SGSC	1		GIRDER				27149	
1	L		1	wa	PL 3/4x59	58	6 7/8	M270-50WT2 (H2-3)		
1	N		1	wb	PL 3/4x59	47	9 1/2	M270-50WT2 (H2-3)		
1	E		1	ta	PL 7/8x16	59	7 7/8	M270-50WT2 (H2-3)		
1	G		1	tb	PL 7/8x16	46	7 7/16	M270-50WT2 (H2-3)		
1	E		1	ba	PL 7/8x16	59	7 7/8	M270-50WT2 (H2-3)		
1	G		1	bb	PL 7/8x16	46	7 9/16	M270-50WT2 (H2-3)		
2	H		1	x2d	PL 3/4x8 1/2	4	11 1/16	MIE BEV		
2	H		1	x2f	PL 3/4x8 1/2	4	11 1/16	MIE BEV		
2	J		2	x2h	PL 3/4x7	4	11	MIE		
2	M		7	x2p	PL 3/4x7	4	11			
2	T		1	x2ab	PL 1/4x2 7/8	0	11			

ONE - GIRDER - 9G5C

FOR FIELD SPLICE & STANDARD DETAILS SEE X SHEETS
FOR CAMBER & FLANGE DIAGRAM SEE SHEET C3
FOR GENERAL NOTES SEE SHEET GN1

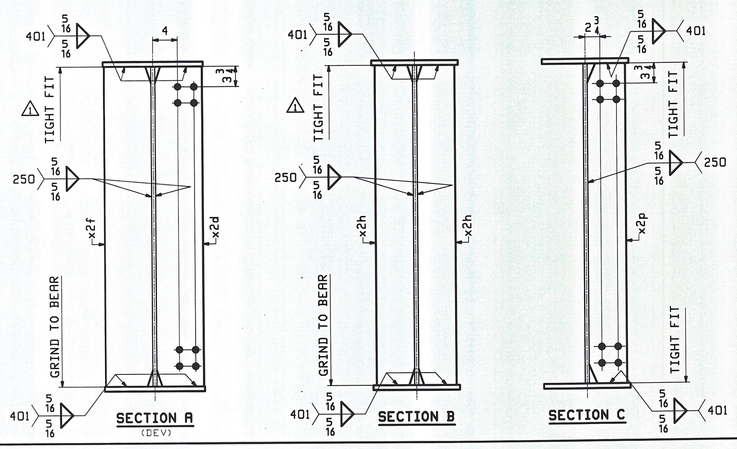

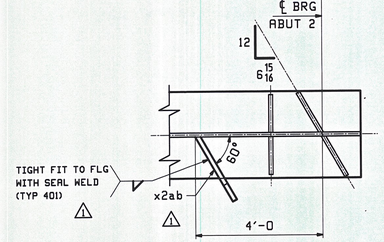

SECTION BA

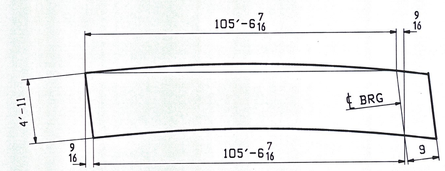

ORIENTATION DIAGRAM

NOTE A:
NO PAINT BOTTOM AND EDGES OF BOTTOM FLANGE.

RECEIVED
OKDBY SSS OKDBY MJM
NOV 1552
11/5/09

REV.	DATE	REMARKS	DWN	CHK	APVL	SHOP
1	10/19	REVISED PER APPROVAL	WJF	PCP	NOV 0 2 2009	
0					AUG 2 7 2009	

MATERIAL: M270-50W (UN)
SURFACE PREP. & PAINT: SEE GN1
HOLES: 15/16"Ø U.N.
SHOP BOLTS: NONE

DESCRIPTION: GIRDER - 9G5C

CASCO BAY STEEL STRUCTURES, INC.
75 SPRING HILL ROAD SACO, MAINE 04072
PHONE (207) 282-7360 FAX. (207) 282-1179
TENSOR 2006

STRUCTURE: US RTE 2 OVER WINOOSKI RIVER
WASHINGTON COUNTY, VT

	DRAWN:	DATE:
	WJF	08/13
	CHKD:	DATE:
	PCP	08/17

LOCATION: TOWNS OF MORETOWN ~ MIDDLESEX, VT
PROJ NO. BRS 0284(14)
CUSTOMER: WINTERSET INC.

JOB NO.	DWG NO.
421-1	9
	REV. 1

PCP Mon, Oct 19, 2009 09:41:06 AM /users/jobs/2005/9.1.9x1