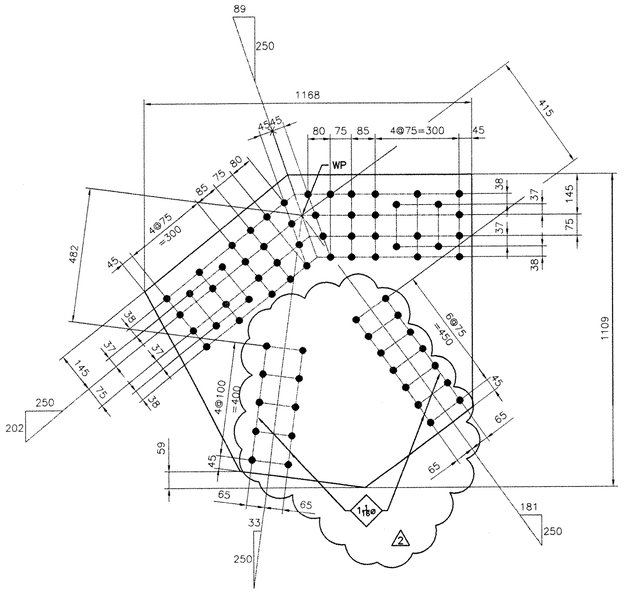


ITEM x160pa (8 REQ'D)
(PL18x1109x1168)
M270M-GR345 (CVN) (ABM #66)

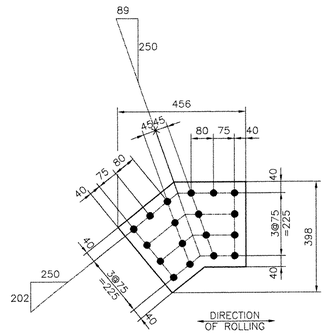


ITEM x160pb (8 REQ'D)
(PL18x398x456)
M270M-GR345 (CVN) (ABM #58)

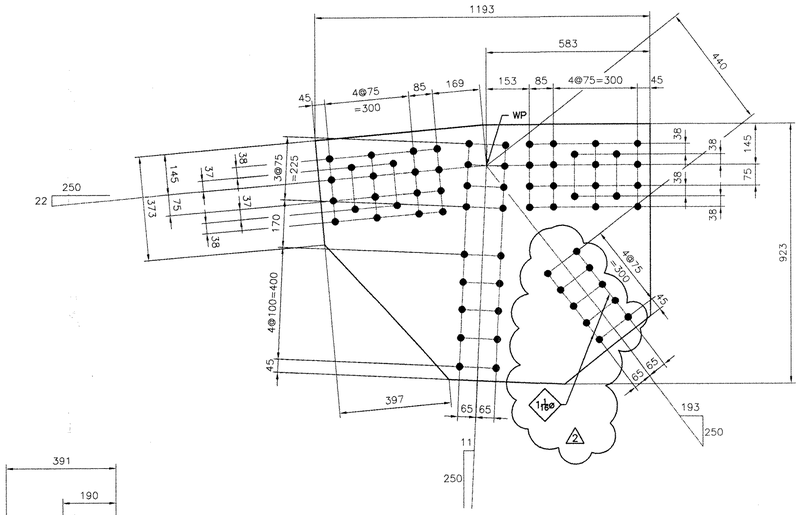


ITEM x160pc (8 REQ'D)
(PL18x923x1193)
M270M-GR345 (CVN) (ABM #67)

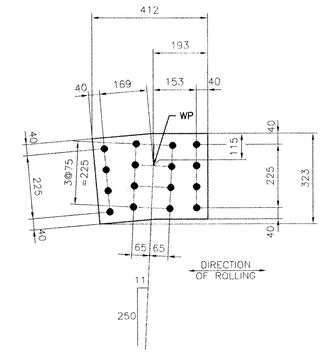


ITEM x160pd (8 REQ'D)
(PL18x323x412)
M270M-GR345 (CVN) (ABM #58)

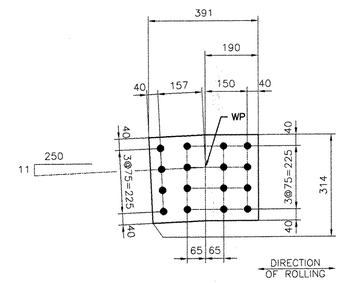


ITEM x160pg (8 REQ'D)
(PL18x314x391)
M270M-GR345 (CVN) (ABM #58)

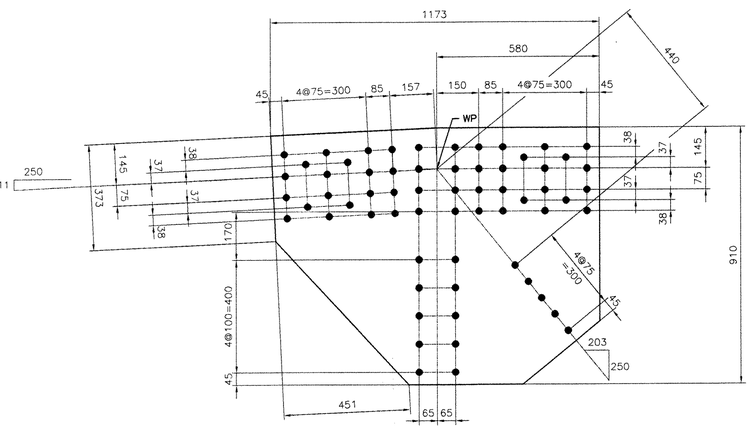


ITEM x160pf (8 REQ'D)
(PL18x910x1173)
M270M-GR345 (CVN) (ABM #68)

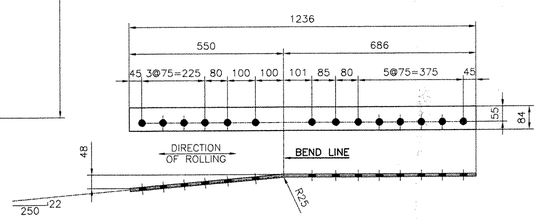


ITEM x160ph (2 REQ'D)
(PL10x84x1236)
M270M-GR345 (CVN) (ABM #59)

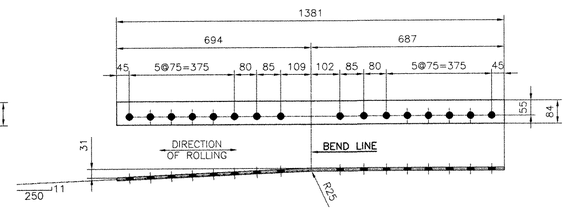


ITEM x160pk (2 REQ'D)
(PL10x84x1381)
M270M-GR345 (CVN) (ABM #59)

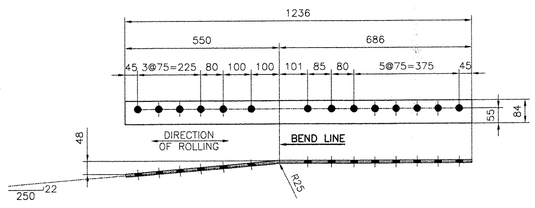


ITEM x160pn (2 REQ'D)
(PL10x84x1236)
M270M-GR345 (CVN) (ABM #59)

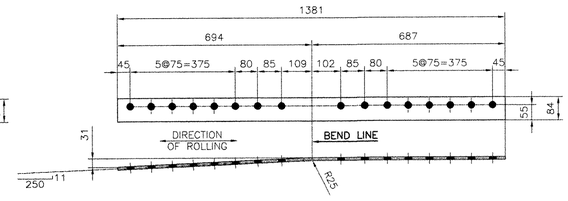


ITEM x160pm (2 REQ'D)
(PL10x84x1381)
M270M-GR345 (CVN) (ABM #59)

NOTES:

1- GENERAL NOTES: SEE GN101
2- HOLES: 15/16ø (24ø) (UN)
3- ALL STEEL SHALL BE GALVANIZED, SEE GN101
4- ALL MATERIAL SHALL BE M270M-GR345 (UN)
5- ALL HOLES SHALL BE "CNC" DRILLED (UN)

RECEIVED
CK'D BY _____ OK'D BY WEM
AUG 24 2005
RESUBMIT _____ APPROVED _____
BY DATE 9/23/05

RESERVED FOR STAMPS

| REV | DATE | DESCRIPTION |
|---|---|---|
| 2 | 8/17/05 | AS PER REVISED DESIGN |
| 1 | 6/20/05 | AS PER APPROVAL COMMENTS |

| QTY | DATE | ISSUED TO | FOR |
|---|---|---|---|
| 8 | 8/22/05 | F.W. Whitcomb | Approval |
| 8 | 4/8/05 | F.W. WHITCOMB CONSTRUCTION | APPROVAL |

NOTICE
This drawing shall not be used or reproduced in any manner, nor shall any similar drawings or structures be made therefrom, nor shall the information thereon be used for any purpose other than that for which it is released without the written consent of an officer of EASTERN BRIDGE LLC.

tenca 1010

EASTERN BRIDGE LLC
RURAL RTE 2, BOX 302
CLAREMONT, NH 03743
603-542-5202

PROJECT: ROUTE 100 OVER THE WEST RIVER
LOCATION: TOWN OF JAMAICA
ENGINEER: CLD CONSULTING ENGINEERS
CUSTOMER: VERMONT A. O. T.
DRAWING TITLE: DETAILS
DRAWN BY: BR 03/04/05 | JOB NUMBER: 5075 | SHEET NUMBER: X160
CHECKED BY: GG 03/30/05

186 55