BILL OF MATERIAL										
Drawing Number	Revision Number	Ship Mark	Piece Mark	Qty	Type of Material	Size of Material	Grade	Length	Finish	Notes
124		124FB		2			Total weight:		8100 kg	
124		124FB	ma124	2	W Wide Flng	760x350	M270M-GR345	10834	CVN	1
124		124FB	x150mb	20	L Angles	102x102x9.5	M270M-GR345	220	CVN	5
124		124FB	x150mc	8	L Angles	102x102x13	M270M-GR345	680	CVN	2
124		124FB	x151pn	2	PL Plate	14x900	M270M-GR345	1110		49
124		124FB	x151pp	4	PL Plate	14x370	M270M-GR345	790		47

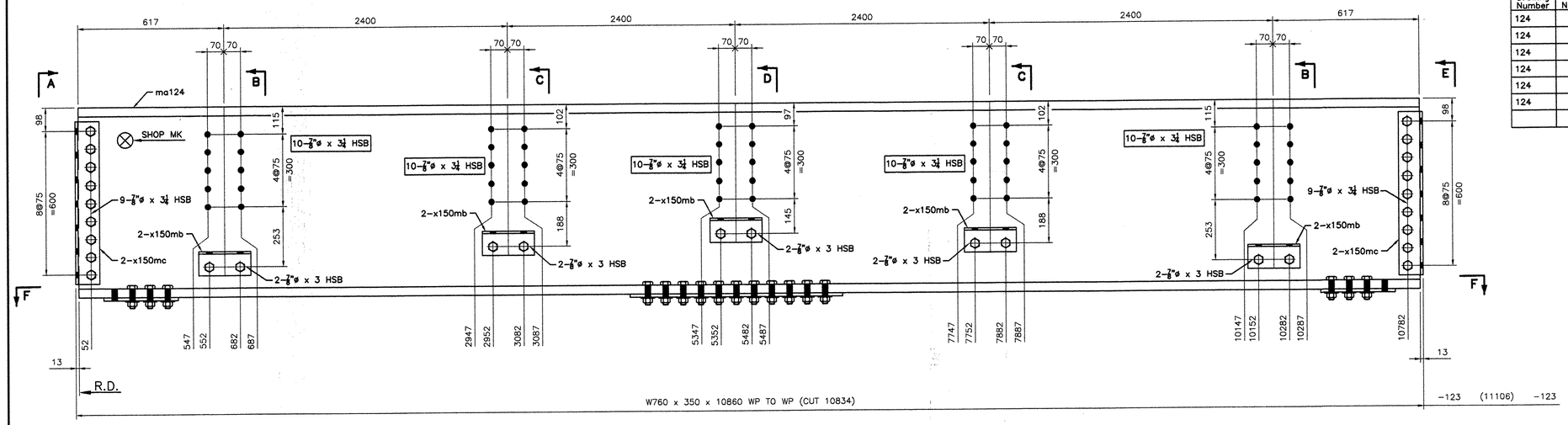

W	795 x 21.1
F	382 x 38.1

2 – FLOOR BEAMS – 124FB

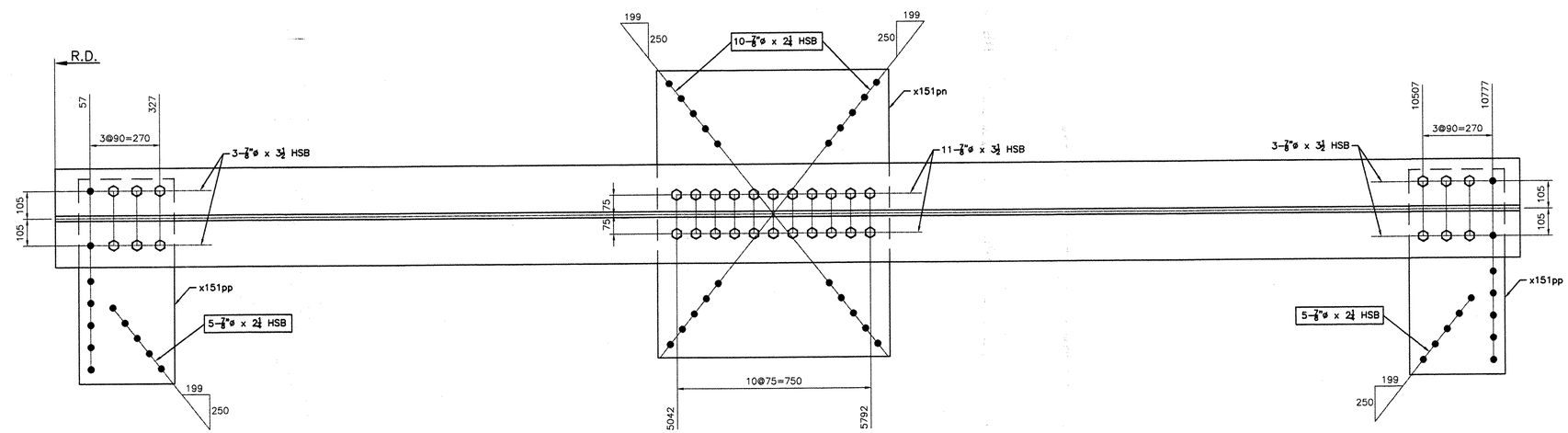

SECTION F

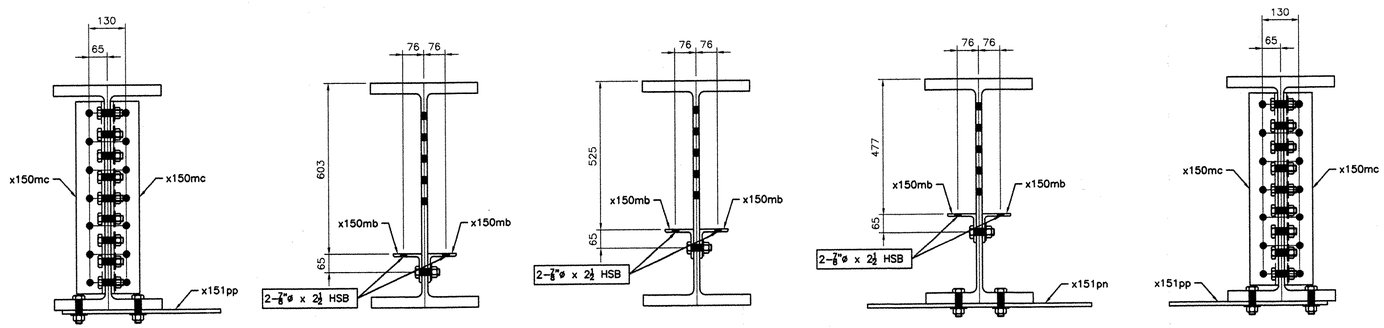

SECTION A SECTION B SECTION C SECTION D SECTION E

BOLTS LIST		
QTY	DESCRIPTION	LENGTH
	SHOP BOLTS LIST	
20	7/8"ø HSB	3
36	7/8"ø HSB	3 1/4
68	7/8"ø HSB	3 1/2
	FIELD BOLTS LIST	
60	7/8"ø HSB	2 1/4
40	7/8"ø HSB	2 1/2
100	7/8"ø HSB	3 1/4

NOTES:

1- GENERAL NOTES: SEE GN101
2- HOLES: 15/16ø (24ø) (UN)
3- ALL HS BOLTS SHALL BE A325 TYPE 1 GALVANIZED C/W 1 NUT & 1 WASHER (UN)
4- ALL STEEL SHALL BE GALVANIZED, SEE GN101
5- ALL SHOP BOLTS SHALL BE HAND TIGHTEN
6- ALL HOLES SHALL BE "CNC" DRILLED (UN)
7- WIRE-BRUSH PREPARATION 3" OF OPEN HOLES FOR FAYING SURFACES PRIOR TO BOLTING

RESERVED FOR STAMPS

REV	DATE	DESCRIPTION
△	-	-

QTY	DATE	ISSUED TO	FOR
8 -	4/8/05	F.W. Whitcomb Construction	Approval

NOTICE
This drawing shall not be used or reproduced in any manner, nor shall any similar drawings or structures be made therefrom, nor shall the information thereon be used for any purpose other than that for which it is released without the written consent of an officer of EASTERN BRIDGE LLC.

EASTERN BRIDGE LLC
RURAL RTE 2, BOX 302
CLAREMONT, NH 03743
603-542-5202

PROJECT: ROUTE 100 OVER THE WEST RIVER
LOCATION: TOWN OF JAMAICA
ENGINEER: CLD CONSULTING ENGINEERS
CUSTOMER: VERMONT A. O. T.
DRAWING TITLE: FLOOR BEAMS
DRAWN BY: YT 03/11/05
CHECKED BY: GG 03/24/05
JOB NUMBER: 5075
SHEET NUMBER: 124

16355