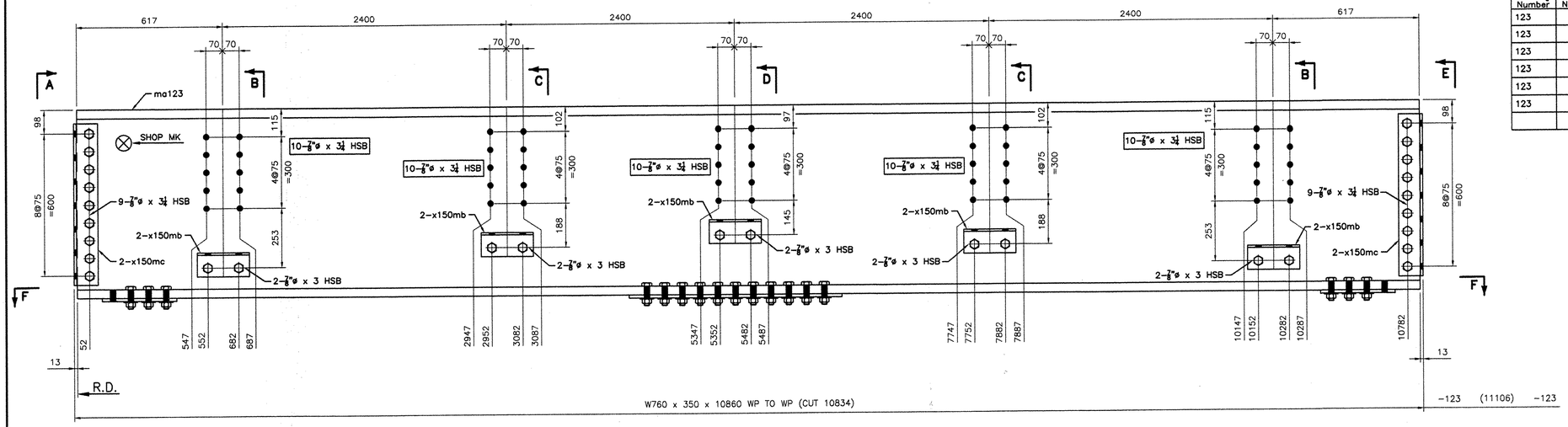

W	795 x 21.1
F	382 x 38.1

4 – FLOOR BEAMS – 123FB

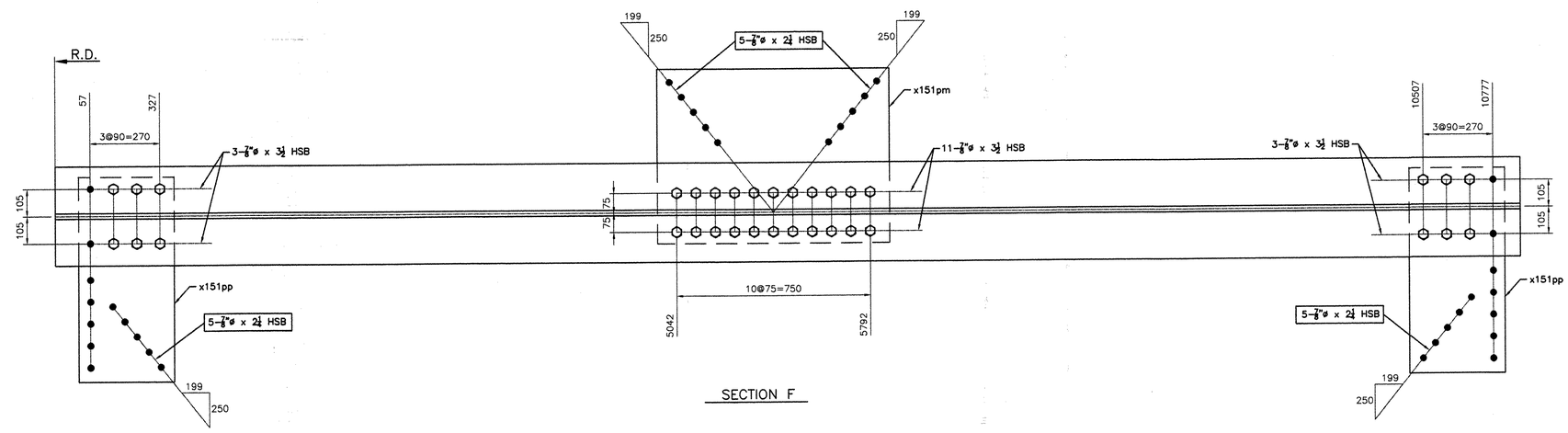

SECTION F

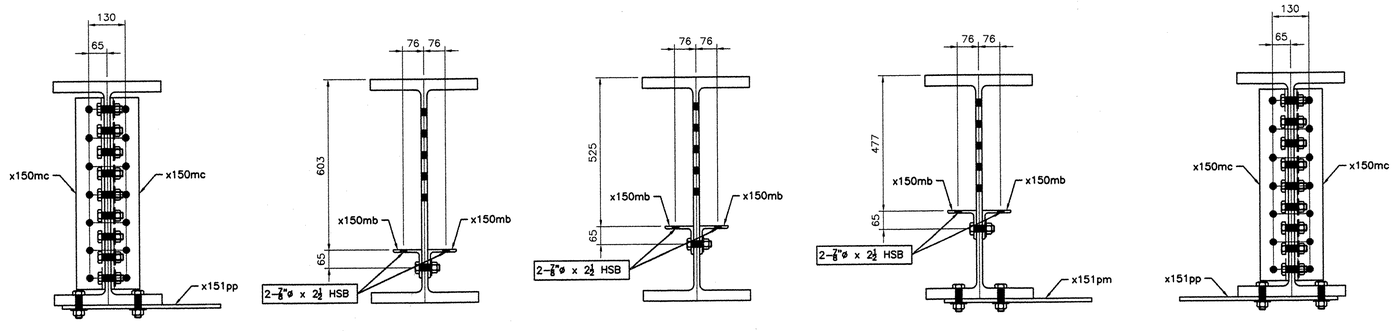

SECTION A | SECTION B | SECTION C | SECTION D | SECTION E

NOTES:

1– GENERAL NOTES: SEE GN101
2– HOLES: 15/16ø (24ø) (UN)
3– ALL HS BOLTS SHALL BE A325 TYPE 1 GALVANIZED C/W 1 NUT & 1 WASHER (UN)
4– ALL STEEL SHALL BE GALVANIZED, SEE GN101
5– ALL SHOP BOLTS SHALL BE HAND TIGHTEN
6– ALL HOLES SHALL BE "CNC" DRILLED (UN)
7– WIRE-BRUSH PREPARATION 3" OF OPEN HOLES FOR FAYING SURFACES PRIOR TO BOLTING

NOTICE
This drawing shall not be used or reproduced in any manner, nor shall any similar drawings or structures be made therefrom, nor shall the information thereon be used for any purpose other than that for which it is released without the written consent of an officer of EASTERN BRIDGE LLC.

BILL OF MATERIAL

Drawing Number	Revision Number	Ship Mark	Piece Mark	Qty	Type of Material	Size of Material	Grade	Length	Finish	Notes
123		123FB		4			Total weight:		16028 kg	
123		123FB	ma123	4	W Wide Flng	760x350	M270M-GR345	10834	CVN	1
123		123FB	x150mb	40	L Angles	102x102x9.5	M270M-GR345	220	CVN	5
123		123FB	x150mc	16	L Angles	102x102x13	M270M-GR345	680	CVN	2
123		123FB	x151pm	4	PL Plate	14x675	M270M-GR345	900		48
123		123FB	x151pp	8	PL Plate	14x370	M270M-GR345	790		47

BOLTS LIST

QTY	DESCRIPTION	LENGTH
	SHOP BOLTS LIST	
40	7/8"ø HSB	3
72	7/8"ø HSB	3 1/4
136	7/8"ø HSB	3 1/2
	FIELD BOLTS LIST	
80	7/8"ø HSB	2 1/4
80	7/8"ø HSB	2 1/2
200	7/8"ø HSB	3 1/4

RESERVED FOR STAMPS

REV	DATE	DESCRIPTION
△	-	-

QTY	DATE	ISSUED TO	FOR
8 -	4/8/05	F.W. Whitcomb Construction	Approval

EASTERN BRIDGE LLC
RURAL RTE 2, BOX 302
CLAREMONT, NH 03743
603-542-5202

PROJECT: ROUTE 100 OVER THE WEST RIVER
LOCATION: TOWN OF JAMAICA
ENGINEER: CLD CONSULTING ENGINEERS
CUSTOMER: VERMONT A. O. T.
DRAWING TITLE: FLOOR BEAMS

DRAWN BY: YT	03/09/05	JOB NUMBER: 5075	SHEET NUMBER: 123
CHECKED BY: GG	03/24/05		

16255