Metric

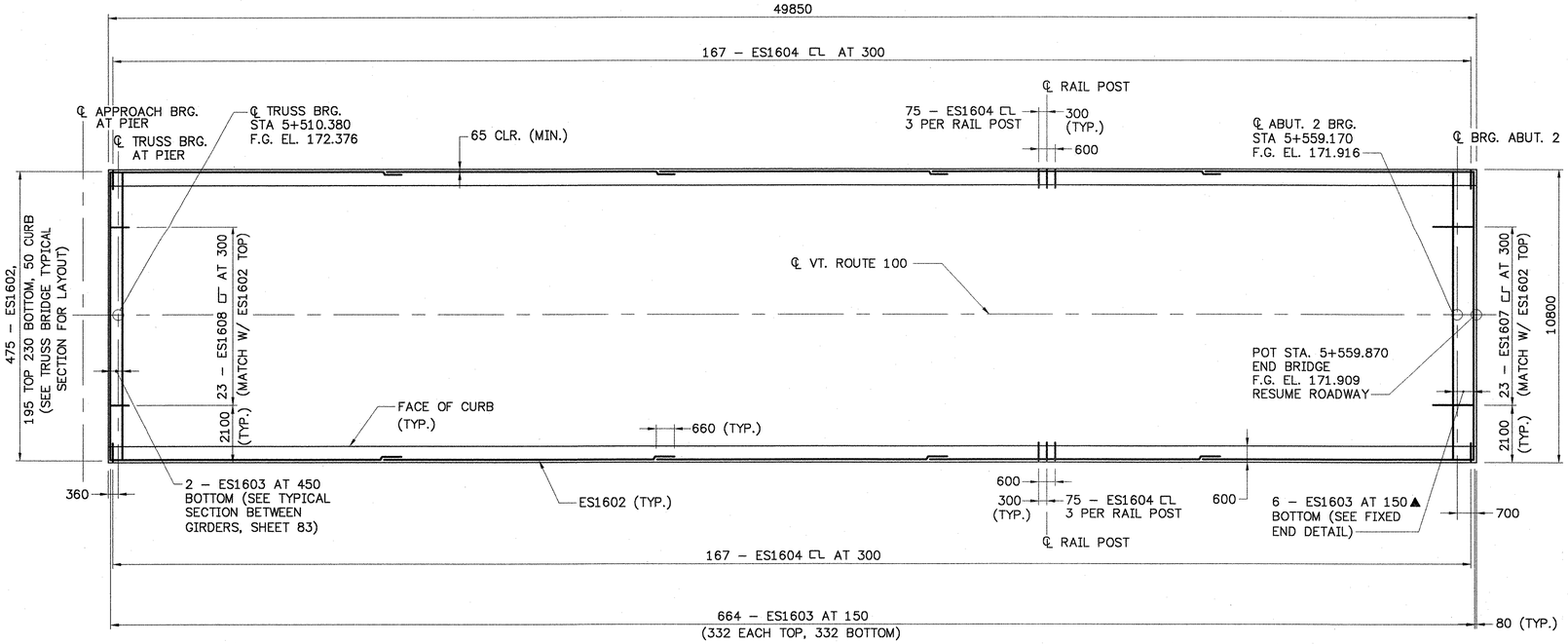

TRUSS BRIDGE DECK PLAN

SCALE 1:100

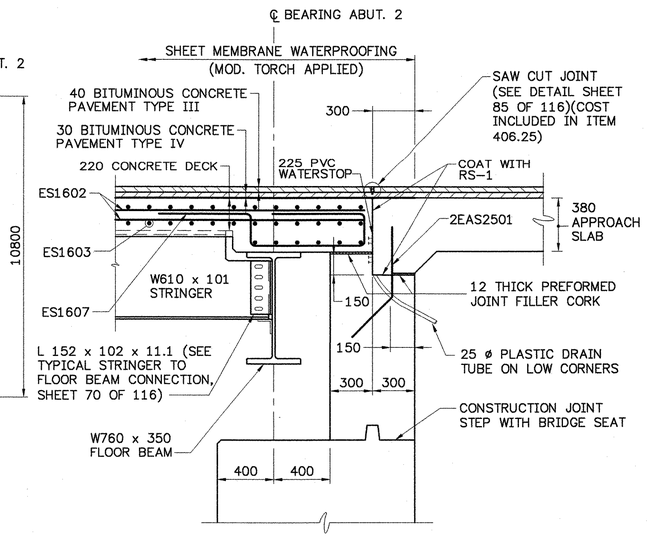

FIXED END DETAIL AT ABUTMENT NO. 2

SCALE 1:20

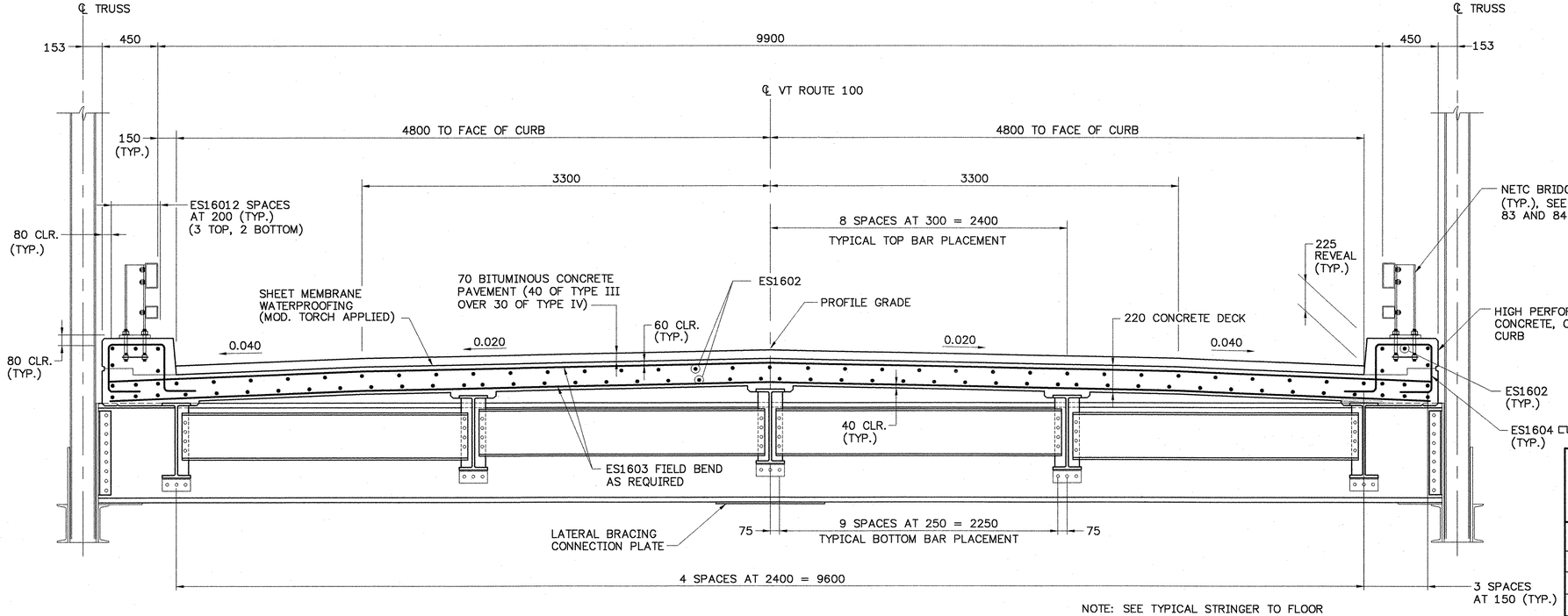

NOTE: SEE TYPICAL STRINGER TO FLOOR BEAM CONNECTION, SHEET 70 OF 116

TRUSS BRIDGE TYPICAL DECK SECTION

SCALE 1:20

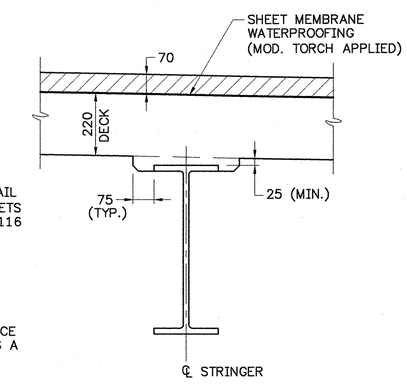

STRINGER HAUNCH DETAIL

SCALE 1:10

STATE OF VERMONT
AGENCY OF TRANSPORTATION

Town Of	JAMAICA	Bridge No.	80
		Log Sta.	
Highway No.	VT. ROUTE 100	Surv. Sta.	

VT. ROUTE 100 OVER THE WEST RIVER

DECK DETAILS – TRUSS

Designed By	JH	Drawn By.	MWS
Checked By	LMM Date 2/02	Bridge Design Supervisor	LMM Date 2/02
PROJECT	JAMAICA	PROJECT NO.	BRF 013–1(8)
I.G.C. Info.			
Bridge Sheet No.		Sheet 66 Of 116	

CLD CONSULTING ENGINEERS
540 Commercial St.
Manchester, NH 03101
PH: (603) 668-8223
FAX: (603) 668-8802
E-MAIL: CLD@CLDENGINEERS.COM

90284TDD.dwg (1=1)