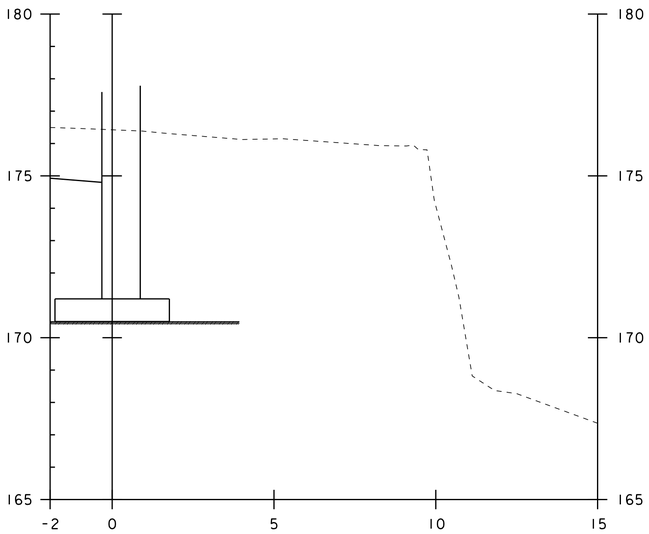

2+011.36

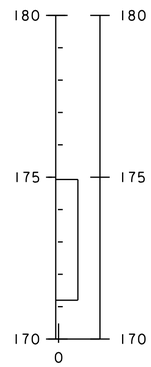

2+011.36

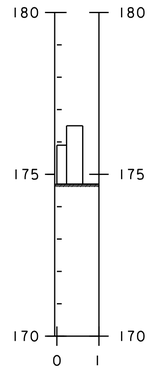

2+014.36

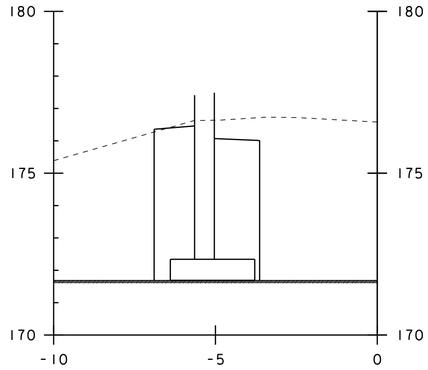

3+135.65

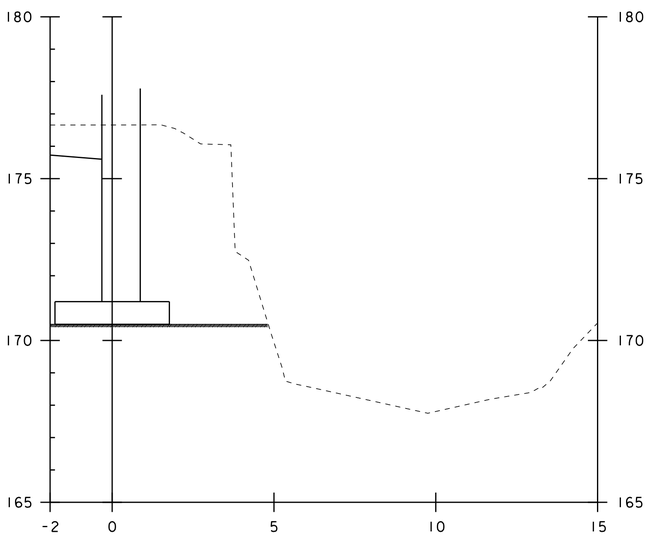

2+000.00

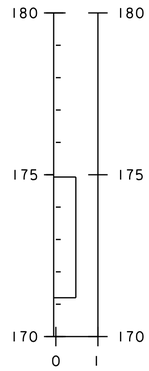

2+009.66

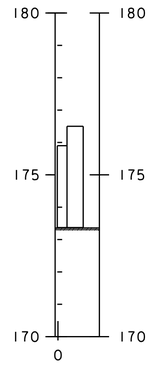

2+011.36

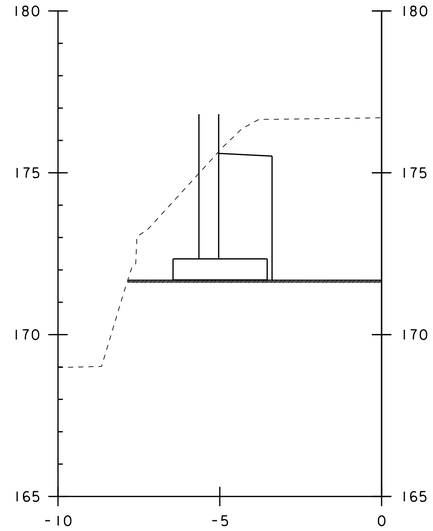

3+124.65

ABUTMENT TWO
GRANULAR BACKFILL FOR STRUCTURES

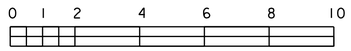

SCALE = 1:100