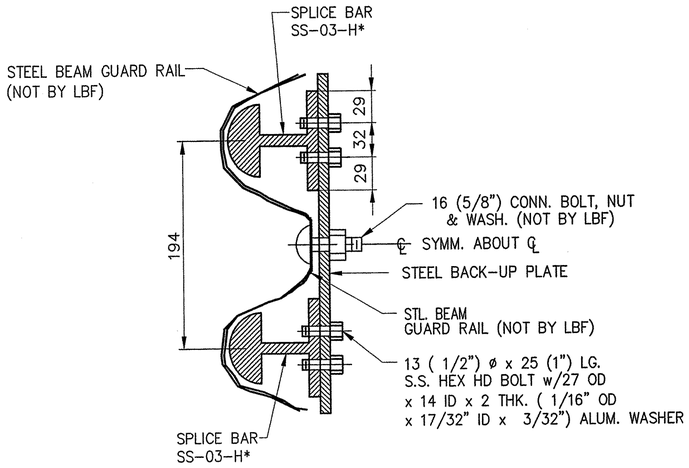

SECTION A-A
(SEE LB5, LB6 or LB7)

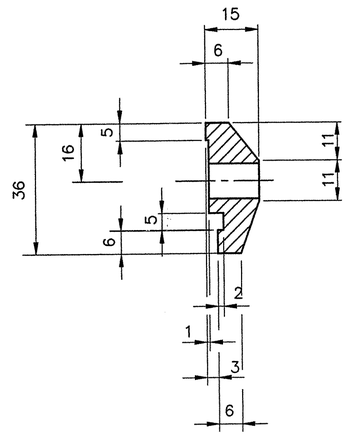

SECT. E-E
CB-01-B (HANDRAIL)
#28596

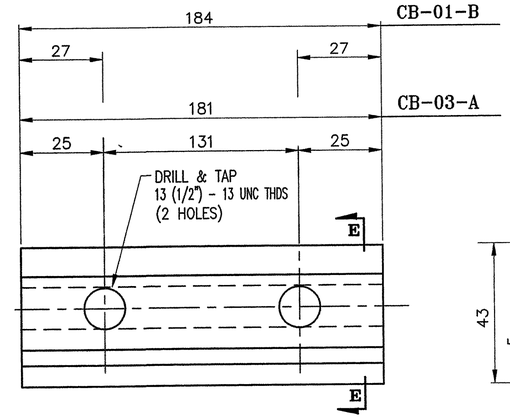

128 ~ REQ'D CLAMP BARS CB-03-A
(BARRIER #19447)

32 ~ REQ'D CLAMP BARS CB-01-B
(HANDRAIL #28596)

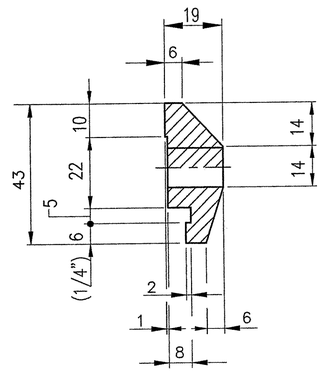

SECT. E-E
CB-03-A (BARRIER)
#19447

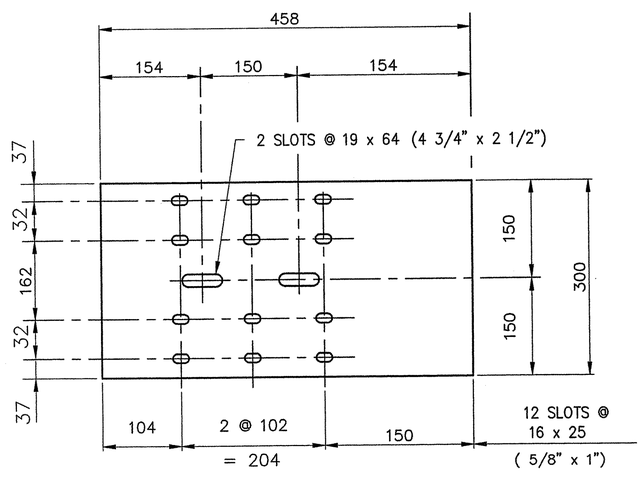

4 REQ'D. ~ BACK-UP PLATE BUP1
(6 THK. PLATE ~ A36 - GALV.)
#14560

ANODIZED
(SEE LB1 FOR SPECIFICATIONS)

RECEIVED
CK'D BY ____ CK'D BY ____
FEB 23 2006
RESUBMIT ____ APPROVED ✓
BY WY DATE 2/22/06

REV.	DESCRIPTION	BY	DATE

PROJ. No. BRS 0113 (22) ITEM No: 621.74

APPROVED: ____ REC'D APPROVAL ____ DRAWING ____

L.B. FOSTER COMPANY
1016 GREENTREE ROAD
PITTSBURGH, PENNSYLVANIA 15220

FOR: A. D. ROSSI CORPORATION
VERMONT AGENCY OF TRANSPORTATION
TOWN OF HARTLAND, COUNTY OF WINDSOR
BRIDGE #60 - US RTE 5 OVER LULLS BROOK
3L ALUMINUM APPROACH RAIL ~ MISC DETAILS

MADE CMS DATE 06/06/05 JOB No. AR0200 CUST. No.
CHECK Dd DATE 11/8/05 DRAWING LB16 (LAST) REV. No.

1696R