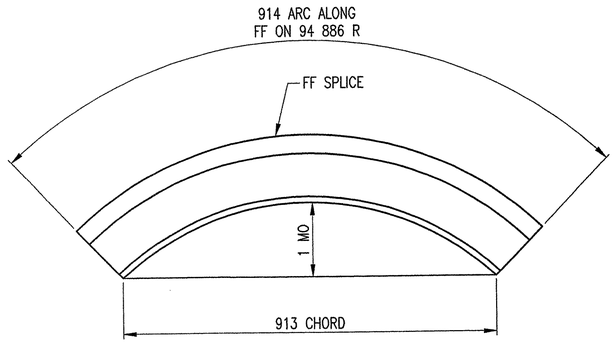

PLAN VIEW

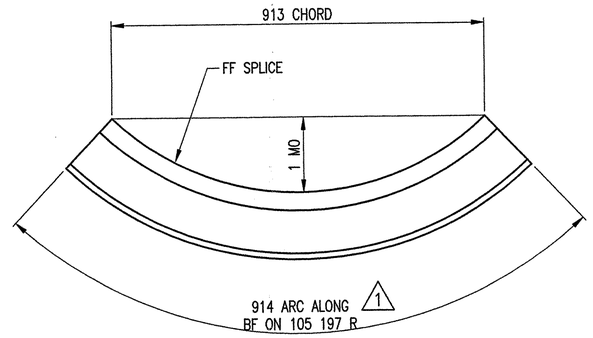

PLAN VIEW

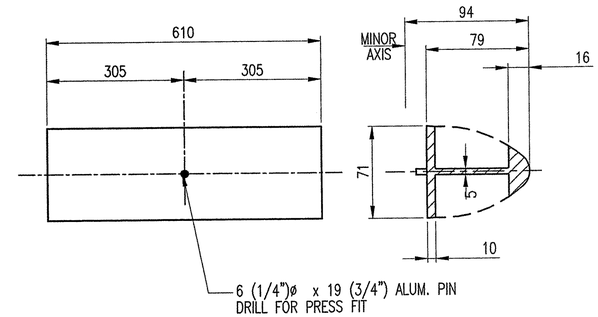

14 ~ REQ'D SPLICE SLEEVES SS-12-A
(HANDRAIL) #19497 EXTR., #14940 PIN

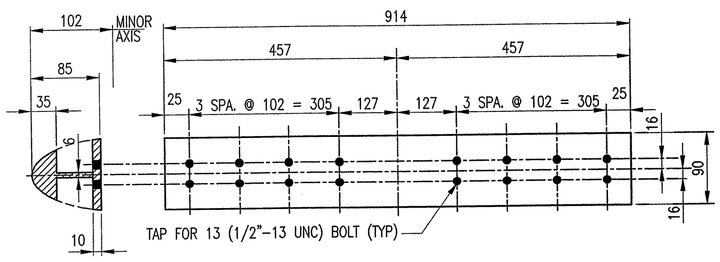

14 ~ REQ'D BENT SPLICE SLEEVES SS-03-G2
#19501 EXTR.

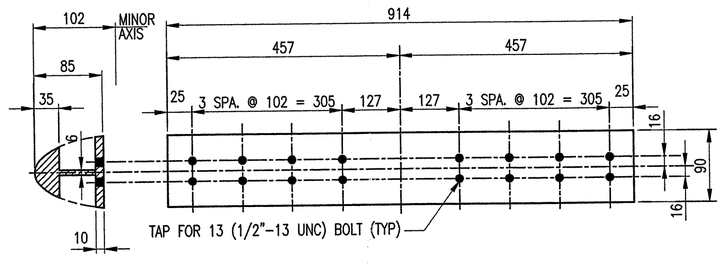

10 ~ REQ'D BENT SPLICE SLEEVES SS-03-G1
(FOR BARRIER RAIL - BACK ELEV. VIEW) #19501 EXTR.

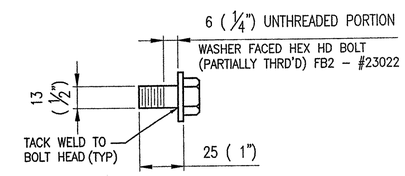

SPLICE BOLT DETAILS

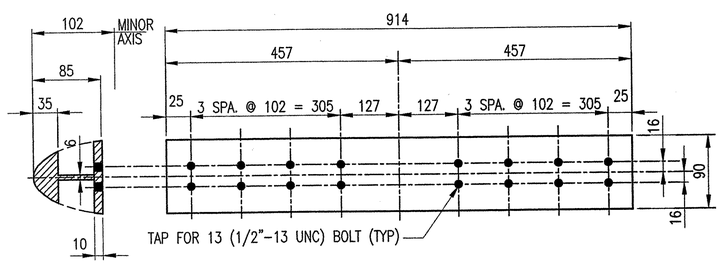

4 ~ REQ'D SPLICE SLEEVES SS-03-G
#19501 EXTR.

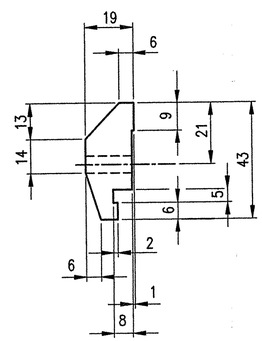

212 ~ REQ'D CLAMP
BAR CB-03-A
(BARRIER RAIL) #19447

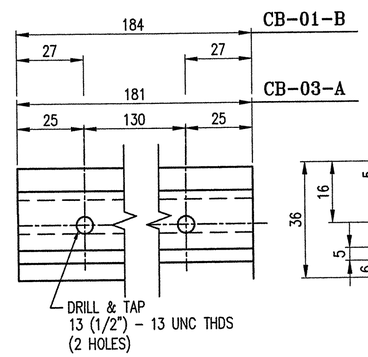

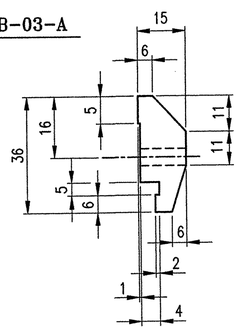

106 ~ REQ'D CLAMP
BAR CB-01-B
(HANDRAIL) #28596

ANODIZED
(SEE LB1 FOR SPECIFICATIONS)

BRIDGE No. 60
PROJ. No: BRS 0113 (22)
ITEM 525.22

APPROVED: _____ REC'D APPROVAL _____ DRAWING _____

RECEIVED
CK'D BY _____ CK'D BY _____
FEB 23 2006
RESUBMIT _____ APPROVED ✓
BY Wy S/S DATE 2/26/06

REV.	DESCRIPTION	BY	DATE
1	REVISED PER VTDOT CHGS IN BRIDGE LENGTHS	CMS	01 31 06

L.B. FOSTER COMPANY
1016 GREENTREE ROAD
PITTSBURGH, PENNSYLVANIA 15220

FOR: A. D. ROSSI CORPORATION
VERMONT AGENCY OF TRANSPORTATION
TOWN OF HARTLAND, COUNY OF WINDSOR
3-LINE SEMI-ELLIP. ALUMINUM BRIDGE RAIL FOR U.S. RTE. 5
OVER LULLS BROOK - SPLICE & MISC DETAILS

MADE CMS DATE 06/13/03 JOB No. AR0200 CUST. No.
CHECK Dd DATE 11/7/05 DRAWING LB4 REV. No. ONE

152bR