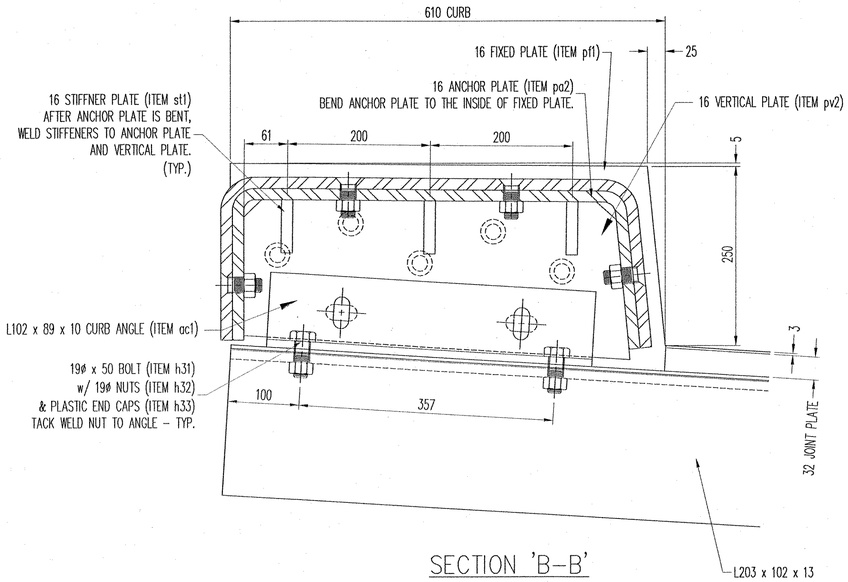

SECTION 'B–B'

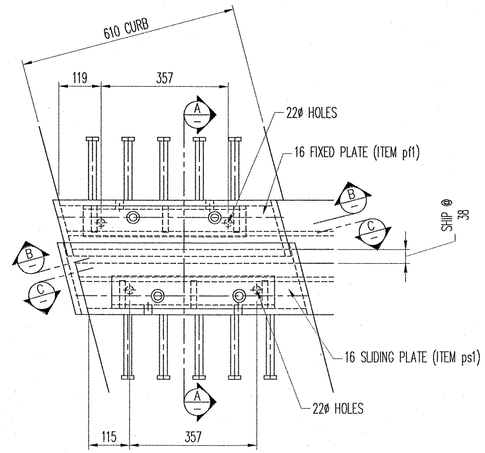

CURB COVER PLATE PLAN VIEW

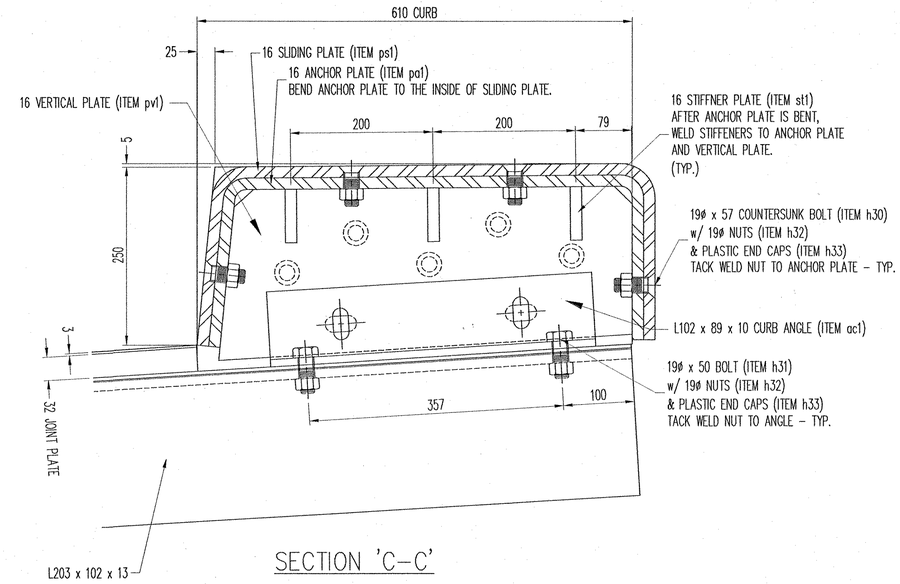

SECTION 'C–C'

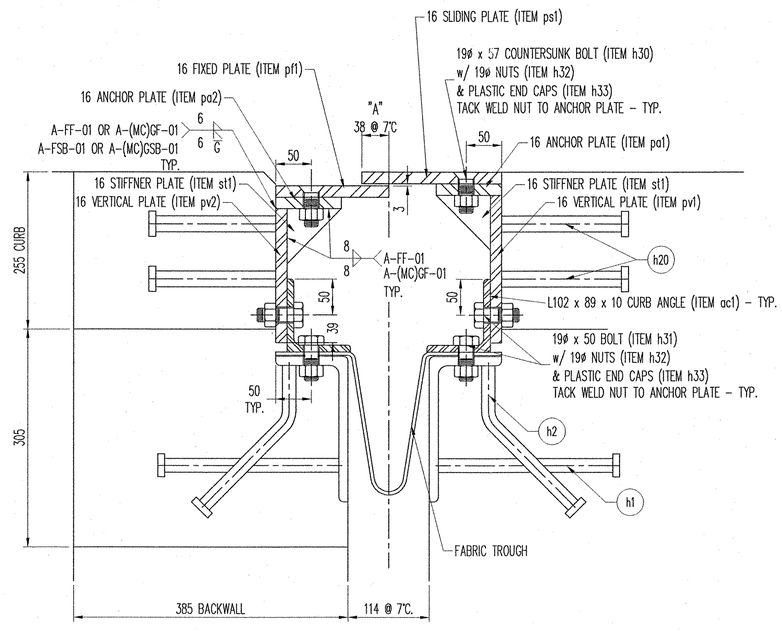

SECTION 'A–A'

☐ Reviewed
☐ Rejected

☐ Furnish as Corrected
☑ Revise and Resubmit
☐ Submit Specified Item

This review is only for general conformance with the design concept and the information given in the Contract Documents. Corrections or comments made on the shop drawings during this review do not relieve the contractor from compliance with the requirements of the plans and specifications. Review of a specific item shall not include review of an assembly of which the item is a component. The Contractor is responsible for dimensions to be confirmed and correlated at the jobsite; information that pertains solely to the fabrication process or to the means, methods, techniques, sequences and procedures of construction; coordination of the Work with that of all other trades and performing all Work in a safe and satisfactory manner.

McFarland-Johnson, Inc.
Date 1/16/06
By RWR

REV.	DESCRIPTION	DATE	DET.	CKD.

D.S. BROWN
300 E. CHERRY STREET
NORTH BALTIMORE, OHIO 45872
419.257.3561
FAX: 419.257.0332

4201 NOREX DRIVE
CHASKA, MINNESOTA 55318
952.368.3000
FAX: 952.448.7000

DSBROWN.COM

LOCATION — U.S. RTE. 5 OVER LULLS BROOK
BRIDGE — 60
PROJECT — BRS 0113 (22)
TOWN — HARTLAND
P.O. NO. — 2004
DESIGNER — MCFARLAND–JOHNSON, INC.
CUSTOMER — MILLER CONSTRUCTION

RECEIVED DEC 19 2005
CKD BY JTR
RESUBMIT BY TMS
APPROVED ✓
DATE 1/24/06

ITEM	QUANTITY

DESCRIPTION: COVER PLATE DETAILS
WINDSOR COUNTY, VERMONT

SCALE:	DRAWN BY:	CHECKED BY:	DATE:	SHEET
N.T.S.	T.BOWERS	T.JOHNSON	10–7–05	3 OF 4

PROJECT NUMBER	PRODUCT CODE	RELEASE	SHEET
14032	1042		4

147 SCNP