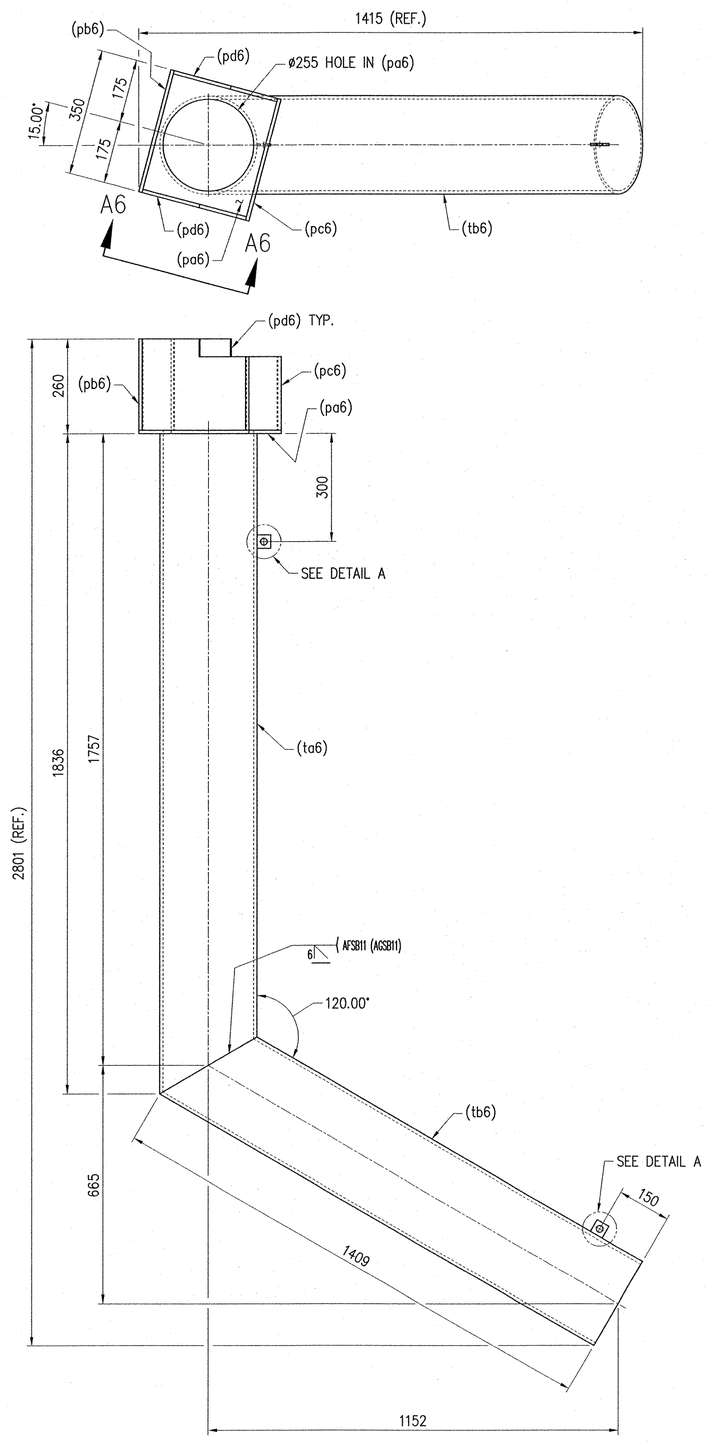

1 – EXPANSION JOINT DOWNSPOUT – 6A

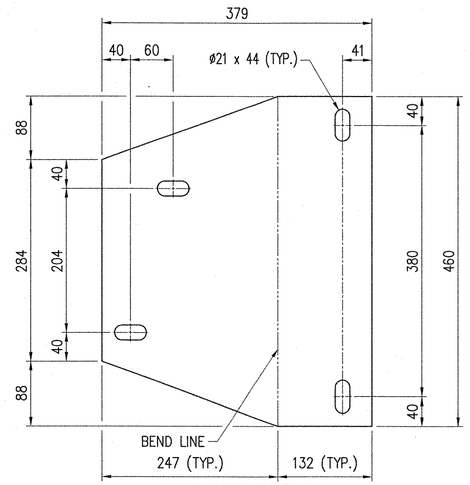

DEVELOPED DETAIL

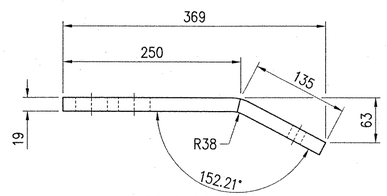

BEND DETAIL

1 – SUPPORT PLATE – 6B

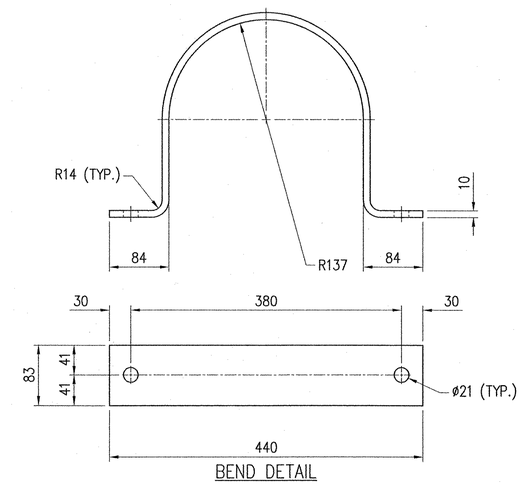

BEND DETAIL

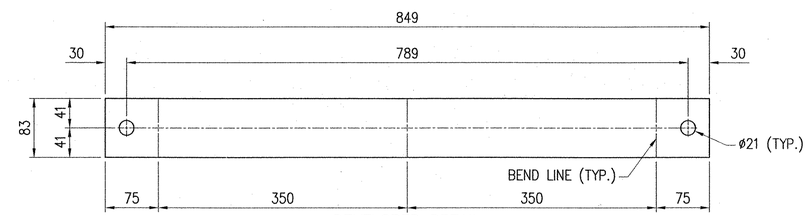

DEVELOPED DETAIL

3 – HANGER CLAMPS – 6C

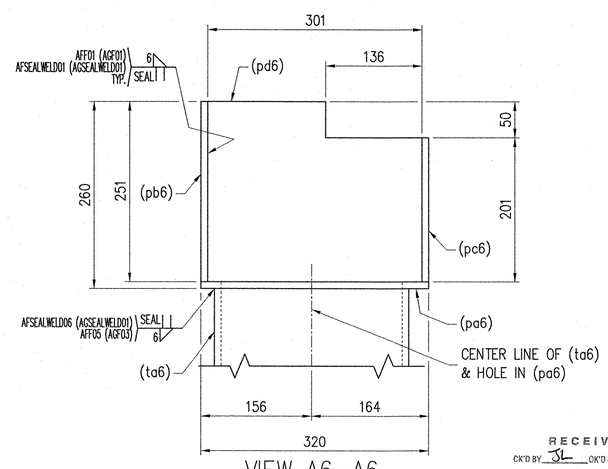

VIEW A6–A6
(ROTATED)
(SCALE: 2X)

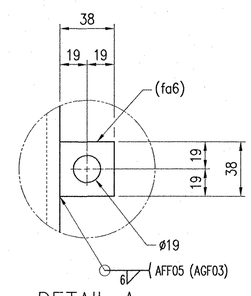

DETAIL A
(TYP. @ ALL LOCATIONS)
(SCALE: 4X)

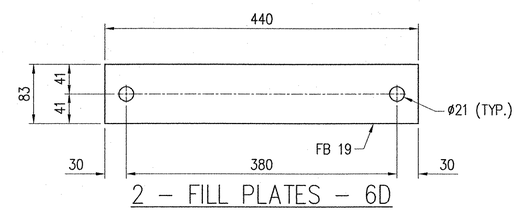

2 – FILL PLATES – 6D

SEE SHEET NO. 7 FOR DRAINAGE NOTES AND BILL OF MATERIALS.

REV.	DESCRIPTION	DATE	DET.	CKD.

RECEIVED
CK'D BY SL CK'D BY
JUN 2 6 2006
RESUBMIT APPROVED
BY DATE 7/17/06

VTrans DD
JUN 2 6 2006
Structures Design Section

D.S. BROWN
300 E. CHERRY STREET
NORTH BALTIMORE, OHIO 45872
419.257.3561
FAX: 419.257.0332
4201 NOREX DRIVE
CHASKA, MINNESOTA 55318
952.368.3000
FAX: 952.448.7000
DSBROWN.COM

LOCATION — U.S. ROUTE 5 OVER LULLS BROOK
BRIDGE — NO. 60
PROJECT — BRS 0113 (22)
TOWN — HARTLAND
P.O. NO. — 2004
DESIGNER — McFARLAND–JOHNSON, INC.
CUSTOMER — MILLER CONSTRUCTION, INC.

ITEM	QUANTITY
–	–
–	–
–	–
–	–
–	–
–	–
–	–
–	–
–	–
–	–

DESCRIPTION:
EXPANSION JOINT DRAINAGE DETAILS
WINDSOR COUNTY, VT

SCALE:	DRAWN BY:	CHECKED BY:	DATE:	
N.T.S.	JMB	JEB	5/30/06	–
PROJECT NUMBER	PRODUCT CODE	RELEASE	SHEET	
14032	1042	2	6	

14256UP