METRIC

1. ALL DIMENSIONS ARE IN MILLIMETERS UNLESS OTHERWISE NOTED.
2. ALL WEIGHTS ARE IN KILOGRAMS.

FED. ROAD DIV. NO.	STATE	FED. AID PROJ. NO.
	VT	

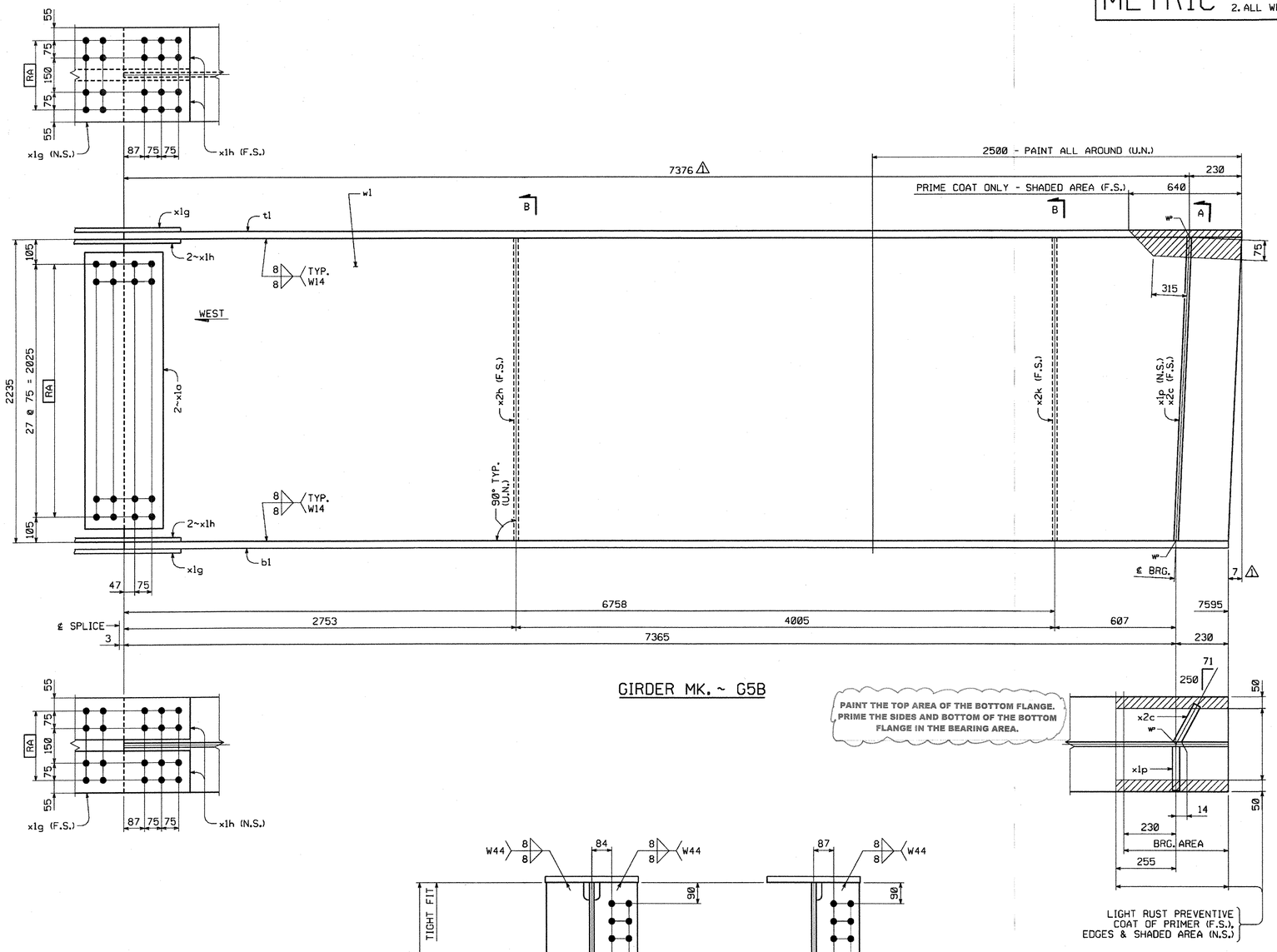

GIRDER MK. ~ G5B

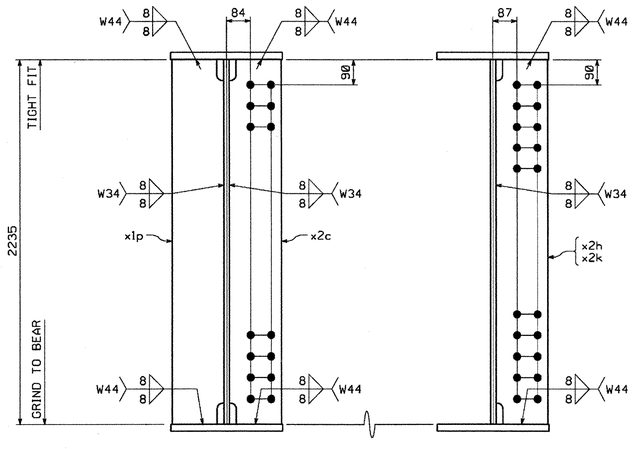

SECTION A (DEVELOPED)

SECTION B

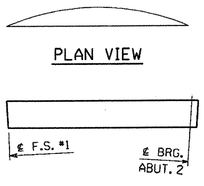

PLAN VIEW

ORIENTATION DIAGRAM

BILL OF MATERIAL

SHIP.	QTY EA.	MARK	COMM.	DESCRIPTION	LENGTH	SPEC	GRADE	TEST	REMARKS	GRP.	ITEM	SHIP WEIGHT EA.
1	1	G5B		GIRDER								4283.07
1	1	w1	PL	20 x 2235	7 606	M270M	345W	T		3	8	2668.58
1	1	t1	PL	22 x 410	7 606	M270M	345W			4	35	538.49
1	1	b1	PL	22 x 410	7 595	M270M	345W	T		4	36	537.71
1	2	x1a	PL	16 x 2125	350	M270M	345W	T		6	1	93.40
1	2	x1g	PL	14 x 410	580	M270M	345W	T		6	6	26.13
1	4	x1h	PL	14 x 180	580	M270M	345W	T		6	7	11.47
1	1	x1p	PL	22 x 190	2 235	M270M	345W			7	3	73.33
1	1	x2c	PL	22 x 190	2 235	M270M	345W			7	3	73.33
1	1	x2h	PL	16 x 190	2 235	M270M	345W			7	6	53.33
1	1	x2k	PL	16 x 190	2 235	M270M	345W			7	6	53.33

TOTAL WEIGHT THIS SHEET: 4283.07 kg

TOTAL WEIGHT FOR BID ITEM #506.55: 164383.91 kg

☑ Reviewed ☐ Furnish as Corrected
☐ Rejected ☐ Revise and Resubmit
☐ Submit Specified Item

This review is only for general conformance with the design concept and the information given in the Construction Documents. Corrections or comments made on the shop drawings during this review do not relieve the contractor from compliance with the requirements of the plans and specifications. Review of a specific item shall not include review of an assembly of which the item is a component. The Contractor is responsible for dimensions to be confirmed and correlated at the jobsite; information that pertains solely to the fabrication process or to the means, methods, techniques, sequences and procedures of construction; coordination of the Work with that of all other trades and performing all work in a safe and satisfactory manner.

McFarland-Johnson, Inc.
Date 6/2/05
By EGW

VTrans RECEIVED
CK'D BY JWK OK'D BY
JUN 03 2005
RESUBMIT ____ APPROVED ____
BY DATE

NO.	REVISION	BY	DATE
1	CAMBER DESIGN CHANGE	MGK	4-26-05

HIGH STEEL STRUCTURES, INC.
1770 Hempstead Road
Lancaster, PA 17605-0008
Phone 717/299-5211
A Division of High Industries, Inc.

GIRDER G5B
U.S. RTE. 5 (BRIDGE #60) OVER LULLS BROOK
U.S. RTE. 5 STA. 3+080.77 TO STA. 3+123.110
TOWN OF HARTLAND
WINDSOR COUNTY, VERMONT
STATE OF VERMONT, AGENCY OF TRANSPORTATION
STATE CONTRACT OR REF. NO. PROJECT NO. BRS-0113(22)
CONTRACTOR MILLER CONSTRUCTION, INC.
IN CHARGE: GLIDDEN (IH) MADE BY: KLW CHK'D. BY: WBW DATE: 4/19/05
CONTRACT NUMBER VT-05017-1 DRAWING NUMBER 15 OF 15

SHOP NOTE

HOLES: 15/16"ø (U.N.)
BOLTS: NONE
PAINT: SEE DWG. GN1
FOR GENERAL SHOP NOTES, SEE DWG. GN1.
FOR WEB CAMBER DIAGRAM, SEE DWG. WC1.
FOR HORIZ. CURVE DIAGRAM, SEE DWG. HC1.

CODE:30

PLOTTED: 4/28/2005 9:39:35 AM BY: mk-reuder

13355

05017 X2 5/12/05 5/Resubmit For Approval TO:Miller Construction, Inc.