METRIC

METRIC	1. ALL DIMENSIONS ARE IN MILLIMETERS UNLESS OTHERWISE NOTED. 2. ALL WEIGHTS ARE IN KILOGRAMS.	FED. ROAD DIV. NO.	STATE	FED. AID PROJ. NO.
			VT	

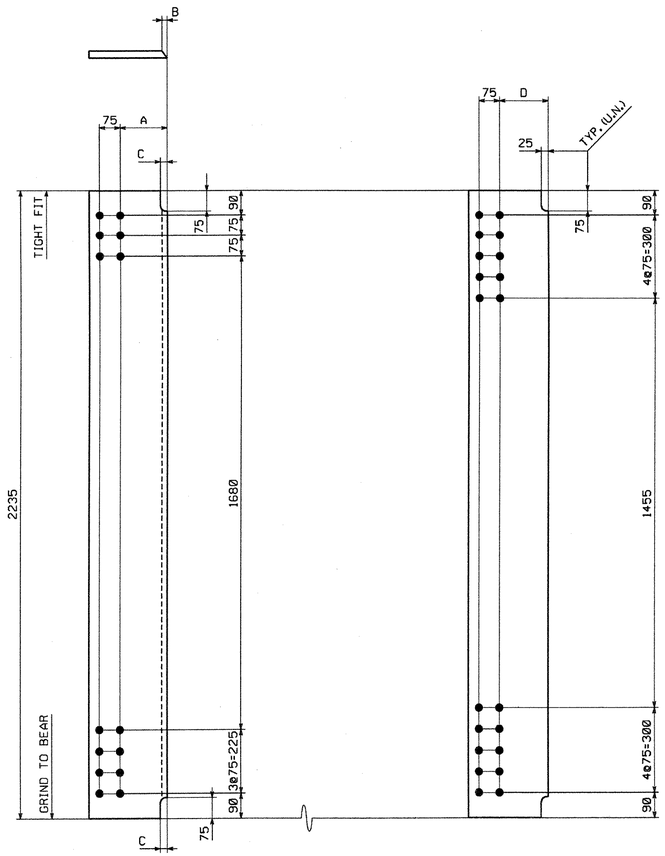

BRG. STIFF. (CG)

MARK	A	B	C
x2a	177	9	35
x2b	102	7	33
x2c	77	6	33

CONN. PL

MARK	D	REMARKS
x2d	177	--
x2f	102	--
x2g	102	(CG)
x2h	77	--
x2k	77	(CG)

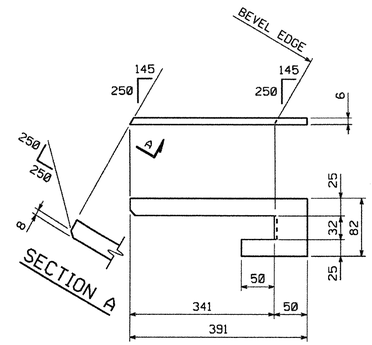

DRIP PL MK. x2m

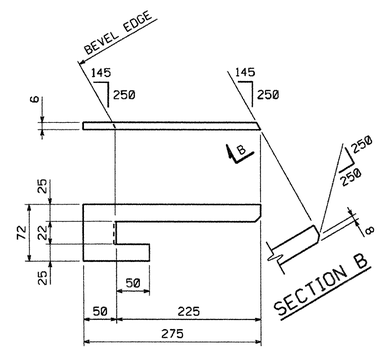

DRIP PL MK. x2n

BILL OF MATERIAL

SHIP.	QTY	MARK	COMMODITY	DESCRIPTION	LENGTH	SPEC	GRADE	TEST	REMARKS	GRP.	ITEM	WEIGHT EA. (KG)
1	3	x2a	PL	32 x 290	2 235	M270M	345W			7	1	162.80
1	2	x2b	PL	25 x 215	2 235	M270M	345W			7	2	94.29
1	3	x2c	PL	22 x 190	2 235	M270M	345W			7	3	73.33
1	30	x2d	PL	16 x 290	2 235	M270M	345W			7	4	81.40
1	18	x2f	PL	16 x 215	2 235	M270M	345W			7	5	60.35
1	2	x2g	PL	16 x 215	2 235	M270M	345W			7	5	60.35
1	27	x2h	PL	16 x 190	2 235	M270M	345W			7	6	53.33
1	3	x2k	PL	16 x 190	2 235	M270M	345W			7	6	53.33
1	1	x2m	PL	6 x 82	391	M270M	345W			7	7	1.51
1	1	x2n	PL	6 x 72	275	M270M	345W			7	7	0.93

☑ Reviewed
☐ Rejected
☐ Furnish as Corrected
☐ Revise and Resubmit
☐ Submit Specified Item

This review is only for general conformance with the design concept and the information given in the Construction Documents. Corrections or comments made on the shop drawings during this review do not relieve the contractor from compliance with the requirements of the plans and specifications. Review of a specific item shall not include review of an assembly of which the item is a component. The Contractor is responsible for dimensions to be confirmed and correlated at the jobsite; information that pertains solely to the fabrication process or to the means, methods, techniques, sequences and procedures of construction; coordination of the Work with that of all other trades and performing all work in a safe and satisfactory manner.

McFarland-Johnson, Inc.
Date 6/21/05
By EEW

VT Vermont
RECEIVED
CK'D BY JWC OK'D BY
JUN 21 2005
RESUBMIT APPROVED
BY DATE

NOTE: (CG) INDICATES CORNER GRINDING IS REQUIRED. CORNER GRINDING IS NOT REQUIRED FOR MATERIAL ON THIS DRAWING UNLESS NOTED (CG).

SHOP NOTE

HOLES: 15/16"ø
BOLTS: NONE
PAINT: NONE
FOR GENERAL SHOP NOTES, SEE DWG. GN1.

NO.	REVISION	BY	DATE
△			
△			
△			

HIGH STEEL STRUCTURES, INC.
1770 Hempstead Road
Lancaster, PA 17605-0008
Phone 717/299-5211
A Division of High Industries, Inc.

GIRDER JOB STANDARDS
U.S. RTE. 5 (BRIDGE #60) OVER LULLS BROOK
U.S. RTE. 5 STA. 3+080.77 TO STA. 3+123.110
TOWN OF HARTLAND
WINDSOR COUNTY, VERMONT
STATE OF VERMONT, AGENCY OF TRANSPORTATION

STATE CONTRACT OR REF. NO. PROJECT NO. BRS-0113(22)
CONTRACTOR MILLER CONSTRUCTION, INC.
IN CHARGE: GLIDDEN (IH) MADE BY: MGK CHK'D. BY: RC DATE: 4-13-05
CONTRACT NUMBER: VT-05017-1 DRAWING NUMBER: X2 OF X2

CODE: 30

11755

PLOTTED: 4/20/2005 6:44:53 AM BY: mkreidel

60

05017 X3 6/17/05 6/17/05For Your Use TO:Vermont Agency Of