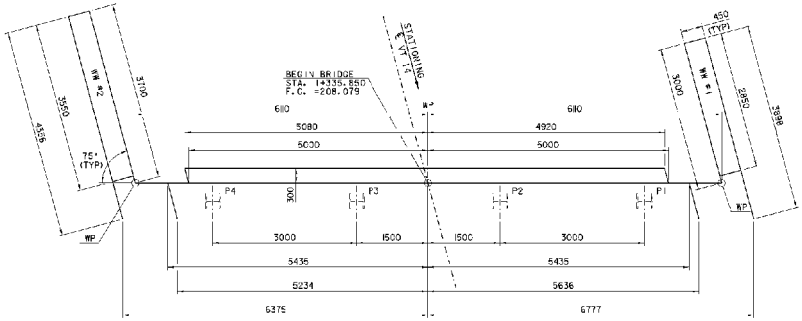

ABUTMENT #1 PLAN

SCALE = 1:40

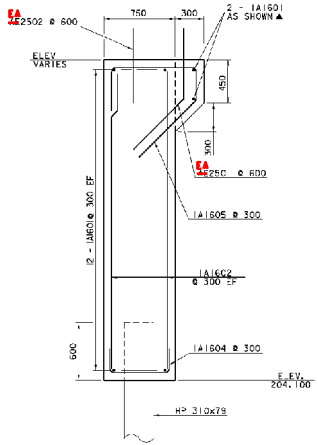

ABUTMENT # 1 TYPICAL SECTION
(ABUTMENT #2 SIMILAR)

SCALE = 1:20

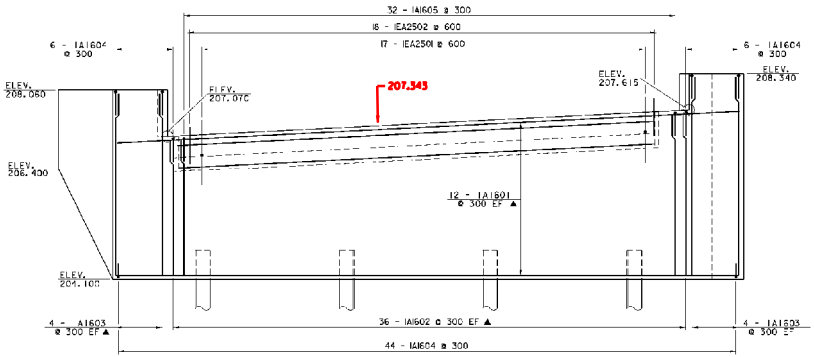

ABUTMENT #1 REINFORCING ELEVATION

SCALE = 1:40

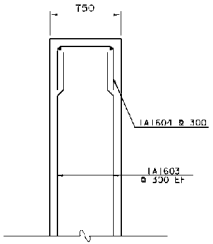

ABUTMENT # 1 CORNER
(ABUTMENT #2 SIMILAR)

SCALE = 1:20

NOTE:

NF = NEAR FACE
FF = FAR FACE
EF = EACH FACE
▲ = CUT TO FIT IN FIELD
RO OF FAR, UNLESS OTHERWISE SPECIFIED ON THE PLANS.
GSQ BAR LAP UNLESS OTHERWISE SPECIFIED ON THE PLANS.

0 1 2
SCALE = 1:20

0 1 2 3 4
SCALE = 1:40

ABUTMENT #1 DETAILS

PROJECT NAME: EAST MONTPELIER	
PROJECT NUMBER: STP 037-2(9)	
FILE NAME: T8F200\6-F\6F200abu.dgn	PLOT DATE: 16-JUL-2009
PROJECT LEADER: K. HIGGINS	DRAWN BY: K. PELLETT
DESIGNED BY: J. LACROIX	CHECKED BY: G. LaROCHE
st200abu.t	SHEET 35 OF 67