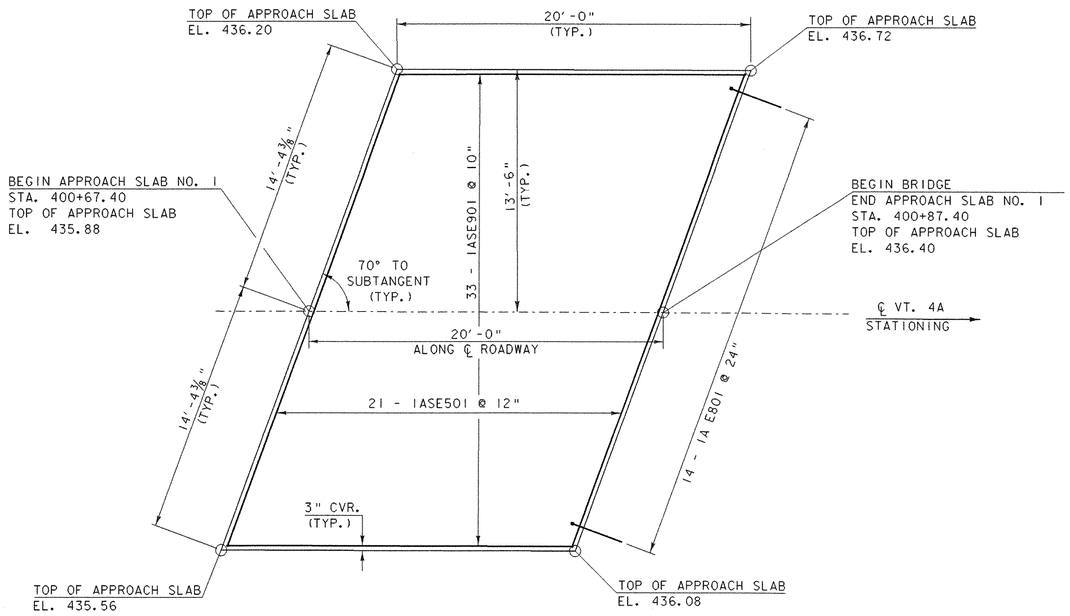

APPROACH SLAB NO. 1 PLAN

SCALE 1/4" = 1'-0

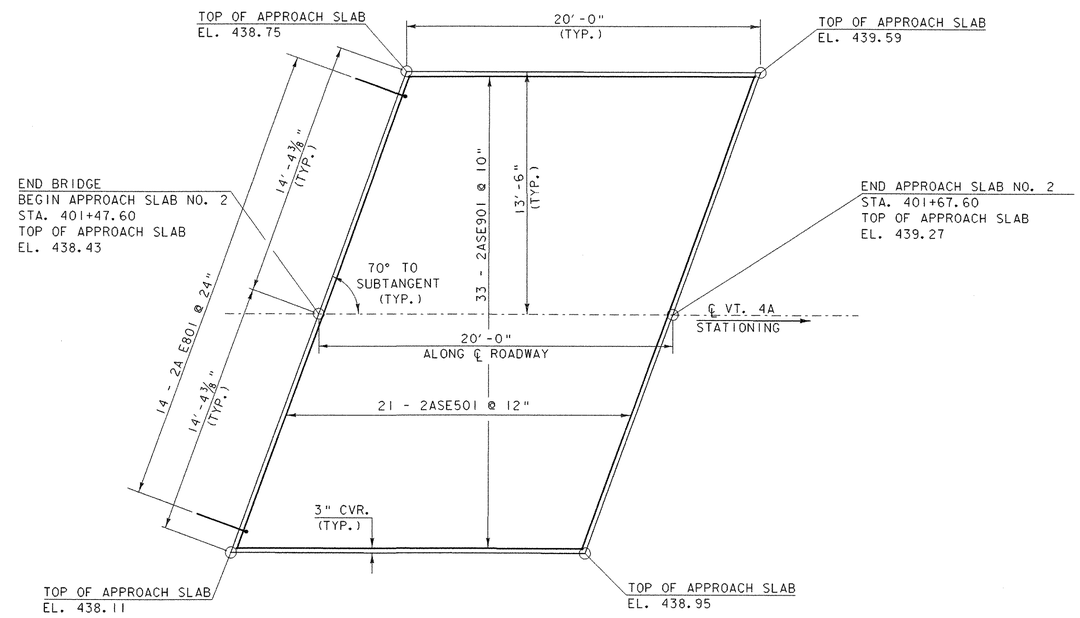

APPROACH SLAB NO. 2 PLAN

SCALE 1/4" = 1'-0

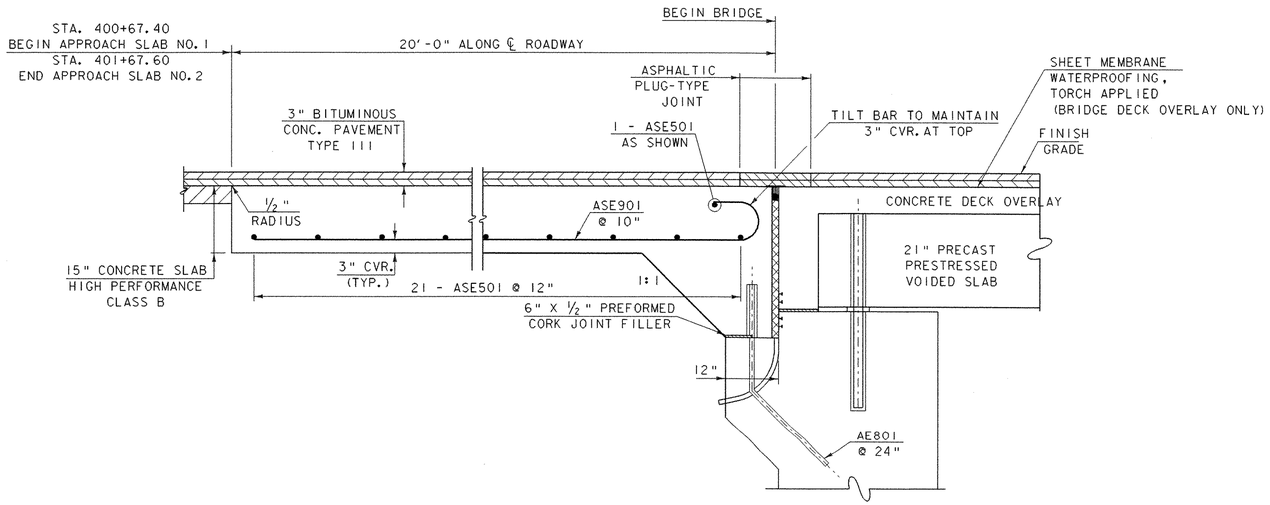

APPROACH SLAB NO. 1 DETAIL
(NORMAL TO ℄)

(APPROACH SLAB NO. 2 SIMILAR)

SCALE 1" = 1'-0

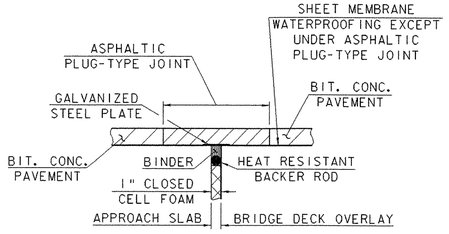

ASPHALTIC PLUG-TYPE JOINT DETAIL

NTS

SUPERSTRUCTURE DETAILS
APPROACH SLAB DETAILS

PROJECT NAME: CASTLETON	
PROJECT NUMBER: RS 0142(10)	
FILE NAME: 78f193/str/sf293sup.dgn	PLOT DATE: 09-FEB-2007
PROJECT LEADER: R. WHITCOMB	DRAWN BY: STR 3
DESIGNED BY: M. HALE	CHECKED BY: C. CARLSON
/78f193/str/sf193as.i	SHEET 47 OF 68