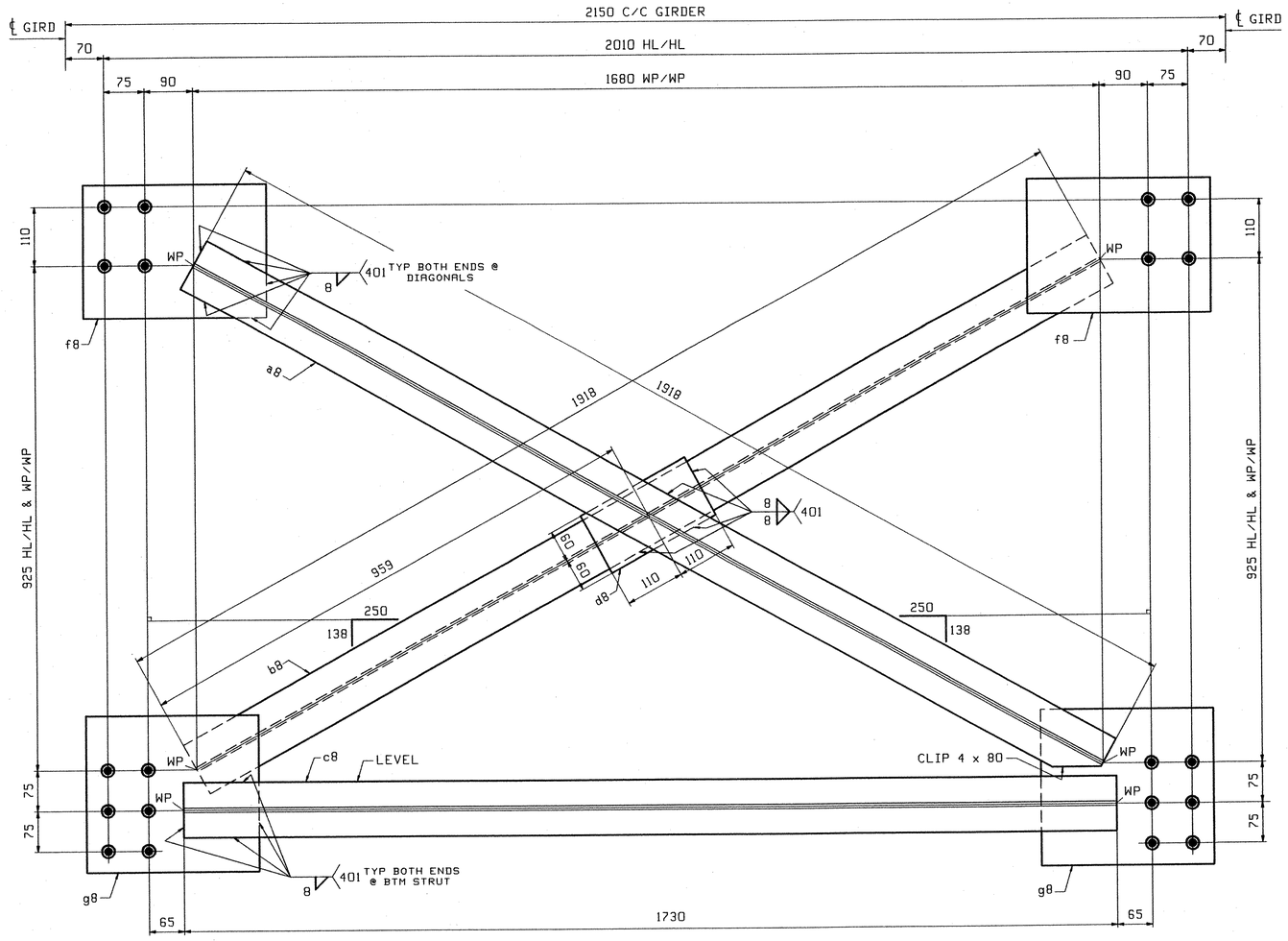

20 ~ INTERMEDIATE CROSSFRAMES ~ 8CF1

(LOOKING UP STATION)

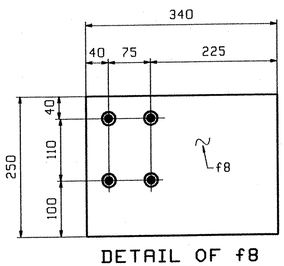

DETAIL OF f8

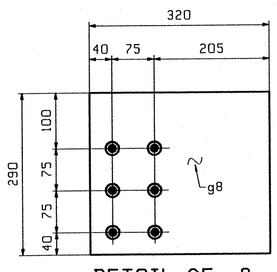

DETAIL OF g8

ABM INFO		SHIP	BILL OF MATERIAL					JOB NO.	DRAWING NO.	REV.
									8	
PAGE	LINE	MARK	QTY	MARK	MATERIAL	LENGTH m	LENGTH mm	REMARKS	WT	PROCUREMENT NOTES
		8CF1	20		INT.CROSSFRAMES				100 kg 220 lbs	
2	P		20	a8	WT 100x11	1	918	(M270M-345W)		
2	P		20	b8	WT 100x11	1	918	(M270M-345W)		
2	N		20	c8	WT 100x11	1	730	(M270M-345W)		
2	S		20	d8	PL 13x120	0	220	(M270M-345W)		
2	Q		40	f8	PL 13x250	0	340	(M270M-345W)		
2	R		40	g8	PL 13x290	0	320	(M270M-345W)		

NOTES:

FOR GENERAL NOTES & WELD PROCEDURES SEE DRAWING GN1.

REV.	REMARKS	DATE	DWN	CHK	APP	Q.A.	NO.	DIA.	LGT	TYPE	WASHER
	OUT FOR APPROVAL	9-2-04									
	OUT FOR APPROVAL										
	ISSUED TO SHOP										
	FIELD & OFFICE										

MATERIAL:	ELECTRODES:	HOLES:	SHOP BOLTS:
M270M-345W		15/16" Ø U.N.	NONE

SURFACE PREP. & PAINT:

STEEL WITHIN 2450 OF ABUTMENT 2 SHALL BE PAINTED PER NOTES ON GN1.

ALL OTHER STEEL SHALL BE UNPAINTED.

DESCRIPTION: INT. CROSSFRAMES

JOB: VT. ROUTE 118 OVER TROUT RIVER
TOWN OF BERKSHIRE, VT
FRANKLIN COUNTY

TENSOR 225

PROJ NO. BRF-RS 0283(7)

CUSTOMER: A.L. ST. ONGE

	DRAWN BY	DATE
	AB	07/29
	CHKD BY	
	PCP	08/02/04
	APPROV BY	
	SUPERVISOR	W. J. GATTI
	Q.A.	

CASCO BAY STEEL STRUCTURES, INC.
75 SPRING HILL ROAD SACO, MAINE 04072
PHONE (207) 282-7360 FAX. (207) 282-1179

JOB NO.	DRG. NO.
222	8
16235	REV. △

RECEIVED
CK'D BY JWC OK'D BY
OCT 20 2004
RESUBMIT APPROVED
BY DATE 11-01-04

☑ Reviewed ☐ Furnish as Corrected
☐ Rejected ☐ Revise and Resubmit
☐ Submit Specified Item

This review is only for general conformance with the design concept and the information given in the Construction Documents. Corrections or comments made on the shop drawings during this review do not relieve the contractor from compliance with the requirements of the plans and specifications. Review of a specific item shall not include review of an assembly of which the item is a component. The Contractor is responsible for: dimensions to be confirmed and correlated at the jobsite; information that pertains solely to the fabrication process or to the means, methods, techniques, sequences and procedures of construction; coordination of the Work with that of all other trades and performing all work in a safe and satisfactory manner.

McFarland-Johnson, Inc.
Date 10/18/04
By Steven F. Dellea

PCP Tue Aug 3 10:20:06 EDT 2004 /users/pbw/2475/8 : Rev0