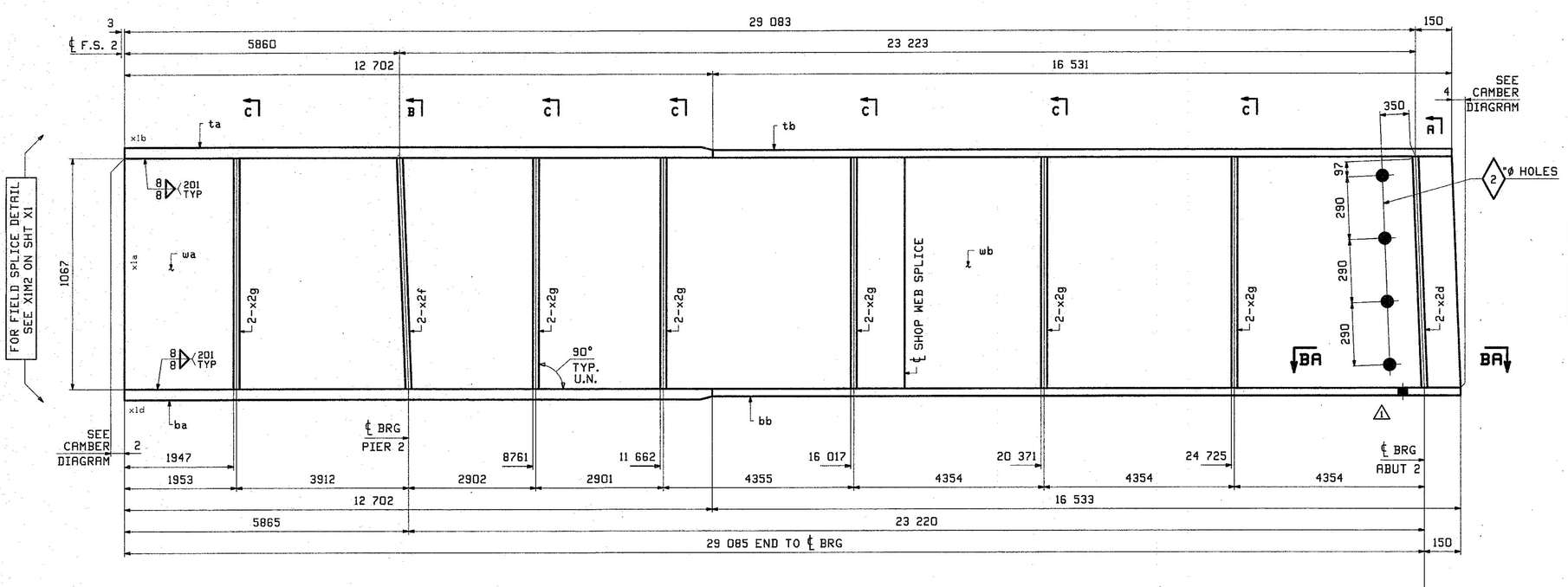

ONE - GIRDER - 10G2C

FOR GIRDER STANDARD DETAILS SEE DRAWING X2.
FOR FIELD SPLICE DETAIL SEE DRAWING X1.
FOR WEB CUTTING DIAGRAM SEE DRAWING C2.
FOR FLANGE DIAGRAM SEE DRAWING F2.
FOR GENERAL NOTES SEE DRAWING GN1.
FOR TYPICAL WELD TERMINATION DETAILS SEE DRAWING GN1.
ALL STIFFENERS ARE NORMAL TO WEB.
"T2" DENOTES MATERIAL SUBJECT TO CHARPY V-NOTCH TESTING.

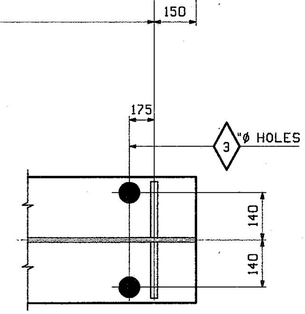

SECTION BA-BA

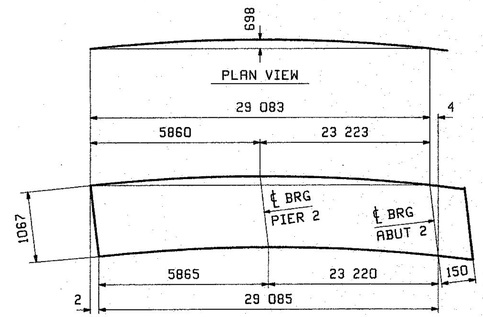

DEV. ORIENTATION DIAGRAM

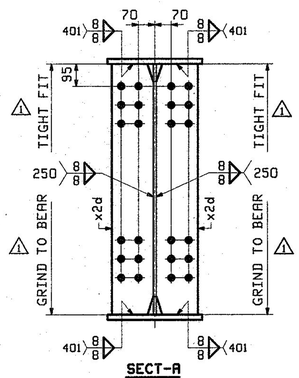

SECT-A

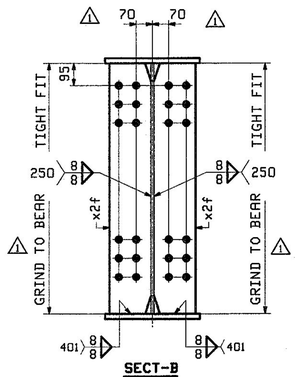

SECT-B

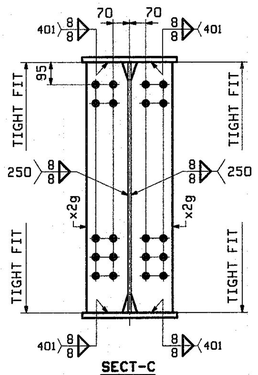

SECT-C

ABM INFO		SHIP	BILL OF MATERIAL					JOB NO.	DRAWING NO.	REV.
								524	10	1
PAGE	LINE	MARK	QTY	MARK	MATERIAL	LENGTH m	LENGTH mm	REMARKS	WT	PROCUREMENT NOTES
		10G2C	1		GIRDER				8417 kg 18556 lbs	
3	S		1	wa	PL 13x1067	19	150	M270M-345WT2	1976 kg 4357 lbs	
3	G		1	wb	PL 13x1067	11	093	M270M-345WT2	1208 kg 2663 lbs	
1	J		1	ta	PL 25x406	12	702	M270M-345WT2	1012 kg 2231 lbs	
2	E		1	tb	PL 22x406	16	531	M270M-345WT2	1159 kg 2555 lbs	
1	C		1	ba	PL 38x406	12	702	M270M-345WT2	1518 kg 3351 lbs	
2	E		1	bb	PL 22x406	16	533	M270M-345WT2	1159 kg 2556 lbs	
5	B		2	x2d	PL 22x178	1	067	MIE M270M-345WT2	33 kg 72 lbs	
5	B		2	x2f	PL 22x178	1	067	MIE M270M-345WT2	33 kg 72 lbs	
5	C		12	x2g	PL 13x178	1	067	M270M-345WT2	19 kg 43 lbs	

REV.	DATE	REMARKS	DWN	CHK	APVL	SHOP
1	12/18	APPROVAL COMMENTS	CRK	PCP	12/19/12	
0						

MATERIAL:	SURFACE PREP. & PRINT:	HOLES:	SHOP BOLTS:
M270M-345W UN	SEE GN1	15/16"ø UN	NONE

DESCRIPTION: GIRDER 10G2C

CASCO BAY STEEL STRUCTURES, INC.
1 WALLACE AVE. PHONE (207) 780-6722
SOUTH PORTLAND, ME 04106 FAX. (207) 780-6726
TENSOR 3146

STRUCTURE: VT ROUTE 108, BRIDGE #21
MAJOR COLLECTOR
TOWN OF CAMBRIDGE
COUNTY OF LAMOILLE, VERMONT

DRAWN:	CRK	DATE:	10/09
CHKD:	PCP	DATE:	10/16
LOCATION:	CAMBRIDGE, VERMONT	JOB NO.	DWG NO.
PROJ NO.	BRF 027-1(4)	524	10
CUSTOMER:	A. L. ST. ONGE CONTRACTING		REV. 1

VTRANS RECEIVED OKAY TO ... DEC 13 2012 RESUBMIT BY ... APPROVED DATE 01/08/13