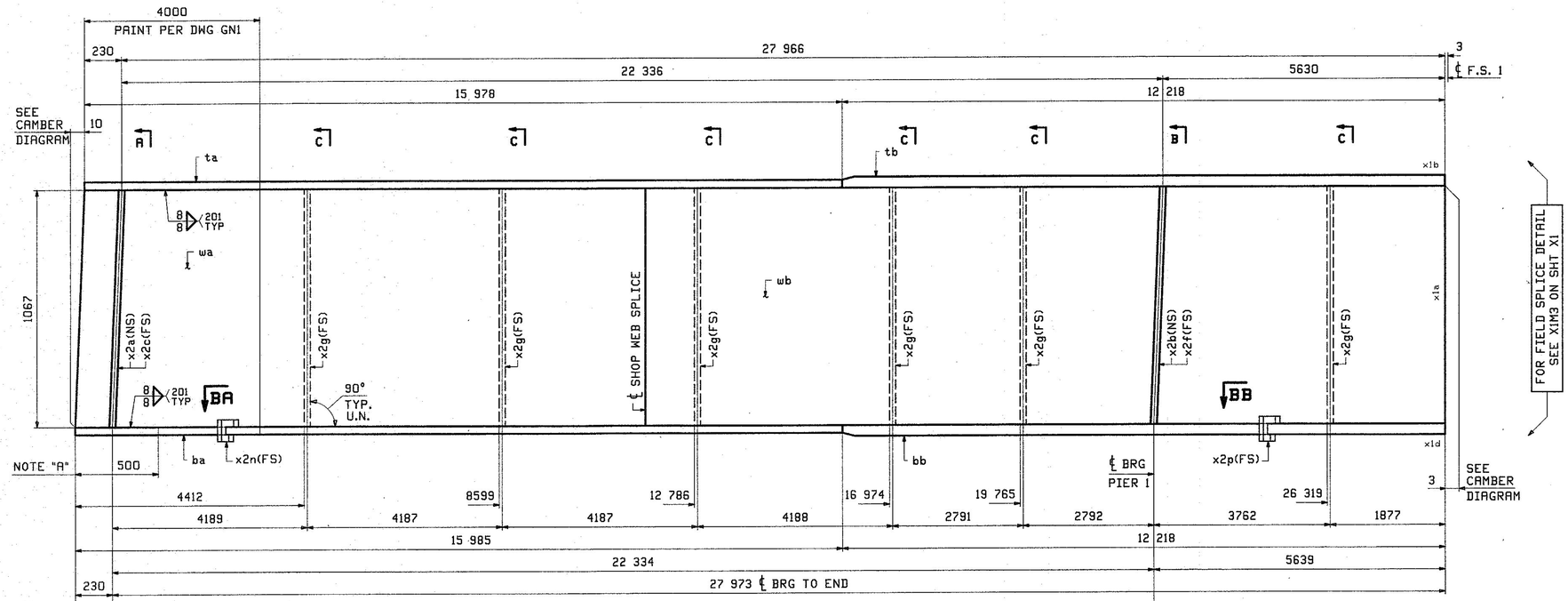

ABM INFO		SHIP	BILL OF MATERIAL					JOB NO.	DRAWING NO.	REV.
								524	4	1
PAGE	LINE	MARK	QTY	MARK	MATERIAL	LENGTH m	LENGTH mm	REMARKS	WT	PROCUREMENT NOTES
		4G4A	1		GIRDER				7393 kg 16298 lbs	
3	N		1	wa	PL 13x1067	10	060	M270M-345WT2	1095 kg 2415 lbs	
3	S		1	wb	PL 13x1067	18	151	M270M-345WT2	1976 kg 4357 lbs	
2	L		1	ta	PL 22x406	15	978	M270M-345WT2	1120 kg 2470 lbs	
2	O		1	tb	PL 22x406	12	218	M270M-345WT2	857 kg 1889 lbs	
2	L		1	ba	PL 22x406	15	985	M270M-345WT2	1121 kg 2471 lbs	
1	N		1	bb	PL 25x406	12	218	M270M-345WT2	974 kg 2146 lbs	
5	B		1	x2a	PL 22x178	1	067	MIE M270M-345WT2	33 kg 72 lbs	
5	B		1	x2b	PL 22x178	1	067	MIE M270M-345WT2	33 kg 72 lbs	
5	B		1	x2c	PL 22x178	1	067	MIE M270M-345WT2	33 kg 72 lbs	
5	B		1	x2f	PL 22x178	1	067	MIE M270M-345WT2	33 kg 72 lbs	
5	C		6	x2g	PL 13x178	1	067	M270M-345WT2	19 kg 43 lbs	
5	D		1	x2n	PL 6x72	0	285		**** kg .00 lbs	
5	D		1	x2p	PL 6x75	0	285		1 kg 2 lbs	

ONE - GIRDER - 4G4A

FOR GIRDER STANDARD DETAILS SEE DRAWING X2.
FOR FIELD SPLICE DETAIL SEE DRAWING X1.
FOR WEB CUTTING DIAGRAM SEE DRAWING C1.
FOR FLANGE DIAGRAM SEE DRAWING F1.
FOR GENERAL NOTES SEE DRAWING GN1.
FOR TYPICAL WELD TERMINATION DETAILS SEE DRAWING GN1.
ALL STIFFENERS ARE NORMAL TO WEB.
"T2" DENOTES MATERIAL SUBJECT TO CHARPY V-NOTCH TESTING.

NOTE "A"
BEARING AREA TO RECEIVE FIELD WELDED SOLE PLATE.
△1 PRIMER ONLY BTM & EDGES OF BTM FLG.

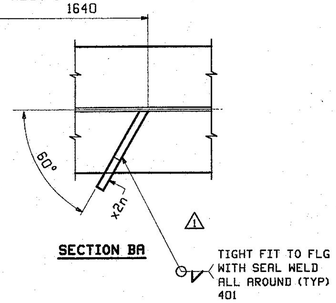

SECTION BA

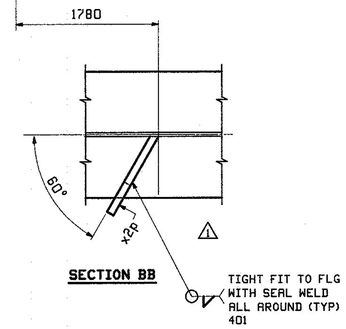

SECTION BB

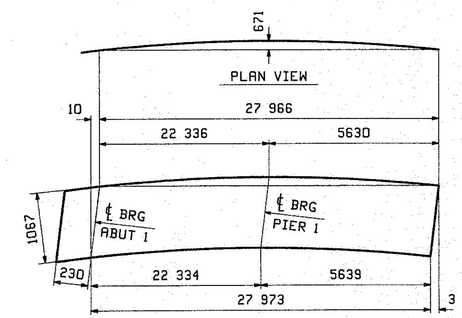

DEV. ORIENTATION DIAGRAM

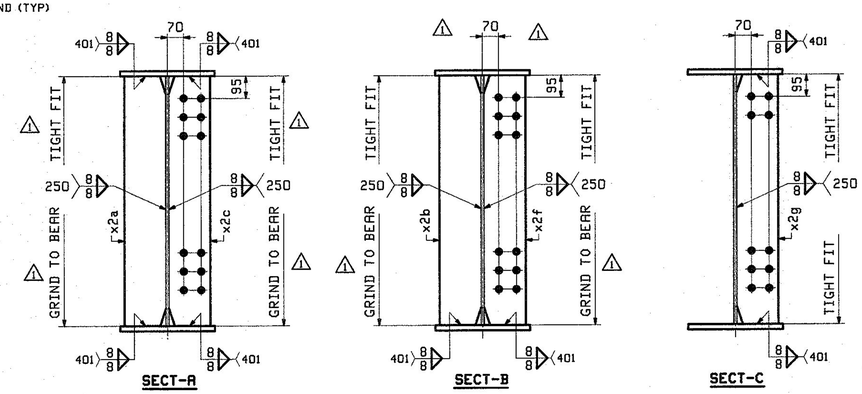

SECT-A SECT-B SECT-C

REV.	DATE	REMARKS	DWN	CHK	APVL	SHOP
△1	12/18	APPROVAL COMMENTS	CRK	PCP	12/19/12	
0						

MATERIAL: M270M-345W UN
SURFACE PREP. & PAINT: SEE GN1
HOLES: 15/16"Ø
SHOP BOLTS: NONE
DESCRIPTION: GIRDER 4G4A

CASCO BAY STEEL STRUCTURES, INC.
1 WALLACE AVE. PHONE (207) 780-6722
SOUTH PORTLAND, ME 04106 FAX. (207) 780-6726
TENSOR 3146

STRUCTURE: VT ROUTE 108, BRIDGE #21
MAJOR COLLECTOR
TOWN OF CAMBRIDGE
COUNTY OF LAMOILLE, VERMONT

DRAWN: CRK DATE: 10/08
CHKD: PCP DATE: 10/16

LOCATION: CAMBRIDGE, VERMONT
PROJ NO. BRF D27-1(4)
CUSTOMER: A. L. ST. ONGE CONTRACTING

JOB NO. 524
DWG NO. 4
REV. △1

DRAWINGS RECEIVED DEC 28 2012
FIELDWORK BY ____ APPROVED BY ____ DATE 01/09/13

PCP Wed, Dec 19, 2012 10:32:38 PM /users/pcp/4G4A.1.dwg