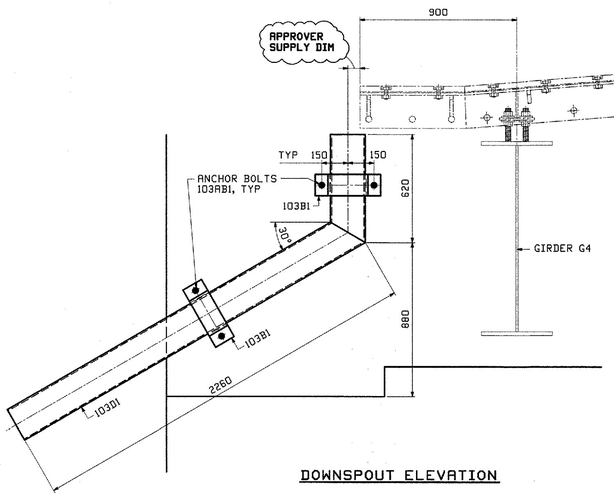

DOWNSPOUT ELEVATION

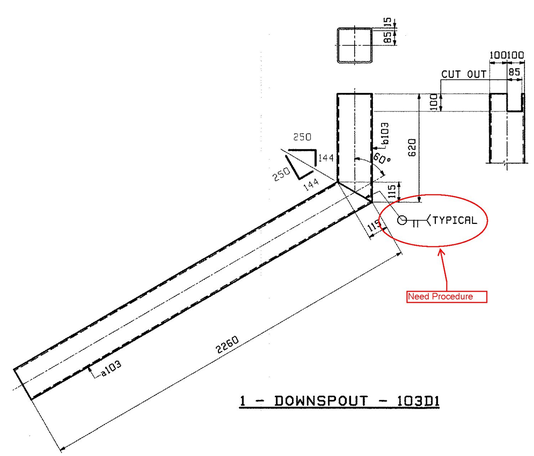

1 - DOWNSPOUT - 103D1

ABM INFO		SHIP		BILL OF MATERIAL					JOB NO. 524	DRAWING NO. 103	REV.
PAGE	LINE	MARK	QTY	MARK	MATERIAL	LENGTH in	LENGTH mm		REMARKS	WT	PROCUREMENT NOTES
		103D1	1		DOWNSPOUT					111 kg 244 lbs	
8	B		1	a103	HSS 200x200x7	2	260		GALV 090	87 kg 191 lbs	
8	C		1	e103	HSS 200x200x7	0	620		GALV H00	24 kg 53 lbs	
		103B1	2		BARS					7 kg 15 lbs	
8	D		2	c103	PL 10x100	0	786		BAR, GALV BENT NROM-250	5 kg 14 lbs	
					ANCHOR BOLTS						
8	E		4	103AB1	M20 190	0	230		ANCHOR BOLT 090	.51 kg 1.2 lbs	
8	F		4		190 HHN				GALV. GR 5H M143		
8	G		4		190 HSW				GALV. F436		

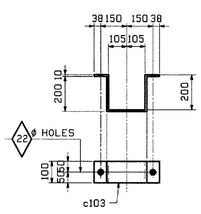

2 - BARS - 103B1

4 - ANCHOR BOLTS - 103AB1

Vermont Agency of Transportation
RECEIVED
CK'D BY J. Griffin OK'D BY M. Umberger
Apr. 3, 2013
RESUBMIT APPROVED AS NOTED ✓
BY M. Evans-Mongeon DATE 4-10-2013

REV.	DATE	REMARKS	DWN	CHK	APVL	SHOP
0					MAR 28 2013	

MATERIAL:	SURFACE PREP. & PRINT:	HOLES:	SHOP BOLTS:
M270M-250 UN	GALV	AS NOTED	AS NOTED

DESCRIPTION: DOWNSPOUT

CASCO BAY STEEL STRUCTURES, INC.
1 WALLACE AVE. PHONE (207) 780-6722
SOUTH PORTLAND, ME 04106 FAX. (207) 780-6726

STRUCTURE: VT ROUTE 108, BRIDGE #21
MAJOR COLLECTOR
TOWN OF CAMBRIDGE
COUNTY OF LAMOILLE, VERMONT

DRAWN: TJB DATE: 03/22
CHKD: DH DATE: 03/25

LOCATION: CAMBRIDGE, VERMONT
PROJ NO. BRF 027-1(4)
CUSTOMER: R. L. ST. ONGE CONTRACTING

JOB NO. 524
DWG NO. 103
REV. △