NOTES:
1. PAYMENT FOR GUARDRAIL APPROACH SECTION – GALVANIZED 2 RAIL, SHALL INCLUDE THE TERMINAL CONNECTOR, THE CONNECTION PLATE, THE DEFLECTOR PLATE, RAIL, POSTS, BLOCKS AND ATTACHMENT HARDWARE.

2. ALL APPROACH RAIL SPLICES SHALL BE LAPPED IN THE DIRECTION OF TRAFFIC FLOW.

3. TUBE AND STEEL POST MATERIALS, DIMENSION SIZES AND NOTES SHALL BE THE SAME AS THOSE OF THE BRIDGE RAIL UNLESS OTHERWISE NOTED.

4. APPROACH RAIL BOLTS SHALL BE ASTM A307 GRADE A AND NUTS SHALL BE AASHTO M291 (ASTM 563 GRADE A OR BETTER (GALVANIZED). WASHERS SHALL BE ASTM F844.

5. WELD TOP SPLICE BAR TO FIT BEND. USE COMPLETE PENETRATION WELD (B-U2).

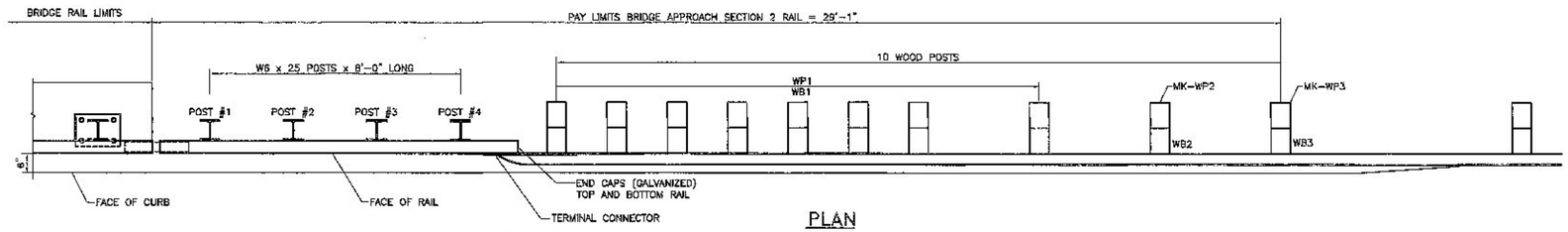

PLAN

SHOWN STRAIGHT – SEE SHEETS 1 & 2 FOR RADIUS INSTALLATION

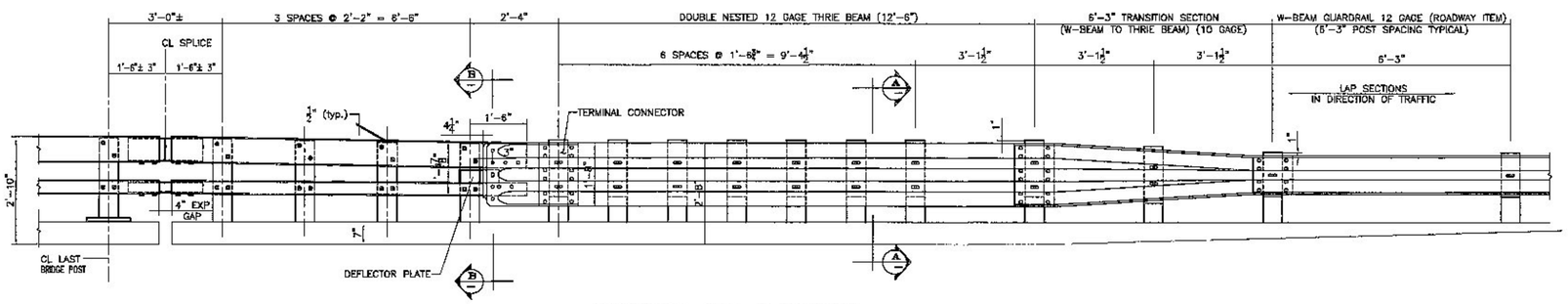

APPROACH RAIL ELEVATION

LEADING END SHOWN (RIGHT) – DEPARTURE END (LEFT) OPPOSITE HAND

QTY = 4 UNITS

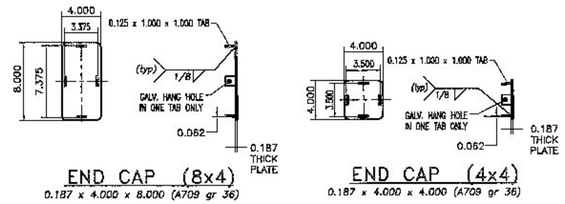

END CAP (8x4)

0.187 x 4.000 x 8.000 (A709 gr 36)

END CAP (4x4)

0.187 x 4.000 x 4.000 (A709 gr 36)

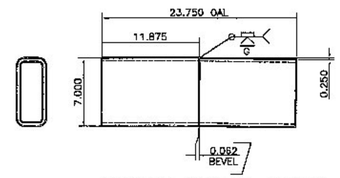

ANGLED SPLICE DETAIL

HSS 7 x 3 x 3/8 – FOR UPPER RAIL SPLICE

SEE BRIDGE RAIL SHEET FOR DETAIL ON LOWER RAIL SPLICE TUBE

BILL OF MATERIAL

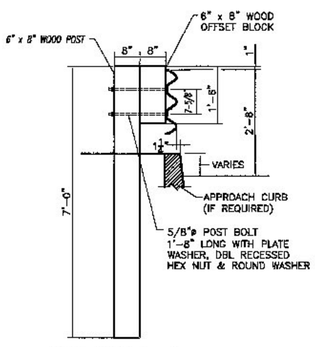

SECTION A–A

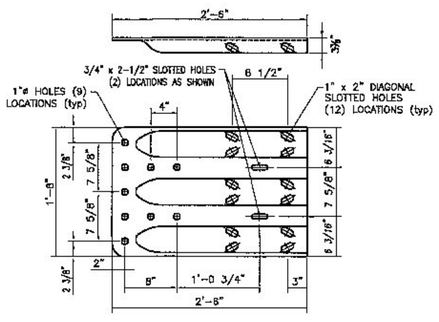

TERMINAL CONNECTOR

10 GAUGE (AASHTO M180 B2)

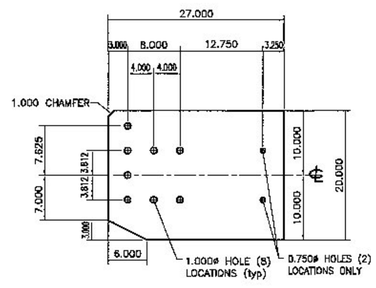

CONNECTION PLATE

0.375 x 20.000 x 27.000 (A709 gr 36)

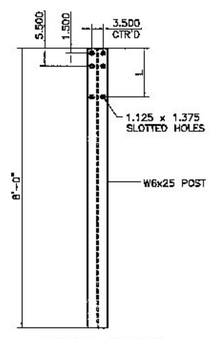

STEEL POST

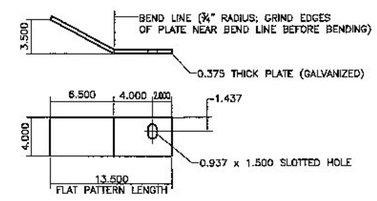

DEFLECTOR PLATE

0.375 x 4.000 x 13.500 (A709 gr 36)

RIGHT HAND APPROACH SHOWN – LEFT HAND BENT OPPOSITE

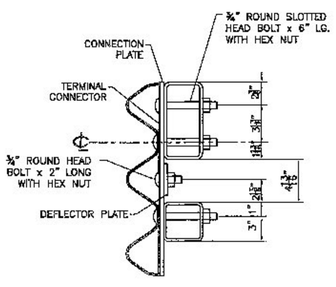

SECTION B–B

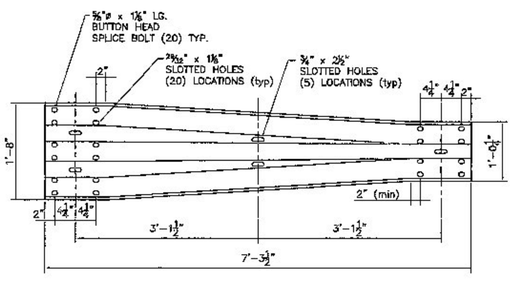

THRIE TRANSITION PANEL

10 GAUGE (AASHTO M180 B2)

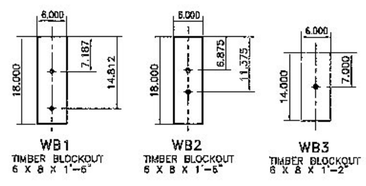

WOOD BLOCK DETAILS

STEEL POST CHART

No.	L
#1	1'-3.250"
#2	1'-3.000"
#3	1'-2.687"
#4	1'-2.375"

Vermont Agency of Transportation

RECEIVED

CK'D BY MEM OK'D BY

May 31, 2013

RESUBMIT APPROVED ✓

BY MEM DATE 5-31-2013

HIGHWAY SAFETY CORP

GLASTONBURY, CT

860-633-9445

ITEM 621.72 GUARDRAIL APPROACH, GALVANIZED 2 RAIL BOX BEAM (S-36GB)

TOWN OF CAMBRIDGE, LAMOILLE COUNTY

VT 108 BRIDGE #21 BRF 027-1(4)

GENERAL CONTRACTOR

SUB CONTRACTOR LAFAYETTE

AISC CERTIFIED FABRICATOR

HSC JOB NO. 1912

SHEET NO. 4 of 4

DRAWN PAR | CHECKED | DATE 04-24-13 | SCALE NONE | SIZE D