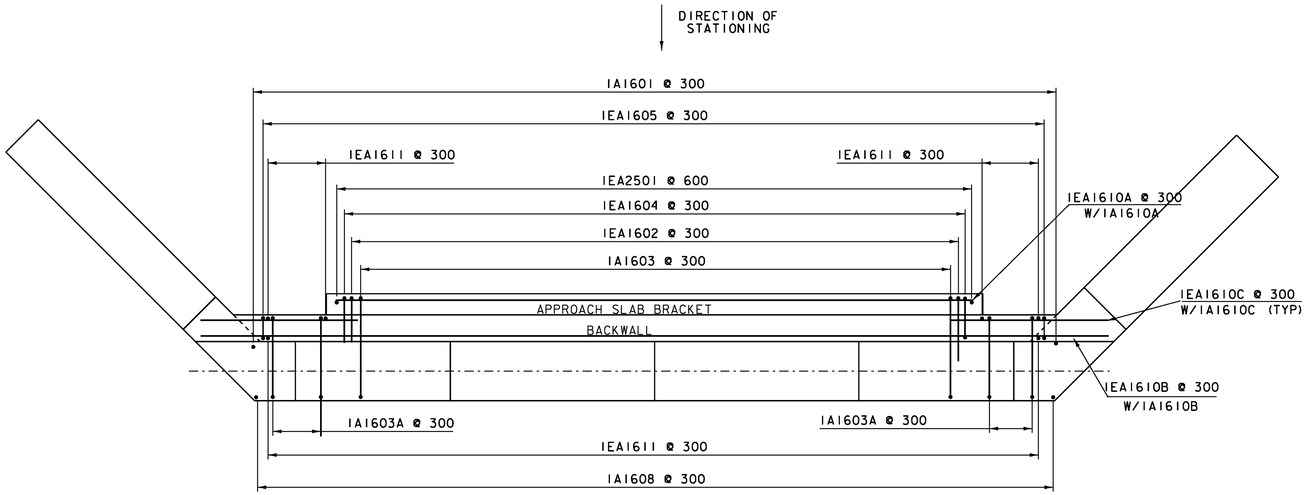

ABUTMENT #1 BACKWALL PLAN

0 1 2 3 4

SCALE = 1:40

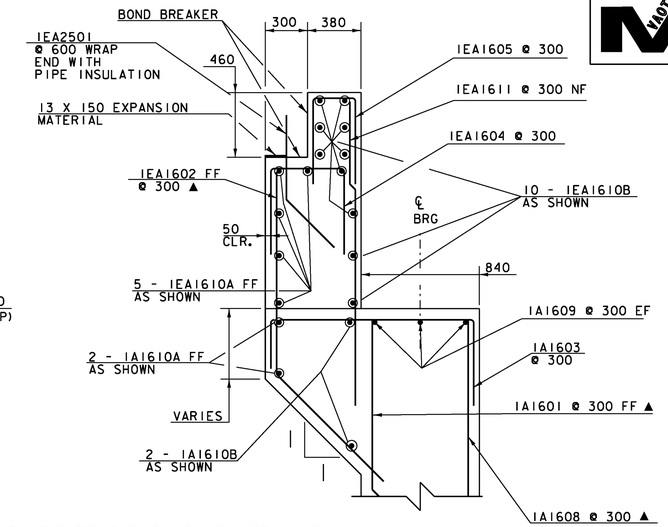

NOTE: PAYMENT FOR FURNISHING AND INSTALLING BOND BREAKER, PIPE INSULATION, AND EXPANSION MATERIAL WILL BE INCIDENTAL TO THE ADJACENT CONCRETE ITEM.

SECTION A-A BACKWALL

0 1 2

SCALE = 1:20

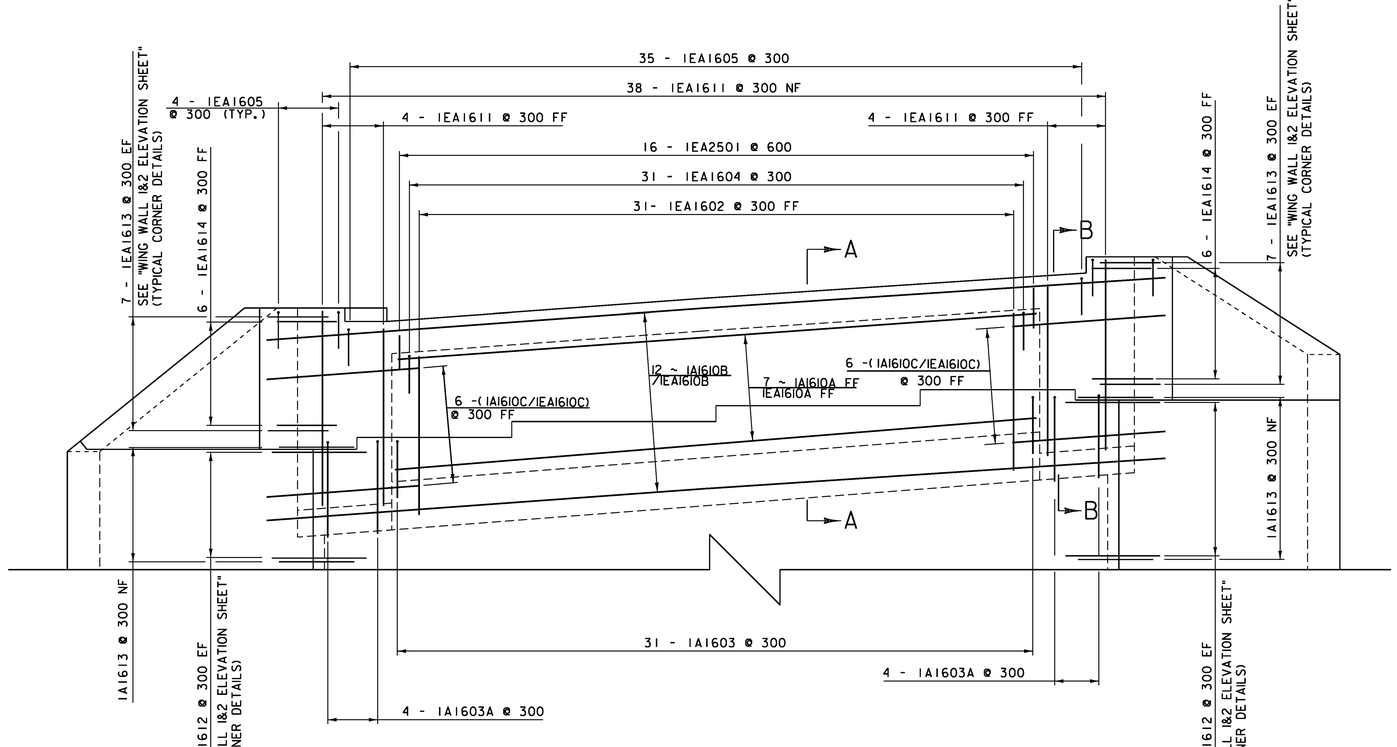

ABUTMENT #1 BACKWALL ELEVATION

0 1 2 3 4

SCALE = 1:40

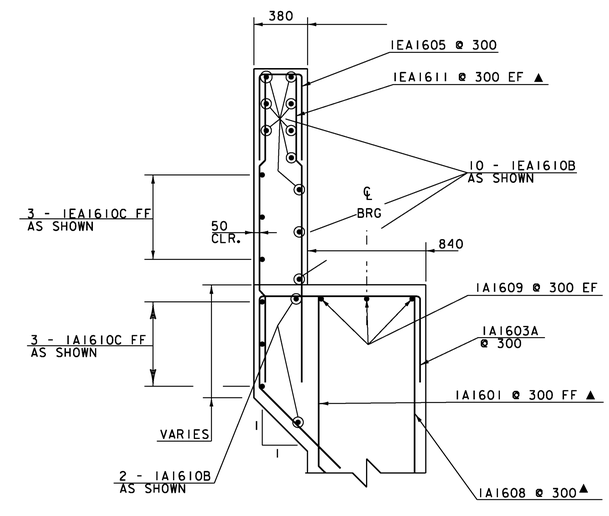

SECTION B-B BACKWALL

0 1 2

SCALE = 1:20

NOTE:

NF = NEAR FACE
FF = FAR FACE
EF = EACH FACE
▲ = CUT TO FIT IN FIELD
80 CLEAR, UNLESS OTHERWISE SPECIFIED ON THE PLANS.
660 BAR LAP UNLESS OTHERWISE SPECIFIED ON THE PLANS.

PROJECT NAME:	CAMBRIDGE		
PROJECT NUMBER:	BRF 027-1 (4)		
FILE NAME:	78f163subst.dgn	PLOT DATE:	05-JUN-2012
PROJECT LEADER:	M. EVANS-MONGEON	DRAWN BY:	R. PELLETT
DESIGNED BY:	T. FILLBACH	CHECKED BY:	T. FILLBACH
ABUTMENT #1SHEET 2		SHEET 173	OF 214