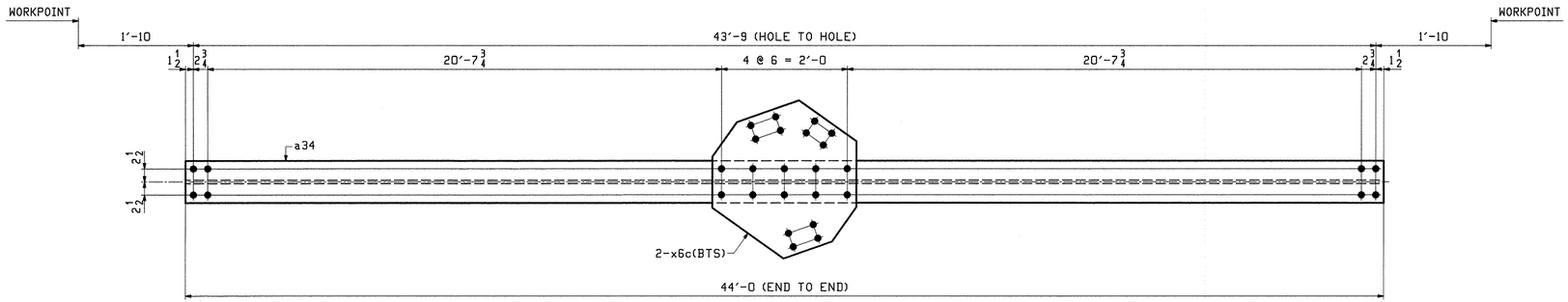

2 ~ TOP LATERAL BRACING ~ 34LB1

(U1 - U2 & U9 - U8)

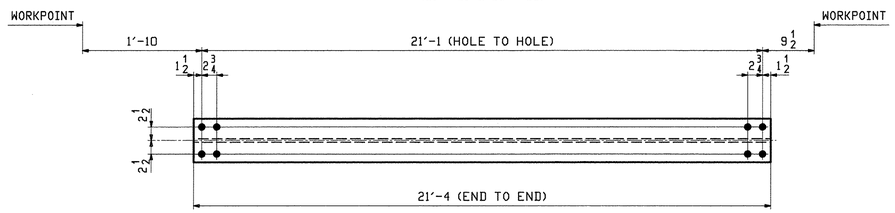

4 ~ TOP LATERAL BRACING ~ 34LB2

(U1 - U2 & U9 - U8)

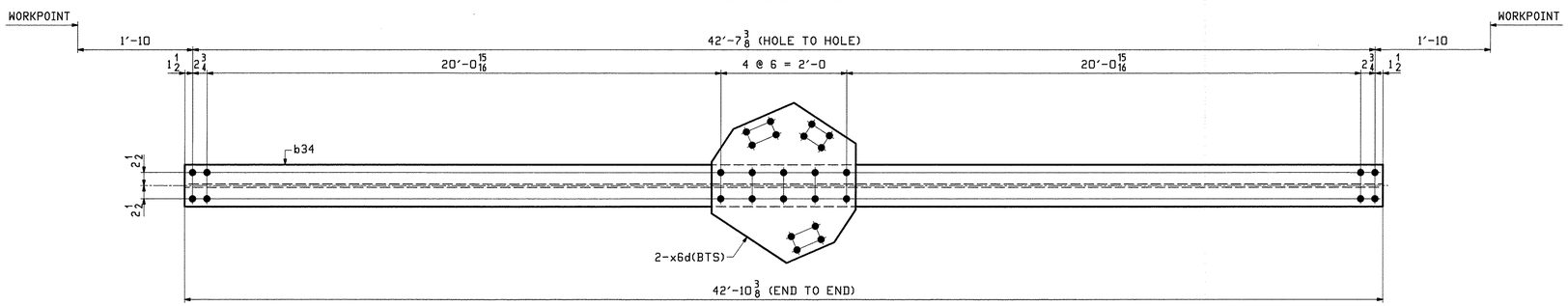

2 1 ~ TOP LATERAL BRACING ~ 34LB3

(U2 - U3 & U8 - U7)

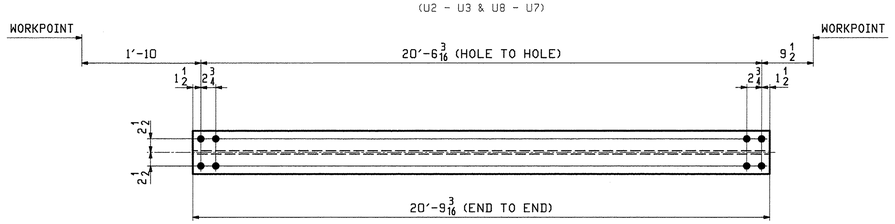

4 ~ TOP LATERAL BRACING ~ 34LB4

(U2 - U3 & U8 - U7)

ABM INFO		SHIP	BILL OF MATERIAL					JOB NO.	DRAWING NO.	REV.
								498	34	2
PAGE	LINE	MARK	QTY	MARK	MATERIAL	LENGTH FT	LENGTH INCHES	REMARKS	WT	PROCUREMENT NOTES
		34LB1	2		TOP LATERAL BRACING				2540	
7	B		2	a34	W 14x53	44	0		2332	1
7	H		4	x6c	PL 1/2x26 1/4	2	4		104	1
7	C	34LB2	4		W 14x53	21	4		1131	
		34LB3	1		TOP LATERAL BRACING				2480	
7	D		1	b34	W 14x53	42	10 3/8		2272	1
7	H		2	x6d	PL 1/2x26 1/4	2	4		104	1
7	E	34LB4	4		W 14x53	20	9 3/16		1101	

NOTES:
1. FOR GENERAL NOTES SEE SHEET GN1.
2. HOLES IN BOTH FLANGES ARE ALIKE.

REV.	DATE	REMARKS	DWN	CHK	APVL	SHOP
2	9/14/12	REV'D QTY OF 34LB3	EEO	PCP		
1	8/9/12	REVISE WEIGHTS IN B.O.M.	EEO	PCP		
0						

MATERIAL:	SURFACE PREP. & PAINT:	HOLES:	SHOP BOLTS:
M270-50 (UN)	HOT-DIP GALV.	15/16ø (UN)	NONE

DESCRIPTION: TOP LATERAL BRACING

CASCO BAY STEEL STRUCTURES, INC.
1 WALLACE AVE. PHONE (207) 780-6722
SOUTH PORTLAND, ME 04106 FAX. (207) 780-6726

TENSOR 3073

STRUCTURE: VT RTE 107 OVER WHITE RIVER	DRAWN: EEO	DATE: 11/01
	CHKD: PCP	DATE: 11/11
LOCATION: BETHEL, VT.	JOB NO.	DWG NO.
PROJ NO. BRF 022-1(14)	498	34
CUSTOMER: BECK & BELLUCCI		REV. 2