ABM INFO		SHIP	BILL OF MATERIAL					JOB NO.	DRAWING NO.	REV.
								498	45	
PAGE	LINE	MARK	QTY	MARK	MATERIAL	LENGTH FT	LENGTH INCHES	REMARKS	WT	PROCUREMENT NOTES
		45U3U2E	1		TOP CHORD SHIPPING ASS'Y				6804	
			1	12TC3E	TOP CHORD					
8	K		1	X3U3A	PL $\frac{3}{4}$x52$\frac{3}{4}$	6	0$\frac{3}{4}$	M270-HPS70W		
8	K		1	X3U3B	PL $\frac{3}{4}$x52$\frac{3}{4}$	6	0$\frac{3}{4}$	M270-HPS70W		
10	F		2	X3U3C	PL $\frac{13}{16}$x10	2	3	FILL		
10	G		2	X3U3D	PL $\frac{13}{16}$x10	2	1$\frac{1}{4}$	FILL		
10	J		2	x4f	L 4x4x$\frac{1}{2}$	1	2	M270-36		
10	H		1	x4p	L 6x4x$\frac{1}{2}$	0	8$\frac{3}{4}$	M270-36		
10	H		1	x4ab	L 6x4x$\frac{1}{2}$	0	11$\frac{1}{2}$	M270-36		
10	K		2	x4s	L 3x3x$\frac{3}{8}$	2	0	M270-36		
21	E		15		$\frac{7}{8}$ ø HSB	0	2$\frac{3}{4}$	MECH. GALV. A325-1		
21	X		15		$\frac{7}{8}$ ø HSW			MECH. GALV. F436		
21	Y		15		LOAD IND. WASH FOR $\frac{7}{8}$ ø HSB			MECH. GALV. F436		

ABM INFO		SHIP	BILL OF MATERIAL					JOB NO.	DRAWING NO.	REV.
								498	45	
PAGE	LINE	MARK	QTY	MARK	MATERIAL	LENGTH FT	LENGTH INCHES	REMARKS	WT	PROCUREMENT NOTES
		45U2U3W	1		TOP CHORD SHIPPING ASS'Y				6804	
			1	12TC3W	TOP CHORD					
8	K		1	X3U3A	PL $\frac{3}{4}$x52$\frac{3}{4}$	6	0$\frac{3}{4}$	M270-HPS70W		
8	K		1	X3U3B	PL $\frac{3}{4}$x52$\frac{3}{4}$	6	0$\frac{3}{4}$	M270-HPS70W		
10	F		2	X3U3C	PL $\frac{13}{16}$x10	2	3	FILL		
10	G		2	X3U3D	PL $\frac{13}{16}$x10	2	1$\frac{1}{4}$	FILL		
10	J		2	x4f	L 4x4x$\frac{1}{2}$	1	2	M270-36		
10	H		1	x4m	L 6x4x$\frac{1}{2}$	0	8$\frac{3}{4}$	M270-36		
10	H		1	x4n	L 6x4x$\frac{1}{2}$	0	11$\frac{1}{2}$	M270-36		
10	K		2	x4s	L 3x3x$\frac{3}{8}$	2	0	M270-36		
21	E		15		$\frac{7}{8}$ ø HSB	0	2$\frac{3}{4}$	MECH. GALV. A325-1		
21	X		15		$\frac{7}{8}$ ø HSW			MECH. GALV. F436		
21	Y		15		LOAD IND. WASH FOR $\frac{7}{8}$ ø HSB			MECH. GALV. F436		
		45U8U7E	1		TOP CHORD SHIPPING ASS'Y				6804	
			1	12TC8E	TOP CHORD					
8	K		1	X3U3A	PL $\frac{3}{4}$x52$\frac{3}{4}$	6	0$\frac{3}{4}$	M270-HPS70W		
8	K		1	X3U3B	PL $\frac{3}{4}$x52$\frac{3}{4}$	6	0$\frac{3}{4}$	M270-HPS70W		
10	F		2	X3U3C	PL $\frac{13}{16}$x10	2	3	FILL		
10	G		2	X3U3D	PL $\frac{13}{16}$x10	2	1$\frac{1}{4}$	FILL		
10	J		2	x4f	L 4x4x$\frac{1}{2}$	1	2	M270-36		
10	H		1	x4m	L 6x4x$\frac{1}{2}$	0	8$\frac{3}{4}$	M270-36		
10	H		1	x4n	L 6x4x$\frac{1}{2}$	0	11$\frac{1}{2}$	M270-36		
10	K		2	x4s	L 3x3x$\frac{3}{8}$	2	0	M270-36		
21	E		15		$\frac{7}{8}$ ø HSB	0	2$\frac{3}{4}$	MECH. GALV. A325-1		
21	X		15		$\frac{7}{8}$ ø HSW			MECH. GALV. F436		
21	Y		15		LOAD IND. WASH FOR $\frac{7}{8}$ ø HSB			MECH. GALV. F436		
		45U7U8W	1		TOP CHORD SHIPPING ASS'Y				6804	
			1	12TC8W	TOP CHORD					
8	K		1	X3U3A	PL $\frac{3}{4}$x52$\frac{3}{4}$	6	0$\frac{3}{4}$	M270-HPS70W		
8	K		1	X3U3B	PL $\frac{3}{4}$x52$\frac{3}{4}$	6	0$\frac{3}{4}$	M270-HPS70W		
10	F		2	X3U3C	PL $\frac{13}{16}$x10	2	3	FILL		
10	G		2	X3U3D	PL $\frac{13}{16}$x10	2	1$\frac{1}{4}$	FILL		
10	J		2	x4f	L 4x4x$\frac{1}{2}$	1	2	M270-36		
10	H		1	x4p	L 6x4x$\frac{1}{2}$	0	8$\frac{3}{4}$	M270-36		
10	H		1	x4ab	L 6x4x$\frac{1}{2}$	0	11$\frac{1}{2}$	M270-36		
10	K		2	x4s	L 3x3x$\frac{3}{8}$	2	0	M270-36		
21	E		15		$\frac{7}{8}$ ø HSB	0	2$\frac{3}{4}$	MECH. GALV. A325-1		
21	X		15		$\frac{7}{8}$ ø HSW			MECH. GALV. F436		
21	Y		15		LOAD IND. WASH FOR $\frac{7}{8}$ ø HSB			MECH. GALV. F436		

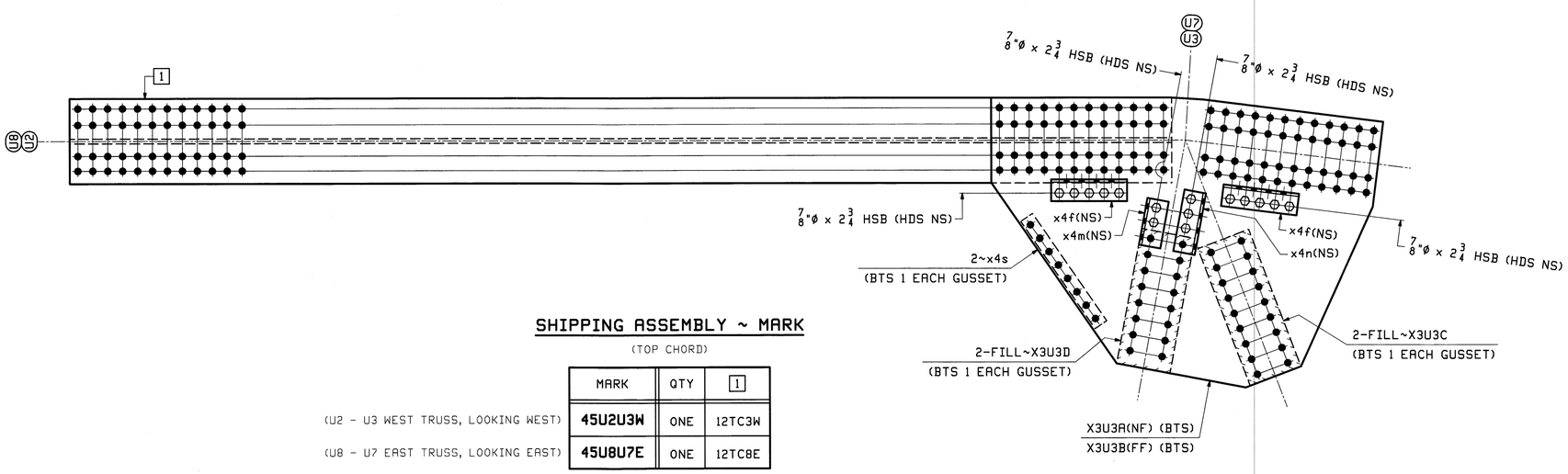

SHIPPING ASSEMBLY ~ MARK

(TOP CHORD)

	MARK	QTY	1
(U2 - U3 WEST TRUSS, LOOKING WEST)	45U2U3W	ONE	12TC3W
(U8 - U7 EAST TRUSS, LOOKING EAST)	45U8U7E	ONE	12TC8E

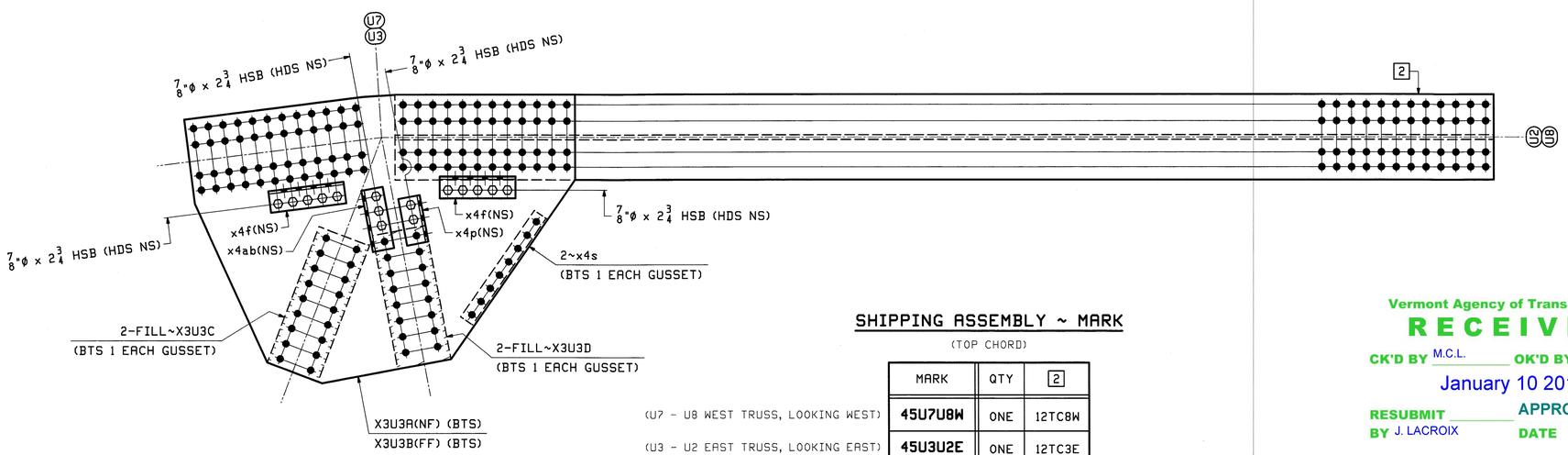

SHIPPING ASSEMBLY ~ MARK

(TOP CHORD)

	MARK	QTY	2
(U7 - U8 WEST TRUSS, LOOKING WEST)	45U7U8W	ONE	12TC8W
(U3 - U2 EAST TRUSS, LOOKING EAST)	45U3U2E	ONE	12TC3E

NOTES:
1. NF - DENOTES NEAR FACE OF TOP CHORD.
2. FF - DENOTES FAR FACE OF TOP CHORD.
3. NS - DENOTES NEAR SIDE.
4. FS - DENOTES FAR SIDE.

Vermont Agency of Transportation
RECEIVED
CK'D BY M.C.L. OK'D BY S.S.S.
January 10 2012
RESUBMIT APPROVED ✓
BY J. LACROIX DATE 01-12-2012

REV.	DATE	REMARKS	DWN	CHK	APVL	SHOP
					JAN 9 2012	
0					NOV 30 2011	

MATERIAL:	SURFACE PREP. & PAINT:	HOLES:	SHOP BOLTS:
M270-50 (UN)	HOT-DIP GALV.	$\frac{15}{16}$ø (UN)	$\frac{7}{8}$ø (UN)

DESCRIPTION: SHIPPING ASSEMBLY (U2-U3, U8-U7, U7-U8 & U3-U2)

CASCO BAY STEEL STRUCTURES, INC.
1 WALLACE AVE. PHONE (207) 780-6722
SOUTH PORTLAND, ME 04106 FAX. (207) 780-6726
TENSOR 3073

STRUCTURE: VT RTE 107 OVER WHITE RIVER		DRAWN: EEO	DATE: 11/22
		CHKD: PCP	DATE: 11/28
LOCATION:	BETHEL, VT.	JOB NO.	DWG NO.
PROJ NO.	BRF 022-1(14)	498	45
CUSTOMER:	BECK & BELLUCCI		REV. △

EEO Tue, Nov 29, 2011 03:47:28 PM /users/jobs/3073/45 - Rev0