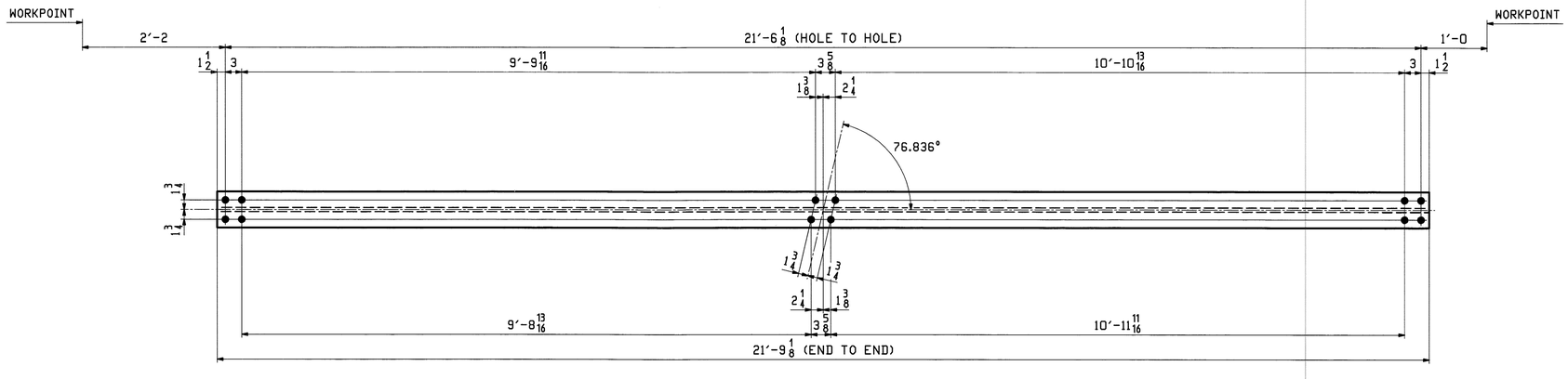


## 4 ~ SWAY FRAME DIAGONAL ~ 31DG1

(V2 & V8)

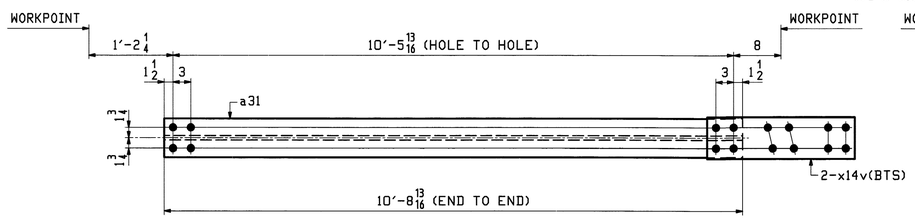


## 4 ~ SWAY FRAME DIAGONAL ~ 31DG2

(V2 & V8)

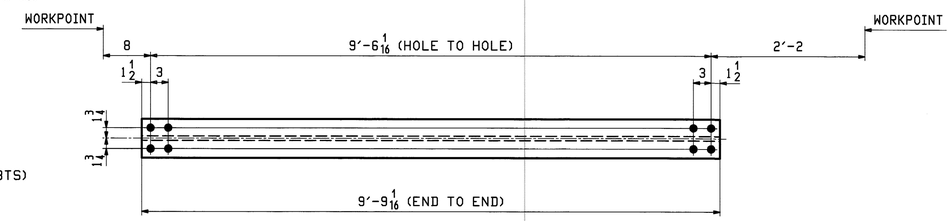


## 4 ~ SWAY FRAME DIAGONAL ~ 31DG3

(V2 & V8)

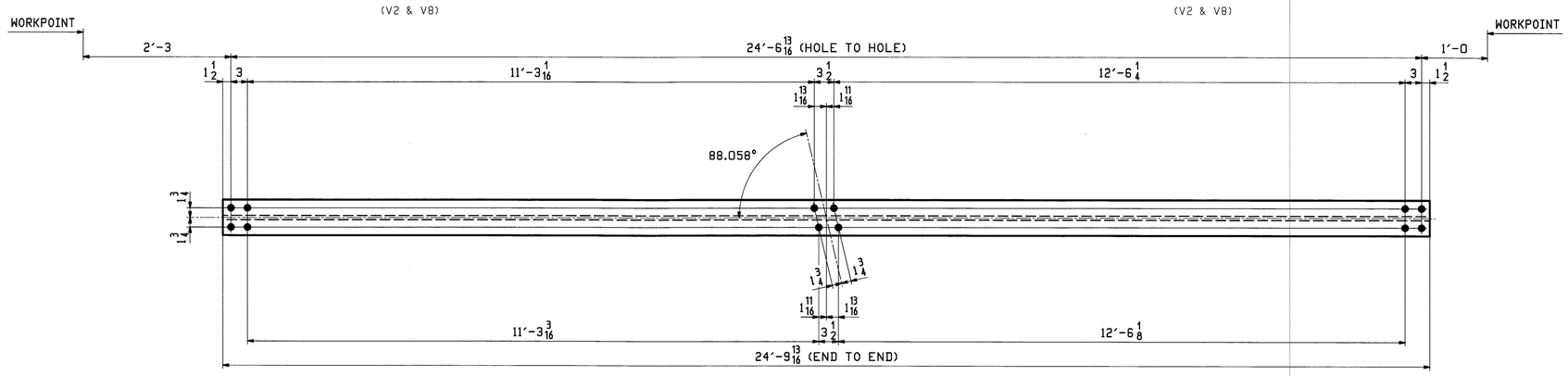


## 4 ~ SWAY FRAME DIAGONAL ~ 31DG4

(V3 & V7)

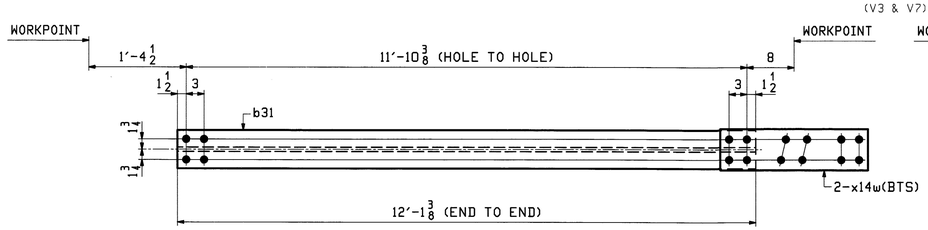


## 4 ~ SWAY FRAME DIAGONAL ~ 31DG5

(V3 & V7)

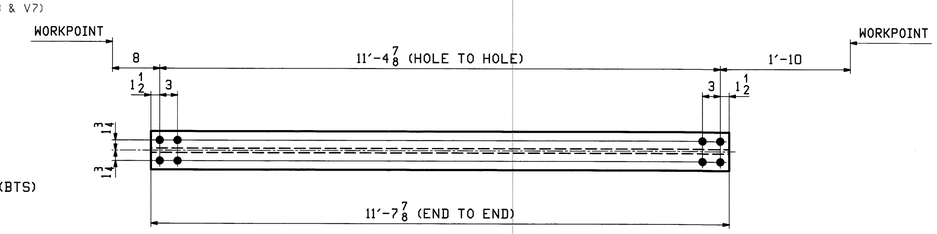


## 4 ~ SWAY FRAME DIAGONAL ~ 31DG6

(V3 & V7)

## BILL OF MATERIAL

| ABM INFO PAGE | ABM INFO LINE | SHIP MARK | QTY | MARK | MATERIAL | LENGTH FT | LENGTH INCHES | REMARKS | WT | PROCUREMENT NOTES |
|---|---|---|---|---|---|---|---|---|---|---|
| | | | | | | | | | | |
| 7 | R | 31DG1 | 4 | | W 8x24 | 21 | 9 1/8 | | 522 | |
| | | | | | | | | | | |
| | | 31DG2 | 4 | | SWAY DIAGONAL | | | | 307 | |
| 7 | S | | 4 | a31 | W 8x24 | 10 | 8 13/16 | | | |
| 11 | R | | 8 | x14v | PL 1/2x7 | 2 | 1 | | | |
| | | | | | | | | | | |
| 7 | T | 31DG3 | 4 | | W 8x24 | 9 | 9 1/16 | | 234 | |
| | | | | | | | | | | |
| 7 | U | 31DG4 | 4 | | W 8x24 | 24 | 9 13/16 | | 596 | |
| | | | | | | | | | | |
| | | 31DG5 | 4 | | SWAY DIAGONAL | | | | 340 | |
| 7 | V | | 4 | b31 | W 8x24 | 12 | 1 3/8 | | | |
| 12 | F | | 8 | x14w | PL 1/2x7 | 2 | 1 | | | |
| | | | | | | | | | | |
| 7 | W | 31DG6 | 4 | | W 8x24 | 11 | 7 7/8 | | 280 | |
| | | | | | | | | | | |

JOB NO. 498 | DRAWING NO. 31 | REV.

Vermont Agency of Transportation
RECEIVED
CK'D BY M.C.L. OK'D BY S.S.S.
January 10 2012
RESUBMIT APPROVED ✓
BY J. LACROIX DATE 01-12-2012

NOTES:
1. FOR GENERAL NOTES SEE SHEET GN1.
2. HOLES IN BOTH FLANGES ARE ALIKE.

| REV. | DATE | REMARKS | DWN | CHK | APVL | SHOP |
|---|---|---|---|---|---|---|
| 0 | | | | | JAN 9 2012 / NOV 18 2011 | |

| MATERIAL: | SURFACE PREP. & PAINT: | HOLES: | SHOP BOLTS: |
|---|---|---|---|
| M270-50 (UN) | HOT-DIP GALV. | 15/16Ø (UN) | NONE |

DESCRIPTION: SWAY FRAME DIAGONALS


CASCO BAY STEEL STRUCTURES, INC.
1 WALLACE AVE. PHONE (207) 780-6722
SOUTH PORTLAND, ME 04106 FAX. (207) 780-6726
TENSOR 3073


STRUCTURE: VT RTE 107 OVER WHITE RIVER

| | DRAWN: | DATE: |
|---|---|---|
| | EEO | 10/30 |
| | CHKD: PCP | DATE: 11/01 |
| LOCATION: BETHEL, VT. | JOB NO. | DWG NO. |
| PROJ NO. BRF 022-1(14) | 498 | 31 |
| CUSTOMER: BECK & BELLUCCI | | REV. △ |

EEO Thu, Nov 17, 2011 02:01:54 PM /users/jobs/2073/31; Rev.0