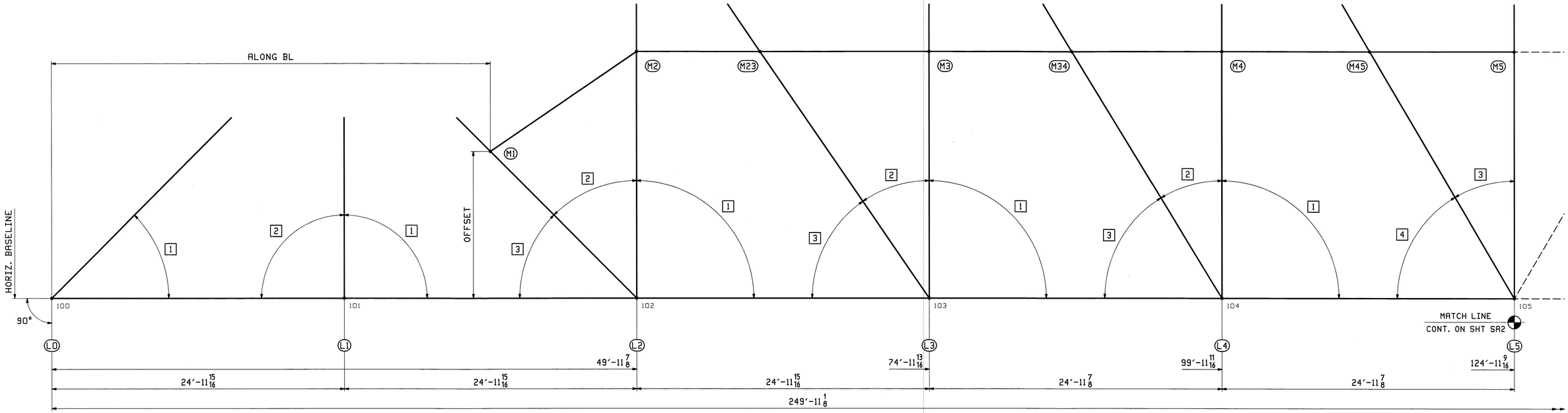

BOTTOM CHORD SHOP ASSEMBLY DIAGRAM

BOTTOM CHORD				
PANEL POINT	CHD 1	CHD 2	CHD 3	CHD 4
L0	7'-7 7/8			
L1	14'-1 11/16	14'-1 11/16		
L2	14'-1 11/16	7'-7 7/8	7'-7 7/8	
L3	14'-1 11/16	5'-11 1/4	9'-3 11/16	
L4	14'-1 11/16	5'-4 7/8	9'-9 1/2	
L5			5'-3 1/16	9'-11 1/8

MID CHORD		
PANEL POINT	ALONG BL	OFFSET
M1	37'-5 15/16	12'-5 15/16
M2	49'-11 7/8	21'-0
M23	60'-6 7/16	20'-11 7/8
M3	74'-11 13/16	21'-0 1/16
M34	87'-2 1/16	20'-11 7/8
M4	99'-11 11/16	21'-0 1/16
M45	112'-7 5/16	20'-11 15/16
M5	124'-11 9/16	21'-0

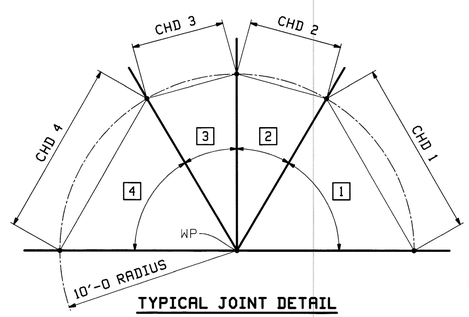

TYPICAL JOINT DETAIL

Vermont Agency of Transportation
RECEIVED
CK'D BY M.C.L. OK'D BY S.S.S.
January 10 2012
RESUBMIT ____ APPROVED ✓
BY J. LACROIX DATE 01-12-2012

BLOCKING NOTES:
1. CENTER PUNCH MEMBERS AT 10'-0 OFFSET FROM WORKPOINT.
2. SHOP TO USE CENTER PUNCH TO LOCATE MEMEBERS AT THE PROPER ALIGNMENT, AS SHOWN IN "TYPICAL JOINT DETAIL".
3. EAST TRUSS (T1) & WEST TRUSS (T2) ARE IDENTICAL.
4. ALL LENGTHS SHOWN ARE CAMBERED.
5. FOR SHIPPING MARKS SEE SHEET E1.

REV.	DATE	REMARKS	DWN	CHK	APVL	SHOP
					JAN 9 2012	
0					NOV 30 2011	

MATERIAL: | SURFACE PREP. & PAINT: | HOLES: | SHOP BOLTS:

DESCRIPTION: SHOP ASSEMBLY - BOTTOM CHORD

CASCO BAY STEEL STRUCTURES, INC.
1 WALLACE AVE. PHONE (207) 780-6722
SOUTH PORTLAND, ME 04106 FAX. (207) 780-6726
TENSOR 3073

STRUCTURE: VT RTE 107 OVER WHITE RIVER
DRAWN: EEO DATE: 11/22
CHK'D: PCP DATE: 11/28
LOCATION: BETHEL, VT.
PROJ NO. BRF 022-1(14)
CUSTOMER: BECK & BELLUCCI
JOB NO. 498
DWG NO. SA1
REV. △

EEO Tue, Nov 29, 2011 03:51:16 PM /users/jobs/3073/SA1.Rev0