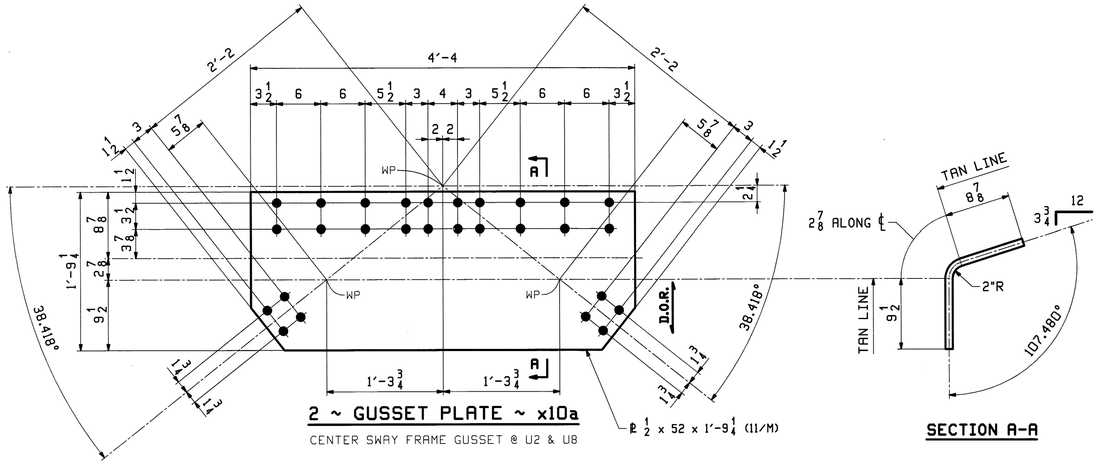

2 ~ GUSSET PLATE ~ x10a

CENTER SWAY FRAME GUSSET @ U2 & U8

SECTION A-A

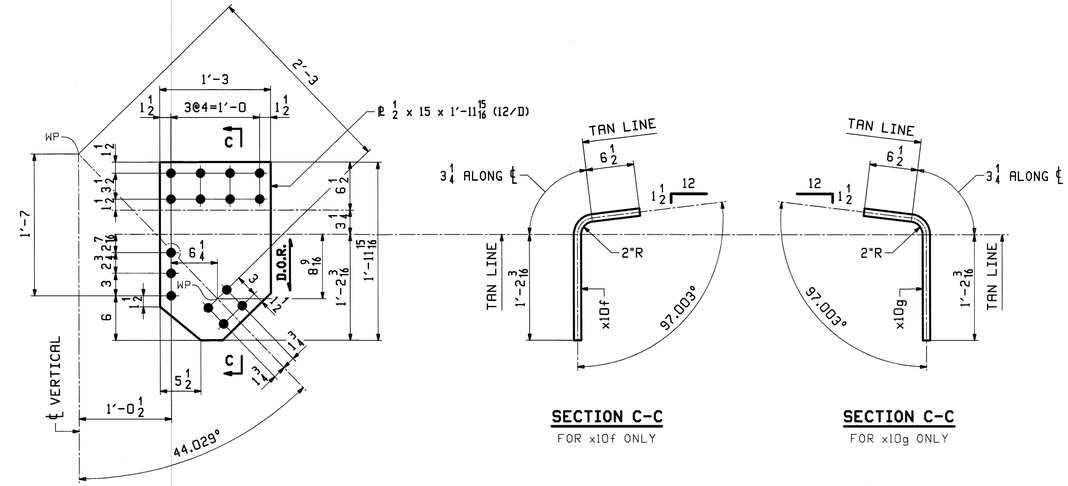

2 ~ GUSSET PLATE ~ x10f

TOP CORNER SWAY GUSSET @ U3 (WEST TRUSS) & U7 (EAST TRUSS)

SECTION C-C

FOR x10f ONLY

SECTION C-C

FOR x10g ONLY

2 ~ GUSSET PLATE ~ x10g

TOP CORNER SWAY GUSSET @ U3 (EAST TRUSS) & U7 (WEST TRUSS)

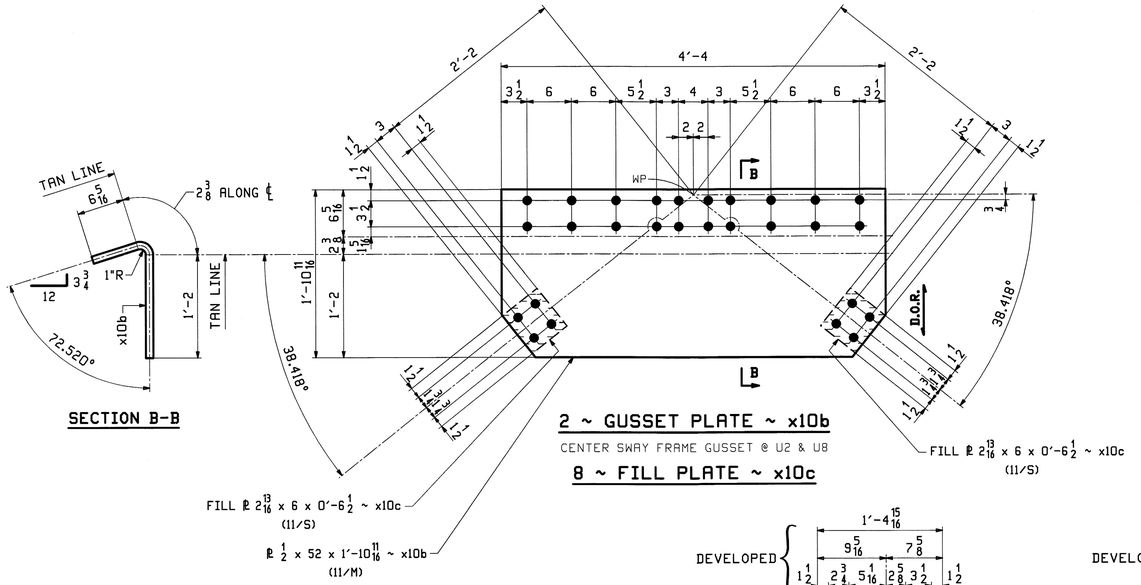

SECTION B-B

2 ~ GUSSET PLATE ~ x10b

CENTER SWAY FRAME GUSSET @ U2 & U8

8 ~ FILL PLATE ~ x10c

FILL PL 2 13/16 x 6 x 0'-6½ ~ x10c
(11/S)

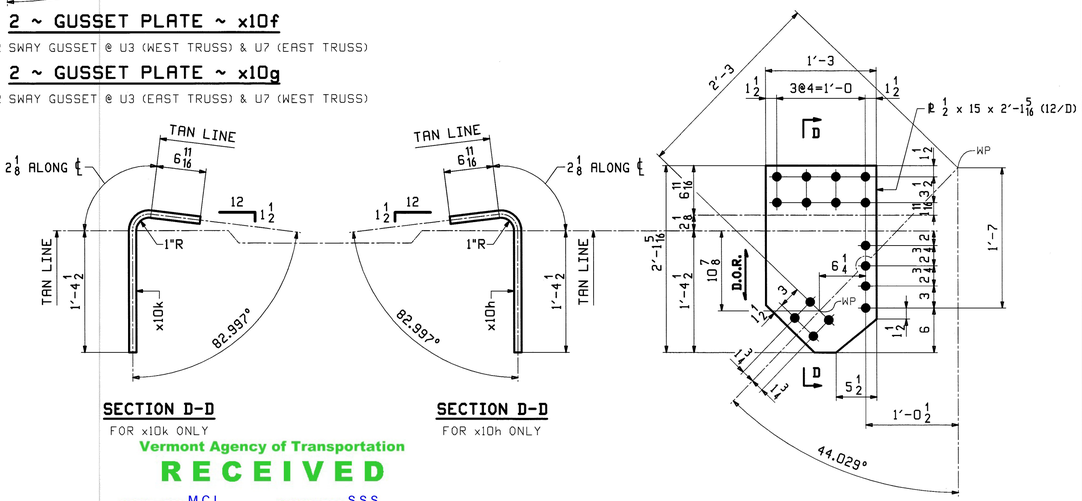

SECTION D-D

FOR x10k ONLY

SECTION D-D

FOR x10h ONLY

2 ~ GUSSET PLATE ~ x10h

TOP CORNER SWAY GUSSET @ U3 (WEST TRUSS) & U7 (EAST TRUSS)

2 ~ GUSSET PLATE ~ x10k

TOP CORNER SWAY GUSSET @ U3 (EAST TRUSS) & U7 (WEST TRUSS)

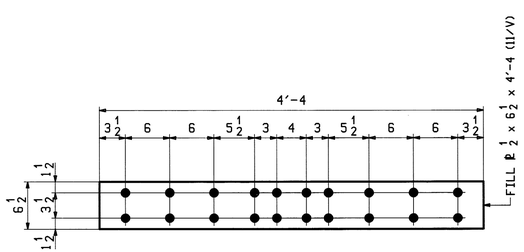

2 ~ FILL PLATE ~ x10d

FILL PL BTWN CENTER SWAY FRAME GUSSETS (U2 & U8)

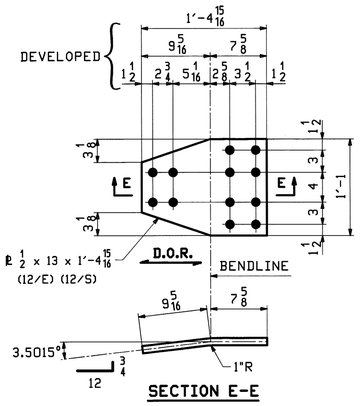

SECTION E-E

4 ~ GUSSET PLATE ~ x10m

TOP GUSSET @ LONG. STRUT (U3 & U7, U4 & U6)

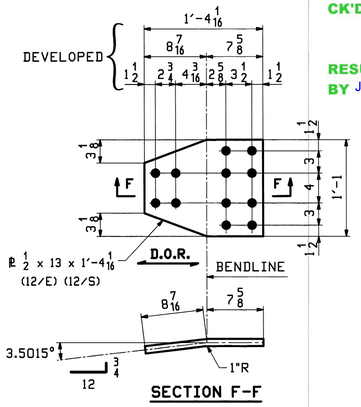

SECTION F-F

4 ~ GUSSET PLATE ~ x10n

BTM GUSSET @ LONG. STRUT (U3 & U7, U4 & U6)

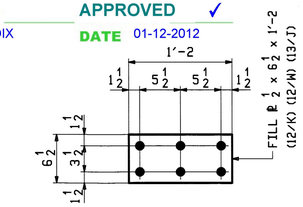

10 ~ FILL PLATE ~ x10p

FILL PL @ BTM OF TOP STRUT (U3 & U7, U4 & U6, U5)

NOTES:

1. FOR GENERAL NOTES SEE SHEET GN1.
2. D.O.R. - DENOTES DIRECTION OF ROLLING.

Vermont Agency of Transportation

RECEIVED

CK'D BY M.C.L. OK'D BY S.S.S.

January 10 2012

RESUBMIT APPROVED ✓

BY J. LACROIX DATE 01-12-2012

JAN 9 2012

NOV 18 2011

REV.	DATE	REMARKS	DWN	CHK	APVL	SHOP
0						

MATERIAL:	SURFACE PREP. & PAINT:	HOLES:	SHOP BOLTS:
M270-50 (UN)	HOT-DIP GALV.	15/16Ø (UN)	NONE

DESCRIPTION: TOP STRUT STANDARDS

CASCO BAY STEEL STRUCTURES, INC.
1 WALLACE AVE. PHONE (207) 780-6722
SOUTH PORTLAND, ME 04106 FAX. (207) 780-6726
TENSOR 3073

STRUCTURE: VT RTE 107 OVER WHITE RIVER		DRAWN: EEO	DATE: 10/18
		CHKD: PCP	DATE: 10/31
LOCATION: BETHEL, VT.		JOB NO.	DWG NO.
PROJ NO. BRF 022-1(14)		498	X10
CUSTOMER: BECK & BELLUCCI			REV. △

EEO Thu, Nov 17, 2011 03:02:24 PM /users/pbw/2073/X10 - Rev0