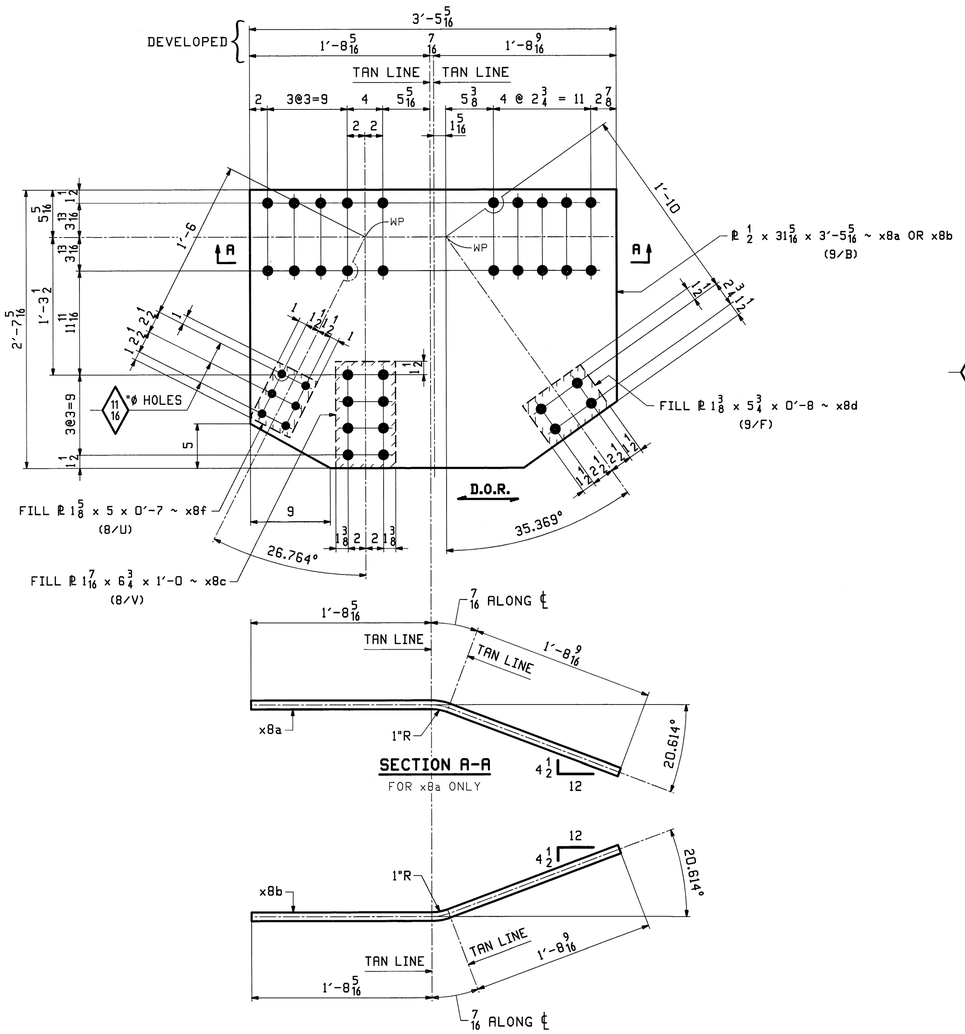

2 ~ GUSSET PLATE ~ x8a

TOP GUSSET @ U1 (WEST TRUSS) & U9 (EAST TRUSS)

2 ~ GUSSET PLATE ~ x8b

TOP GUSSET @ U1 (EAST TRUSS) & U9 (WEST TRUSS)

12 ~ FILL PLATE ~ x8c

4 ~ FILL PLATE ~ x8d

48 ~ FILL PLATE ~ x8f

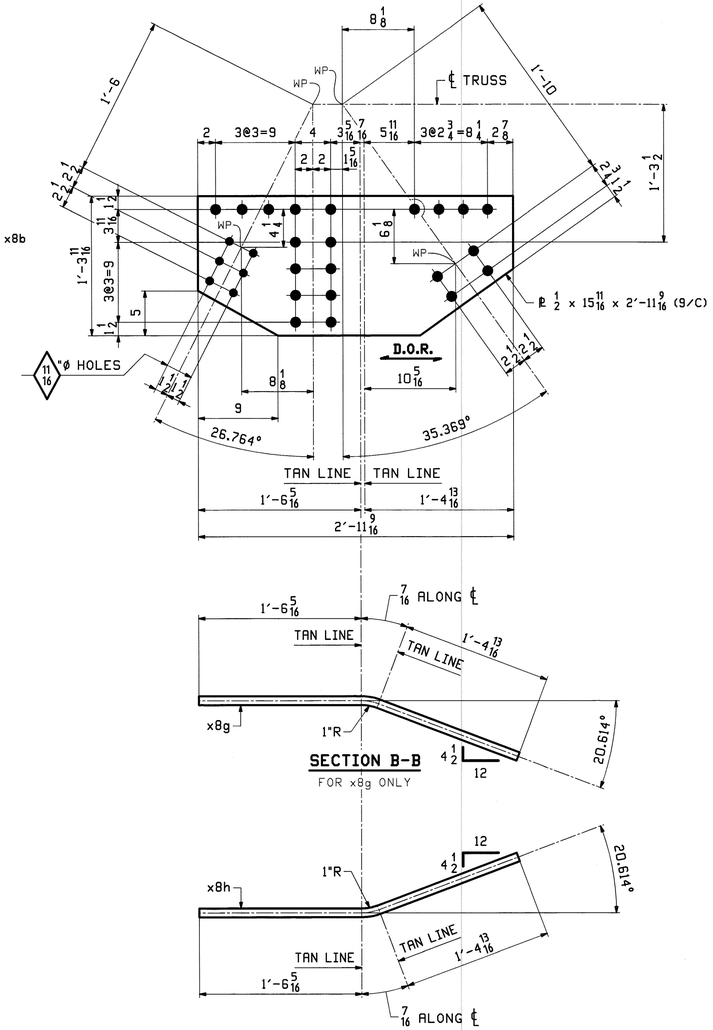

2 ~ GUSSET PLATE ~ x8g

BTM GUSSET @ U1 (WEST TRUSS) & U9 (EAST TRUSS)

2 ~ GUSSET PLATE ~ x8h

BTM GUSSET @ U1 (EAST TRUSS) & U9 (WEST TRUSS)

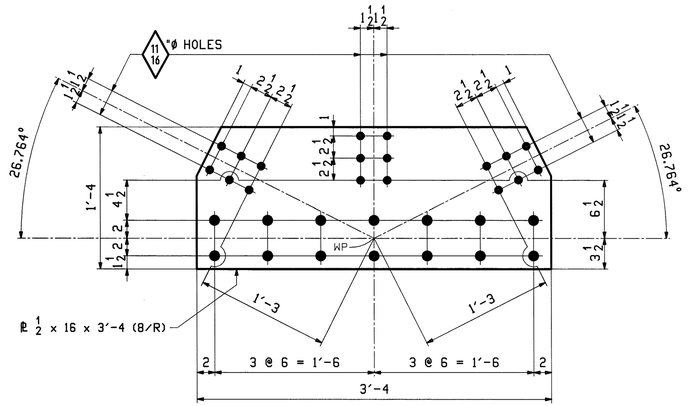

16 ~ GUSSET PLATE ~ x8k

CTR GUSSETS @ U1 & U9

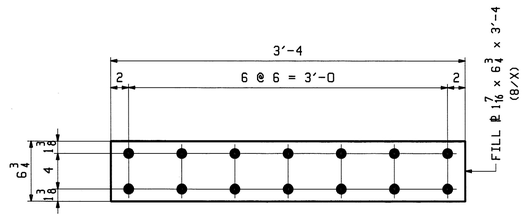

12 ~ FILL PLATE ~ x8m

FILL PL @ CTR GUSSETS (U1 & U9)

NOTES:

1. FOR GENERAL NOTES SEE SHEET GN1.
2. **D.O.R.** – DENOTES DIRECTION OF ROLLING.

Vermont Agency of Transportation
RECEIVED
CK'D BY M.C.L. OK'D BY S.S.S.
January 10 2012
RESUBMIT APPROVED ✓
BY J. LACROIX DATE 01-12-2012

REV.	DATE	REMARKS	DWN	CHK	APVL	SHOP
					JAN 9 2012	
0					NOV 18 2011	

MATERIAL:	SURFACE PREP. & PAINT:	HOLES:	SHOP BOLTS:
M270-50 (UN)	HOT-DIP GALV.	15/16 Ø (UN)	7/8 Ø (UN)

DESCRIPTION: TOP STRUT STANDARDS

CASCO BAY STEEL STRUCTURES, INC.
1 WALLACE AVE. PHONE (207) 780-6722
SOUTH PORTLAND, ME 04106 FAX. (207) 780-6726
TENSOR 3073

STRUCTURE: VT RTE 107 OVER WHITE RIVER		DRAWN: EEO	DATE: 10/14
		CHKD: PCP	DATE: 10/18
LOCATION:	BETHEL, VT.	JOB NO.	DWG NO.
PROJ NO.	BRF 022-1(14)	498	X8
CUSTOMER:	BECK & BELLUCCI		REV. △

EEO Thu, Nov 17, 2011 11:54:50 AM /users/jobs/2073/X8.Rev0