** NOTE **
THE PURPOSE OF THIS DRAWING IS TO COORDINATE GEOMETRIC CONTROL INFORMATION AND CONNECTION SPACING. THIS DWG IS SUBMITTED FOR INFORMATION ONLY & IS NOT INTENDED FOR SHOP FABRICATION. DETAIL DWGS WILL SHOW ALL WELDING AND DIMENSIONS REQ'D FOR FABRICATION.

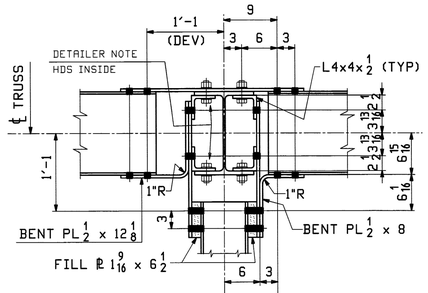

SECT "B"

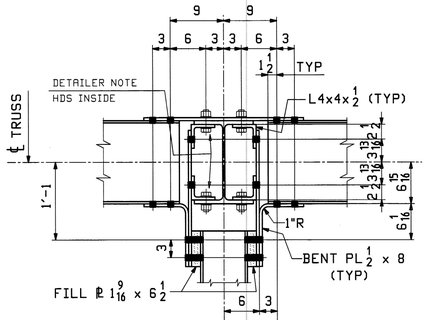

SECT "D"

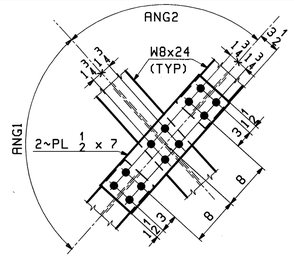

SWAY FRAME CTR CONN.

PP	ANG1	ANG2
M2	76.836°	103.164°
M3	91.942°	88.058°
M4 & M5	96.074°	83.926°

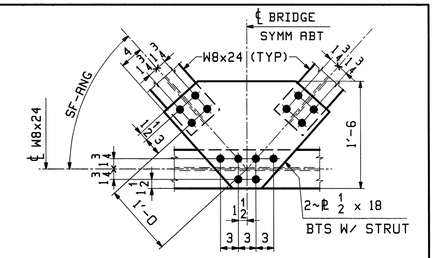

SWAY FRAME CTR STRUT CONN.

PP	SF-ANG
M2	38.418°
M3	45.971°
M4 & M5	48.037°

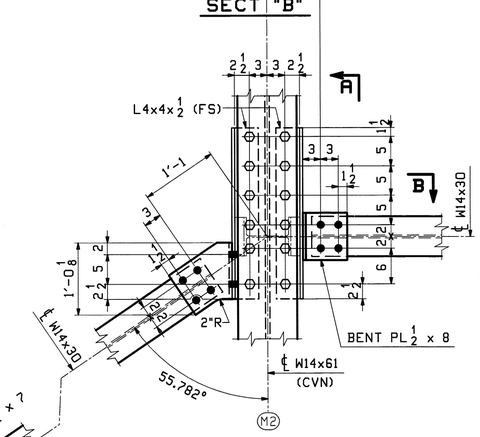

PANEL POINT M2 INTERIOR CONN

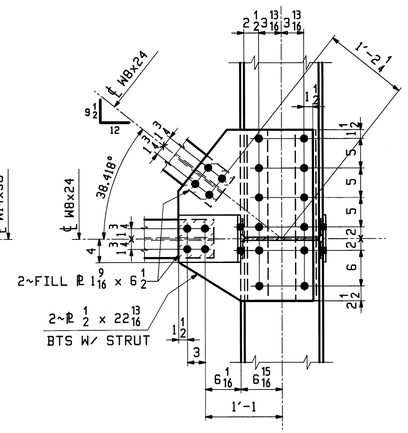

SECT "A"

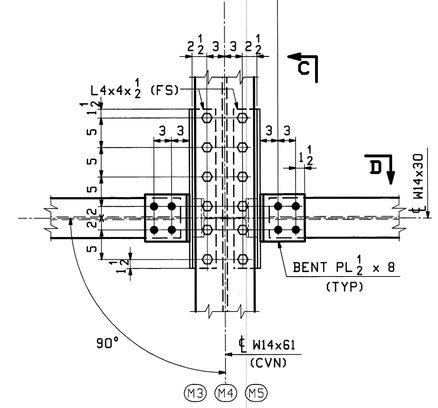

PANEL POINT M3, M4 & M5 INTERIOR CONN

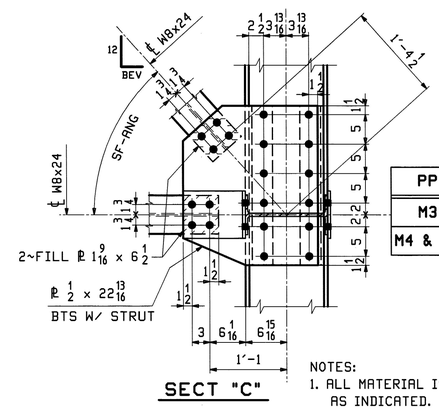

SECT "C"

PP	SF-ANG	BEV
M3	45.971°	11 5/8
M4 & M5	48.037°	10 13/16

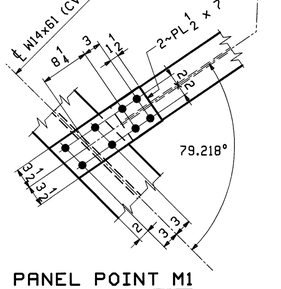

PANEL POINT M1

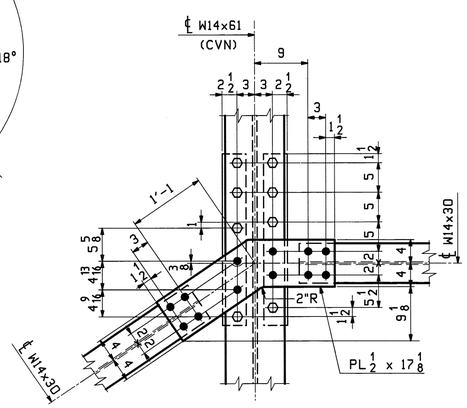

PANEL POINT M2 EXTERIOR CONN

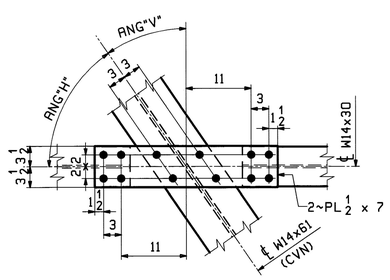

PANEL POINT M23, M34 & M45

PP	ANG"H"	ANG"V"
M23	55.469°	34.531°
M34	58.627°	31.373°
M45	59.534°	30.466°

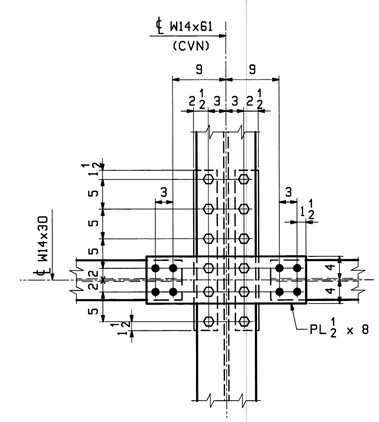

PANEL POINT M3, M4 & M5 EXTERIOR CONN

Vermont Agency of Transportation
RECEIVED
CK'D BY M.C.L. OK'D BY S.S.S.
January 10 2012
RESUBMIT APPROVED ✓
BY J. LACROIX DATE 01-12-2012

NOTES:
1. ALL MATERIAL IS M270-50 (UN), WITH CVN & FCM TESTING AS INDICATED. ALL CLIP Ls SHALL BE M270-36. ALL ROLLED SHAPES AND PLATES SHALL BE HOT-DIP GALVANIZED AFTER FABRICATION.
2. BOLTS SHALL BE 7/8ø A325-1 GALV. (UN). ALL BOLTS SHALL BE INSTALLED WITH HEADS EXPOSED TO PUBLIC VIEW (UN) WITH ONE HARDENNED WASHER AND ONE DTI WASHER. BOLTS AND WASHERS SHALL BE MECHANICALLY GALVANIZED. RFI-TEC-3073005
3. DUE TO ROLLING MILL TOLERANCE, THE ACTUAL THICKNESS OF FILL PLATES MAY VARY FROM WHAT IS SHOWN ON THIS DWG. THE SHOP WILL BE RESPONSIBLE FOR ADJUSTING FILL THICKNESS AS REQUIRED TO SUIT THE ACTUAL MATERIAL SIZE. FILL PLATES SHALL BE A SINGLE THICKNESS PLATE.
4. INTERIOR AND EXTERIOR GUSSET PLATES ARE IDENTICAL (UN).

REV.	DATE	REMARKS	DWN	CHK	APVL	SHOP
0					JAN 9 2012 / NOV 18 2011	

MATERIAL:	SURFACE PREP. & PAINT:	HOLES:	SHOP BOLTS:
M270-50 (UN)	HOT-DIP GALV.	15/16ø (UN)	7/8ø (UN)

DESCRIPTION: TRUSS LAYOUT @ MID-PANEL CONNECTIONS

CASCO BAY STEEL STRUCTURES, INC.
1 WALLACE AVE. PHONE (207) 780-6722
SOUTH PORTLAND, ME 04106 FAX. (207) 780-6726
TENSOR 3073

STRUCTURE: VT RTE 107 OVER WHITE RIVER	DRAWN: WL	DATE: 09/24	
	CHKD: PCP	DATE: 09/28	
LOCATION: BETHEL, VT.	JOB NO.	DWG NO.	
PROJ NO. BRF 022-1(14)	498	TD4	
CUSTOMER: BECK & BELLUCCI		REV. △	

SCALE 1.0" = 1.0'

PCP Tue, Oct 11, 2011 03:29:16 PM /users/jobs/3073/TD4 - Rev.0