Vermont Agency of Transportation
RECEIVED
CK'D BY M.C.L. OK'D BY S.S.S.
January 10 2012
RESUBMIT APPROVED ✓
BY J. LACROIX DATE 01-12-2012

NOTE "FB":
-CONN. TO INTERIOR & EXTERIOR GUSSET TO BE IDENTICAL. USE $1\frac{1}{16}$"ø HOLES FOR 1"ø HS BOLTS @ THESE HOLES ONLY.
RFI-TEC-3073006

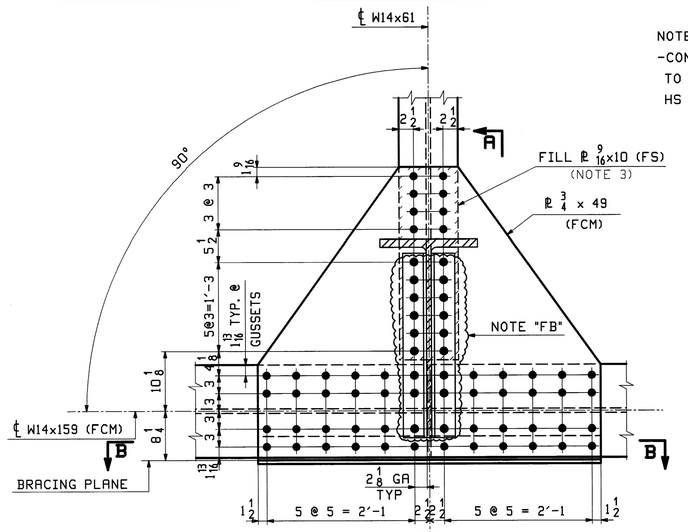

PANEL POINT L1
TRUSS T2 SHOWN, T1 OPP. HAND

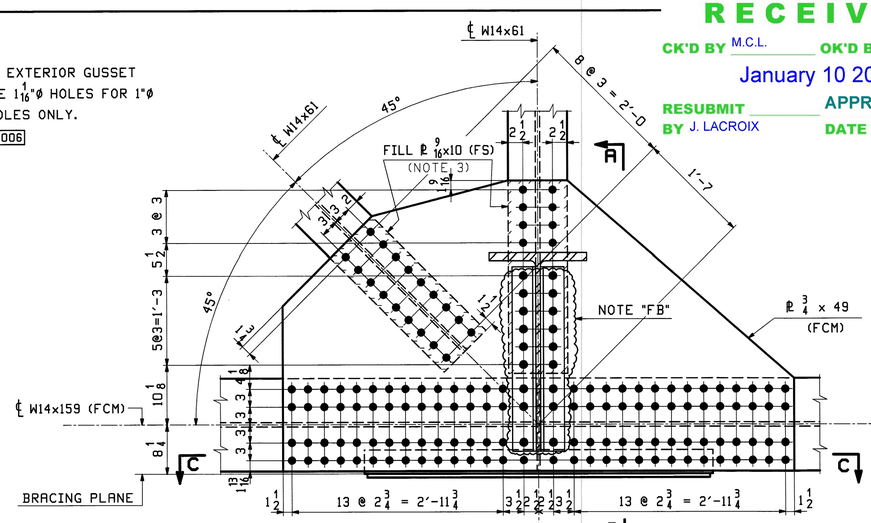

PANEL POINT L2
TRUSS T2 SHOWN, T1 OPP. HAND

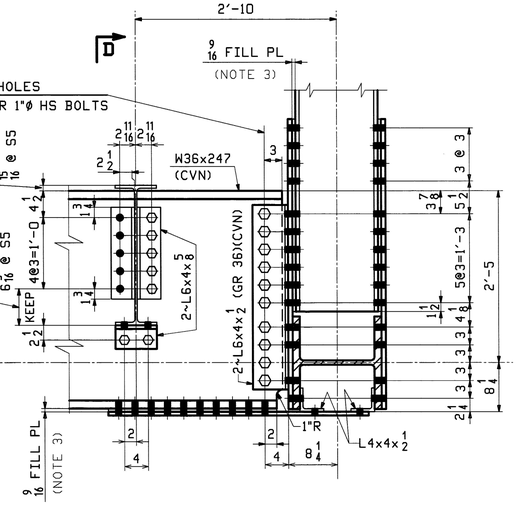

SECTION A-A

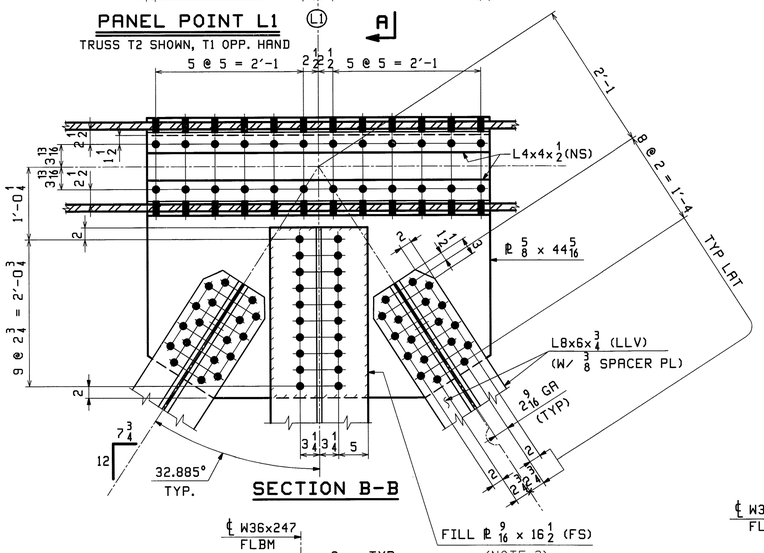

SECTION B-B

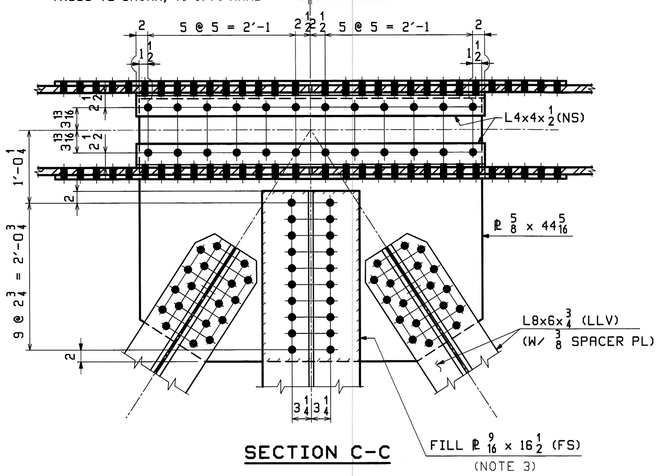

SECTION C-C

** NOTE **
THE PURPOSE OF THIS DRAWING IS TO COORDINATE GEOMETRIC CONTROL INFORMATION AND CONNECTION SPACING. THIS DWG IS SUBMITTED FOR INFORMATION ONLY & IS NOT INTENDED FOR SHOP FABRICATION. DETAIL DWGS WILL SHOW ALL WELDING AND DIMENSIONS REQ'D FOR FABRICATION.

NOTES:

1. ALL MATERIAL IS M270-50 (UN), WITH CVN & FCM TESTING AS INDICATED. ALL CONN. Ls SHALL BE M270-36. ALL ROLLED SHAPES AND PLATES SHALL BE HOT-DIP GALVANIZED AFTER FABRICATION.
2. BOLTS SHALL BE 7/8ø A325-1 GALV. (UN). ALL BOLTS SHALL BE INSTALLED WITH HEADS EXPOSED TO PUBLIC VIEW WITH ONE HARDENNED WASHER AND ONE DTI WASHER. BOLTS AND WASHERS SHALL BE MECHANICALLY GALVANIZED. RFI-TEC-3073005
3. DUE TO ROLLING MILL TOLERANCE, THE ACTUAL THICKNESS OF FILL PLATES MAY VARY FROM WHAT IS SHOWN ON THIS DWG. THE SHOP WILL BE RESPONSIBLE FOR ADJUSTING FILL THICKNESS AS REQUIRED TO SUIT THE ACTUAL MATERIAL SIZE. FILL PLATES SHALL BE A SINGLE THICKNESS PLATE.
4. INTERIOR AND EXTERIOR GUSSET PLATES ARE IDENTICAL (UN).

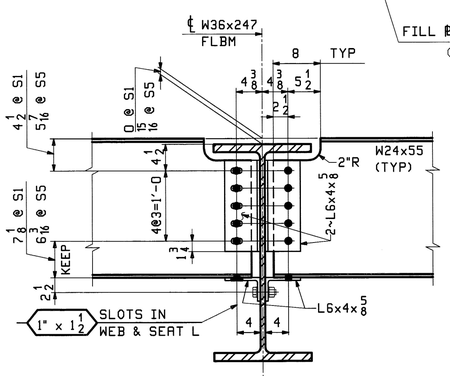

SECTION "D"
@ STRINGERS S1 & S5

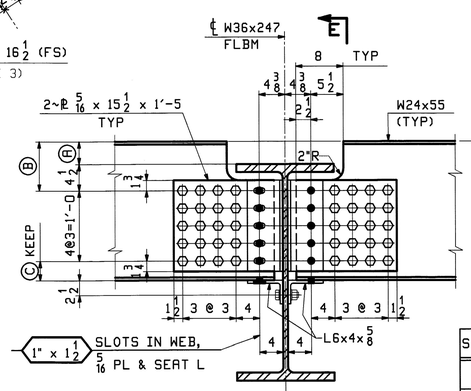

SECTION @ TYP STRINGER
(STRINGER S3 SHOWN, S2 & S4 AS NOTED)

STRINGER	Ⓐ	Ⓑ	Ⓒ
S2	1 3/4	6 1/4	5 3/8
S3	3 13/16	8 5/16	3 5/16
S4	2 15/16	7 7/16	4 3/16

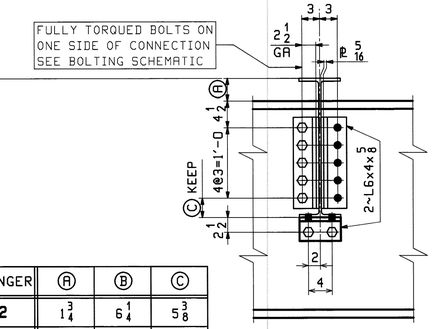

SECTION "E"

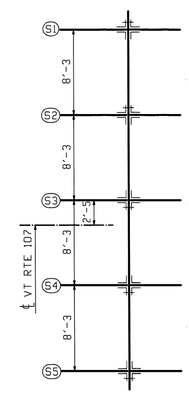

CLIP L BOLTING SCHEMATIC

SCALE 1.0" = 1.0'

REV.	DATE	REMARKS	DWN	CHK	APVL	SHOP
0					JAN 9 2012 / NOV 18 2011	

MATERIAL:	SURFACE PREP. & PAINT:	HOLES:	SHOP BOLTS:
M270-50 (UN)	HOT-DIP GALV.	15/16ø (UN)	7/8ø (UN)

DESCRIPTION: TRUSS LAYOUT @ L1 & L2

CASCO BAY STEEL STRUCTURES, INC.
1 WALLACE AVE. PHONE (207) 780-6722
SOUTH PORTLAND, ME 04106 FAX. (207) 780-6726
TENSOR 3073

STRUCTURE: VT RTE 107 OVER WHITE RIVER		DRAWN: WL	DATE: 09/19
		CHKD: PCP	DATE: 09/22
LOCATION:	BETHEL, VT.	JOB NO.	DWG NO.
PROJ NO.	BRF 022-1(14)	498	TD2
CUSTOMER:	BECK & BELLUCCI		REV. △