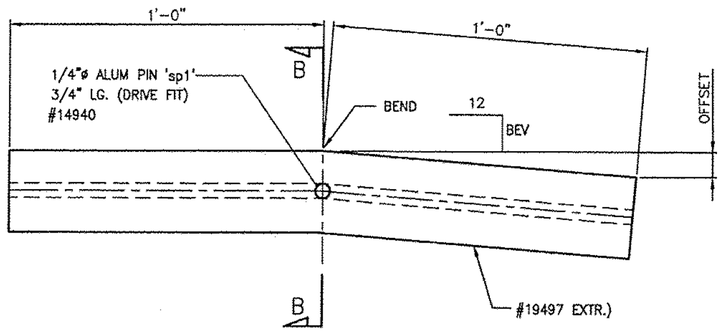

REAR ELEVATION VIEW

HANDRAIL SPLICES				
MK.	QTY.	OFFSET	BEV	LOCATION
SS-23-A1	1	3/16"	9/16	SE
SS-23-A2	1	11/16"	1 3/16	SW
SS-23-A3	1	15/16"	1	NW
SS-23-A4	1	7/16"	1/2	NE

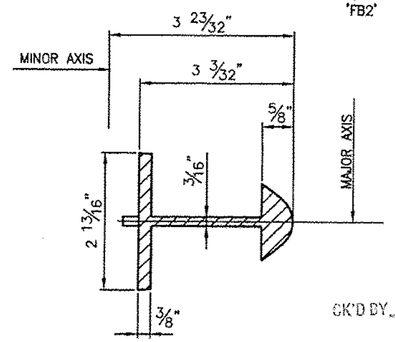

SECTION B-B

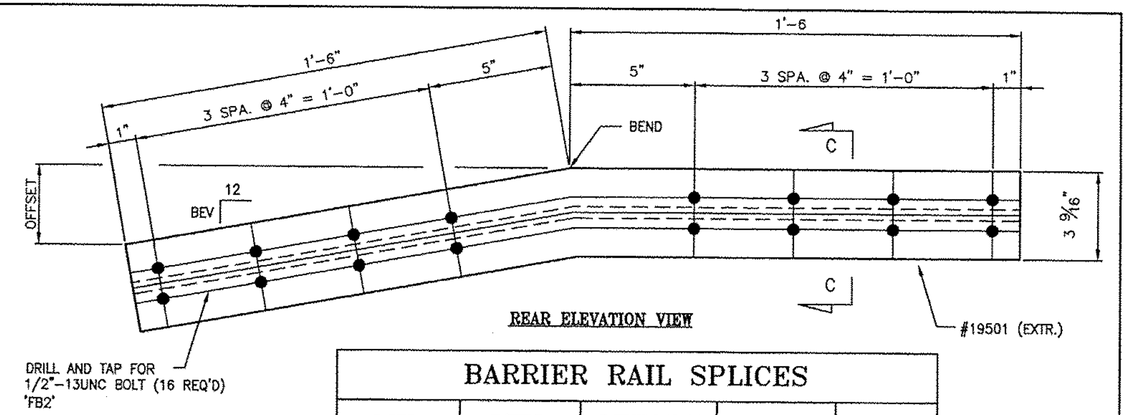

REAR ELEVATION VIEW

BARRIER RAIL SPLICES				
MK.	QTY.	OFFSET	BEV	LOCATION
SS-03-G2	1	3/16"	11/16	SW
SS-03-G3	1	1/8"	7/16	SW
SS-03-G4	2	3/8"	5/16	NE , NW
SS-03-G5	1	1/16"	1/8	NW
SS-03-G6	1	7/16"	1/16	SE
SS-03-G7	1	1/4"	1/16	NE
SS-03-G8	1	3/16"	7/16	SE

RECEIVED
OK'D BY WBP OK'D BY SSS
OCT 24 2011
RESUBMIT ____ APPROVED ✓
BY DATE 11/1/2011

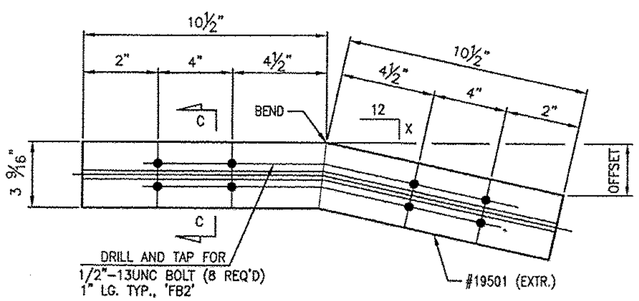

REAR ELEVATION VIEW

BARRIER RAIL SPLICES				
MK.	X	QTY.	OFFSET	LOCATION
SS-03-H1	5/16	2	1/4"	NE, NW
SS-03-H2	1/8	1	1/16"	NW
SS-03-H3	1/16	1	1/8"	NE

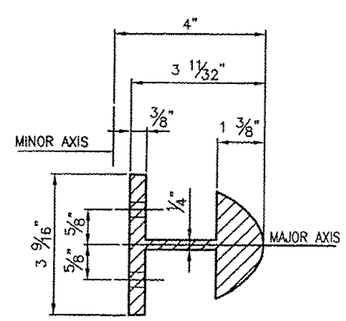

SECTION C-C

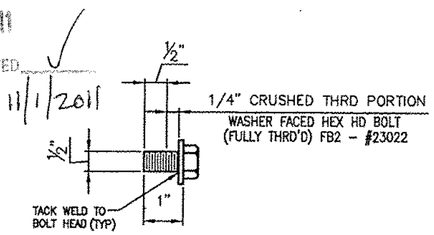

SPLICE BOLT DETAILS

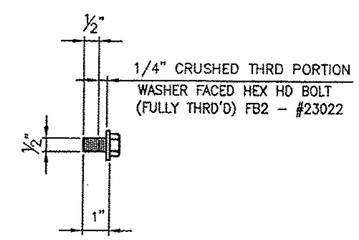

SPLICE BOLT DETAILS

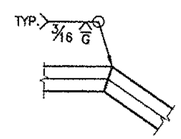

OPTIONAL WELD
@ MITERED SPLICES
(IF REQ'D.)

REV.	DESCRIPTION	BY	DATE

BRIDGE No. 15
PROJECT No. BRF 022-1 (14)
ITEM No: 621.74

LBFoster
Fabricated Bridge Products

L.B. FOSTER COMPANY
1016 GREENTREE RD.
PITTSBURGH, PA 15220

FOR: F. R. LAFAYETTE, INC.
VERMONT AGENCY OF TRANSPORTATION
TOWN OF BETHEL, WINDSOR COUNTY, VT
3-LINE ALUMINUM APPROACH RAIL FOR VT ROUTE 7
(MINOR ARTERIAL) - APPROACH RAIL SPLICE DETAILS

MADE CMS DATE 09/22/11 JOB NO. AR0700
CHECK Dd DATE 10/14/11 DRAWING LB24
REV. NO.