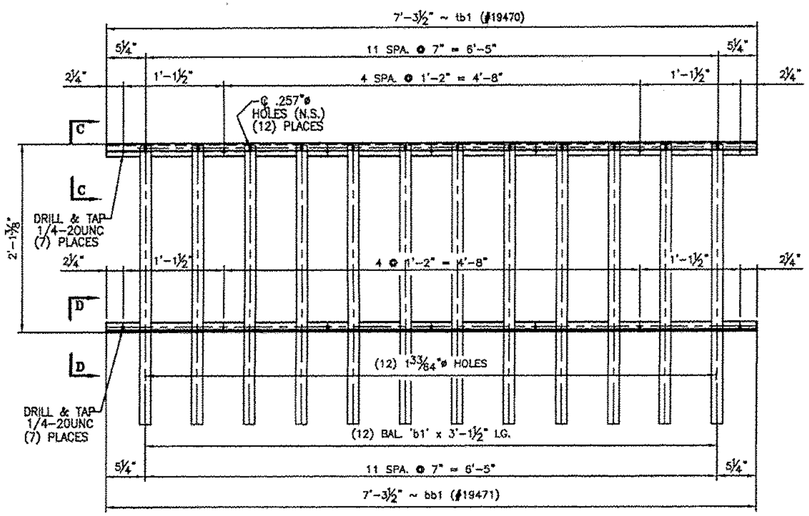

24 REQ'D. ~ BALUSTER PANEL ASSEMBLY 'BP1'
(REAR ELEVATION VIEW)

PLAN VIEW

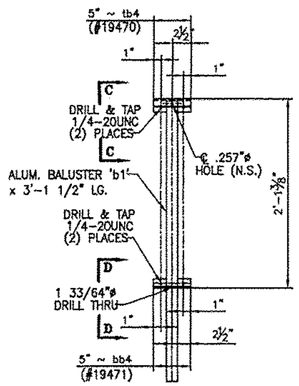

IND. BALUSTER PANEL ASSEMBLY 'BP4'
195 REQ'D.
(REAR ELEVATION VIEW)

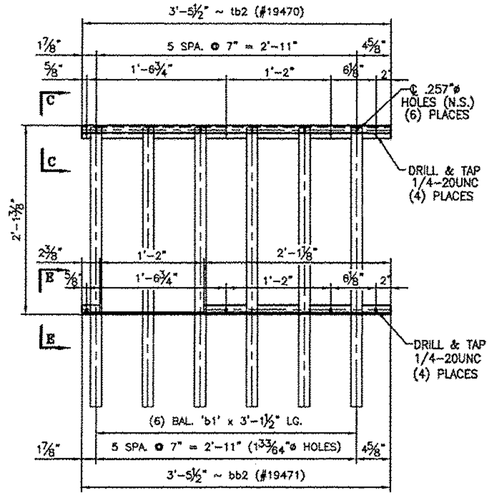

BALUSTER PANEL ASSEMBLY 'BP2'
ONE REQ'D.
(REAR ELEVATION VIEW)

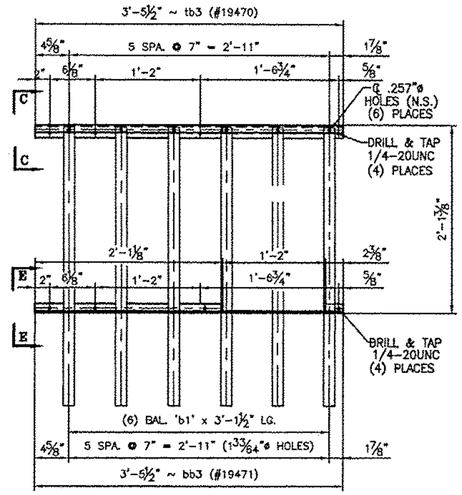

BALUSTER PANEL ASSEMBLY 'BP3'
ONE REQ'D.
(REAR ELEVATION VIEW)

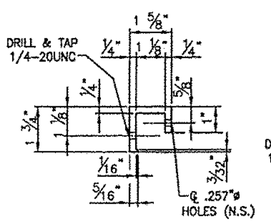

VIEW 'C'-'C'

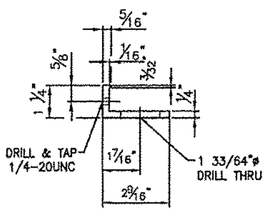

VIEW 'D'-'D'

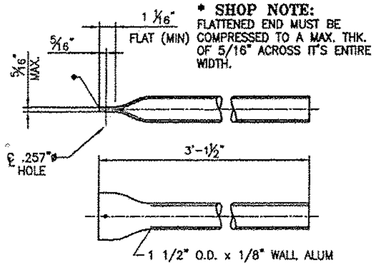

*** SHOP NOTE:** FLATTENED END MUST BE COMPRESSED TO A MAX. THK. OF 5/16" ACROSS IT'S ENTIRE WIDTH.

495 ~ REQ'D BALUSTERS 'b1'
#19451

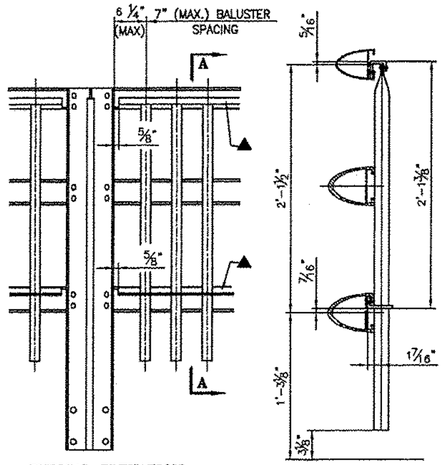

TYPICAL ELEVATION
▲ 1/4"-20UNC S.S. SOCKET SET SCREW x 1/2" - 'SS1' (#22079) EVERY OTHER SPACE BETWEEN BALUSTERS IF POSSIBLE

SECTION A-A

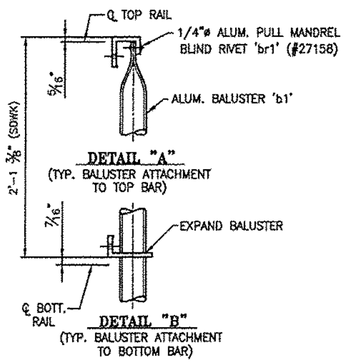

DETAIL "A"
(TYP. BALUSTER ATTACHMENT TO TOP BAR)

DETAIL "B"
(TYP. BALUSTER ATTACHMENT TO BOTTOM BAR)

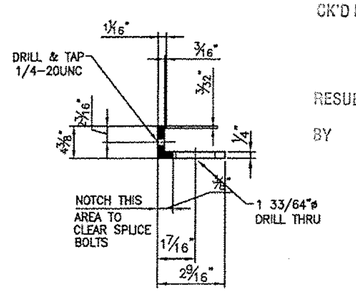

VIEW 'E'-'E'

RECEIVED
CK'D BY WSP CK'D BY SSS
OCT 24 2011
RESUBMIT ____ APPROVED ✓
BY DATE 11/1/2011

BRIDGE No. 15
PROJECT No. BRF 022-1 (14)
ITEM No: 525.23

LBFoster Fabricated Bridge Products
L.B. FOSTER COMPANY
1016 GREENTREE RD.
PITTSBURGH, PA 15220

FOR: F. R. LAFAYETTE, INC.
VERMONT AGENCY OF TRANSPORTATION
TOWN OF BETHEL, WINDSOR COUNTY, VT
3-LINE ALUMINUM BRIDGE RAIL FOR VT ROUTE 7
(MINOR ARTERIAL)(SIDEWALK) - BALUSTER PANEL DETAILS

MADE CMS DATE 09/16/11 JOB NO. AR0700
CHECK Dd DATE 10/12/11 DRAWING LB11
REV. NO. ____

REV.	DESCRIPTION	BY	DATE