REVISIONS					
ZONE	REV	DESCRIPTION	DATE	REV. BY	APPROVED
--	A	AS PER ENGINEER & CHECKER'S MARKS	9/29/11	E.J.G.	R.F.
--	B	AS PER ENGINEER'S MARKS	10/6/11	E.J.G.	R.F.
--	C	DIMENSIONAL CHANGES DUE TO STEEL AVAILABILITY	11/11/11	E.J.G.	R.F.

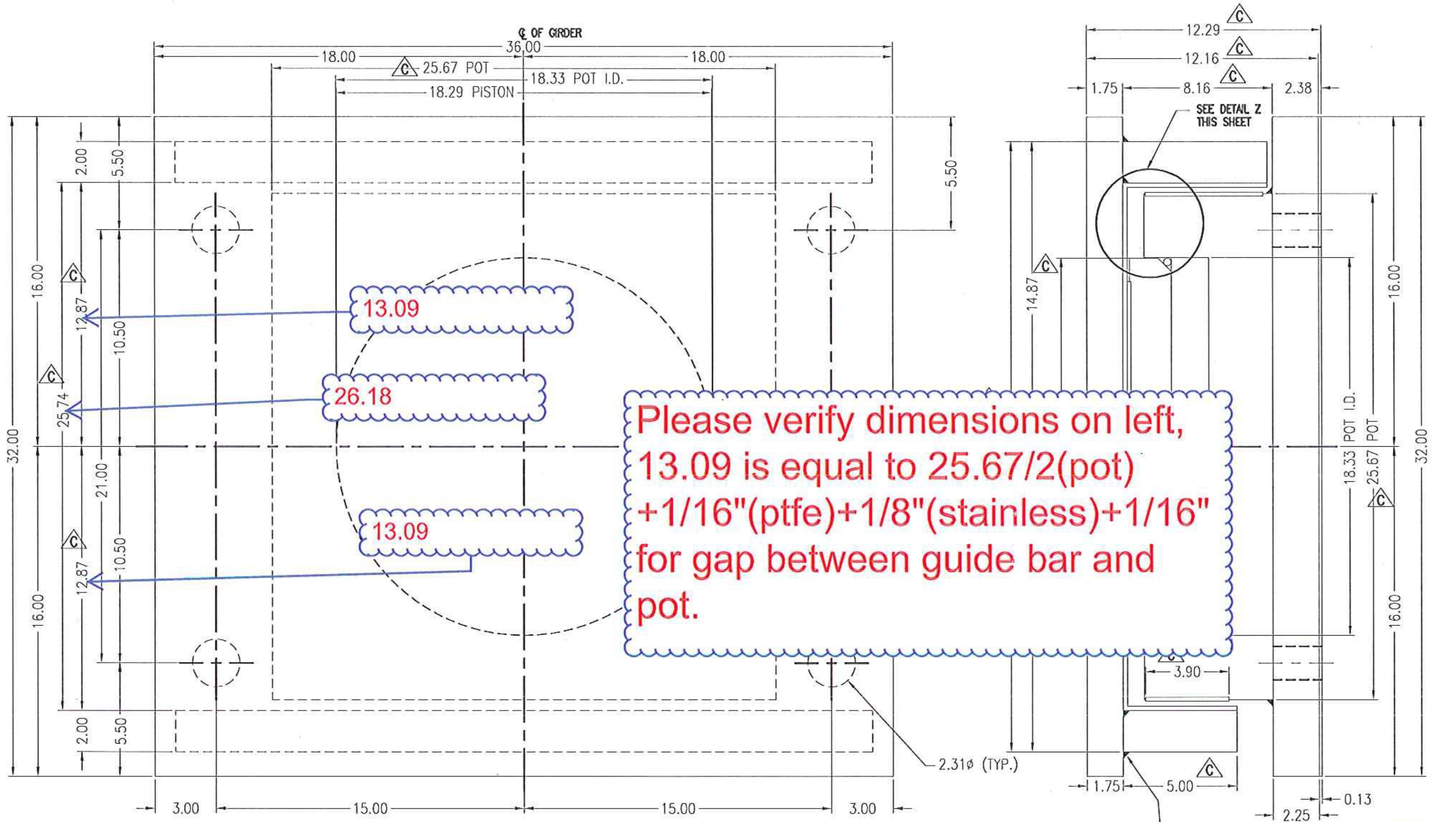

PLAN VIEW

SIDE VIEW

Please verify dimensions on left, 13.09 is equal to 25.67/2(pot) +1/16"(ptfe)+1/8"(stainless)+1/16" for gap between guide bar and pot.

1/2, ON SHEET 4 OF DESIGN CALCS IS SAYS FOR A FILLET WELD TO USE 1/2"

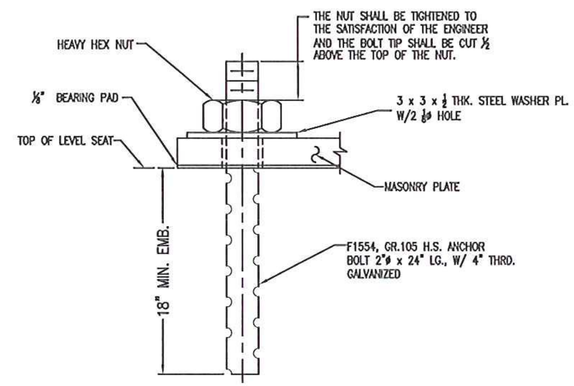

ANCHOR BOLT DETAIL
QTY. REQ'D = 4

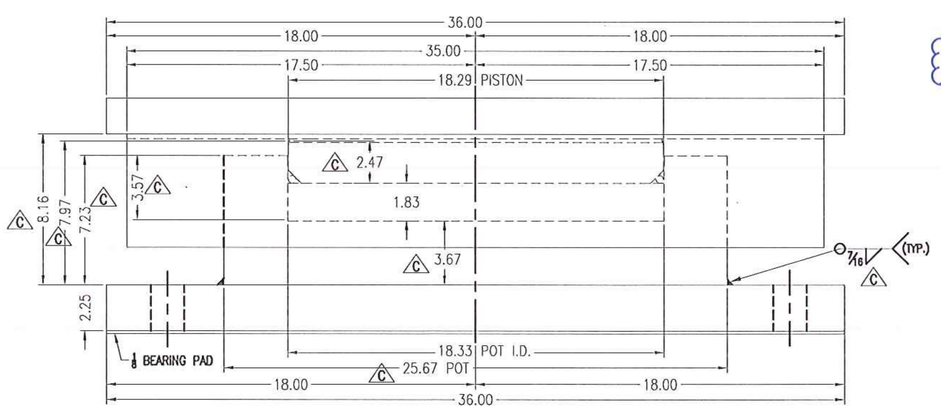

SPAN PIER TRANSVERSE GUIDED BEARING (N3)
QTY. REQ'D = 1
924 KIPS

5

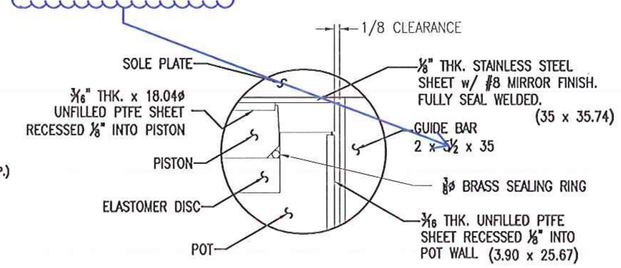

DETAIL Z

The corrected version is the sheet before this one

Vermont Agency of Transportation
RECEIVED
CK'D BY NDVB OK'D BY SSS
RESUBMIT BY
APPROVED AS NOTED
DATE 11/15/2011

VERMONT AGENCY OF TRANSPORTATION
PROJECT NAME: BETHEL
PROJECT NUMBER: BRF-022-1(14)

AMSCOT
STRUCTURAL PRODUCTS CORP.

SCALE: N.T.S.	APPRV'D: R.F.	DRAWN BY: P.S.
DATE: 8/19/11		REV.: C

TRANSVERSAL EXPANSION HLMR POT BEARING

FOR: BECK & BELLUCCI	SHEET NO 5 of 7	DWG NO: BB11A5RC