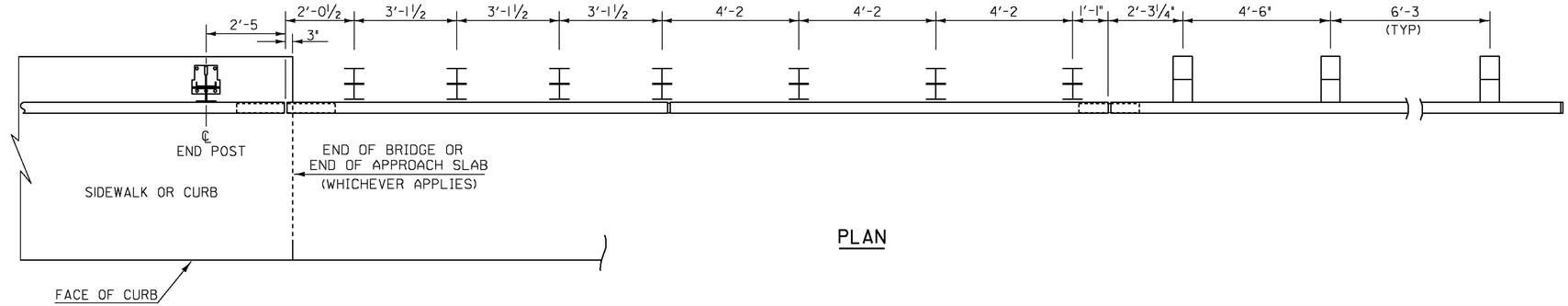

PLAN

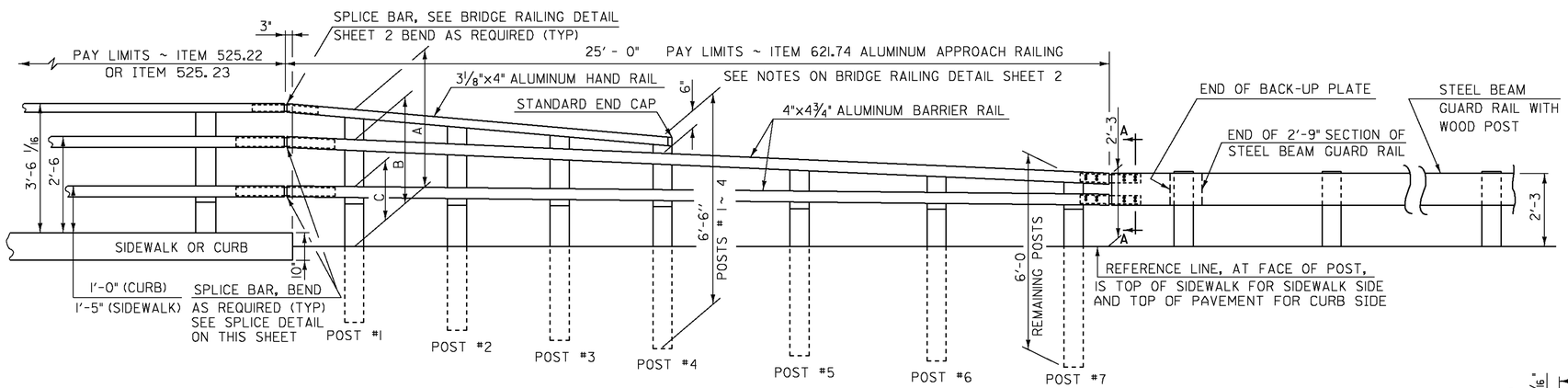

ELEVATION

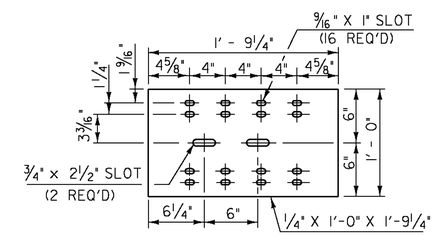

BACK-UP PLATE DETAILS

	SIDEWALK SIDE	CURB SIDE
"X"	5/8"	11/16"
"Y"	1/8"	1/2"
"Z"	1/16"	1/8"

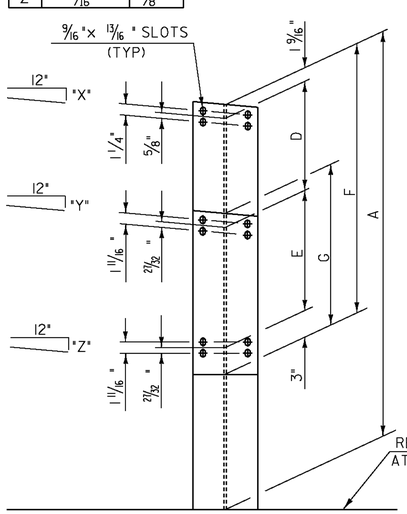

FRONT ELEVATION

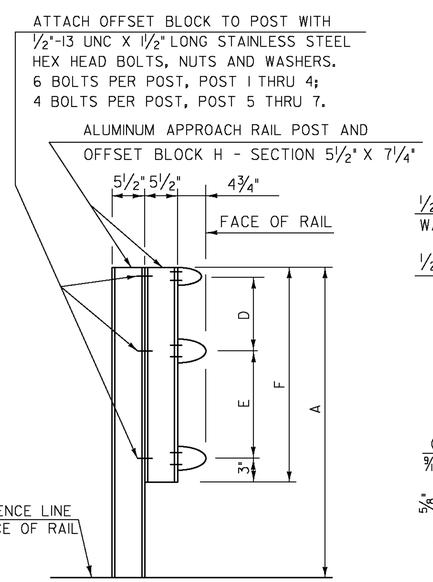

SIDE ELEVATION

APPROACH RAIL DETAILS

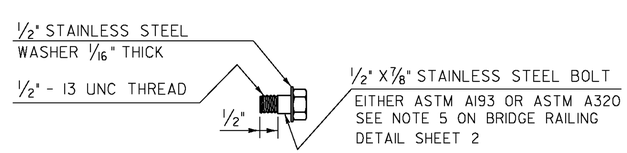

STAINLESS STEEL BOLT DETAILS

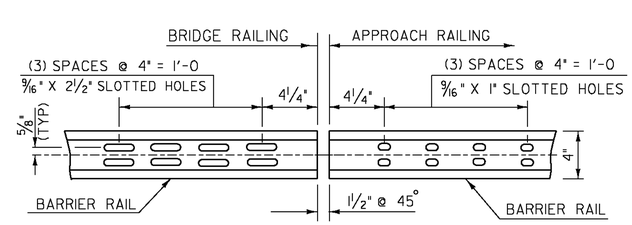

ELEVATION OF BARRIER RAIL (FROM BACK)

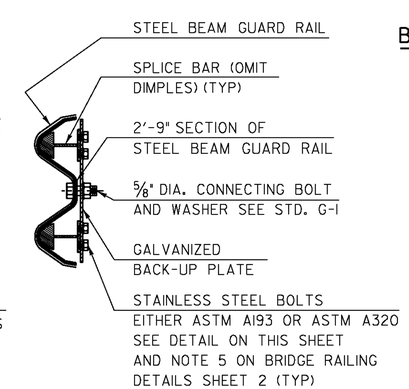

SECTION A-A

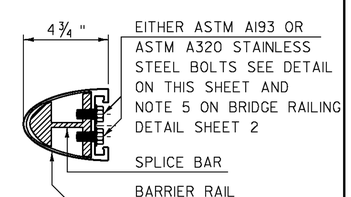

TYPICAL SECTION THROUGH
BARRIER RAIL SPLICE

PROJECT NAME: BETHEL
PROJECT NUMBER: BRF 022-1(14)

FILE NAME: s78f16lbrail.dgn
PROJECT LEADER: M. EVANS-MONGEON
DESIGNED BY: S. SCRIBNER
BRIDGE RAILING DETAIL SHEET 3

PLOT DATE: 20-MAY-2011
DRAWN BY: M. LONGSTREET
CHECKED BY: S. SCRIBNER
SHEET 103 OF 148