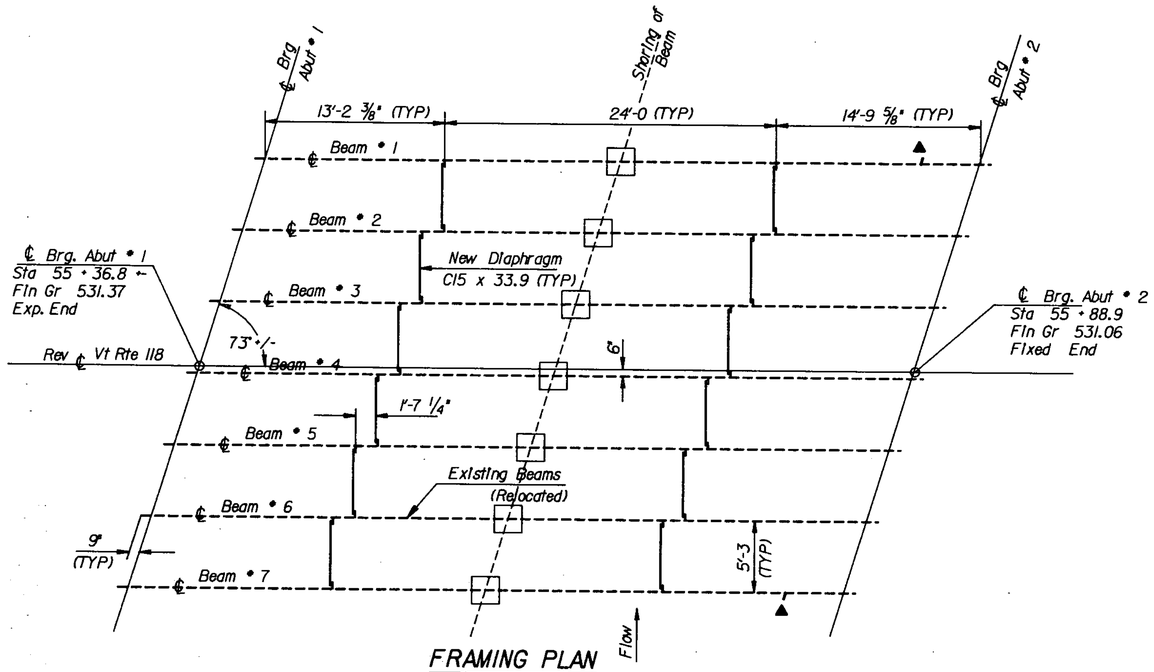

FRAMING PLAN

Scale 3/16" = 1'-0"

▲ Drip Plate on Beam's #1 & 7.
See Detail C on Std. Dwg. SCB-D7-71

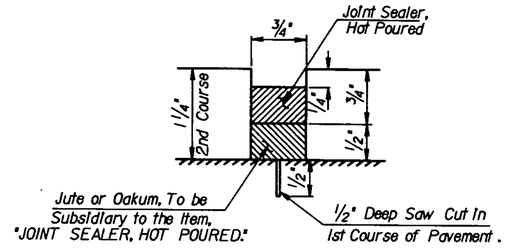

DETAIL "A"

Scale 1" = 1"

NOTE: See STD DWG SCB - D9 - 71, Detail B, for additional details, except as noted.

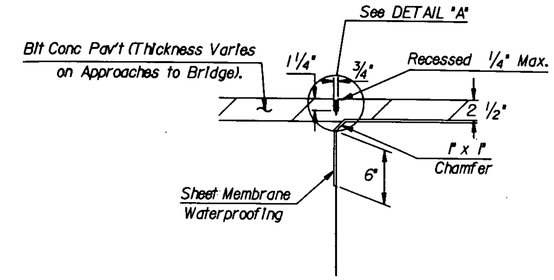

JOINT SEALER DETAIL

Scale 1 1/2" = 1'-0"

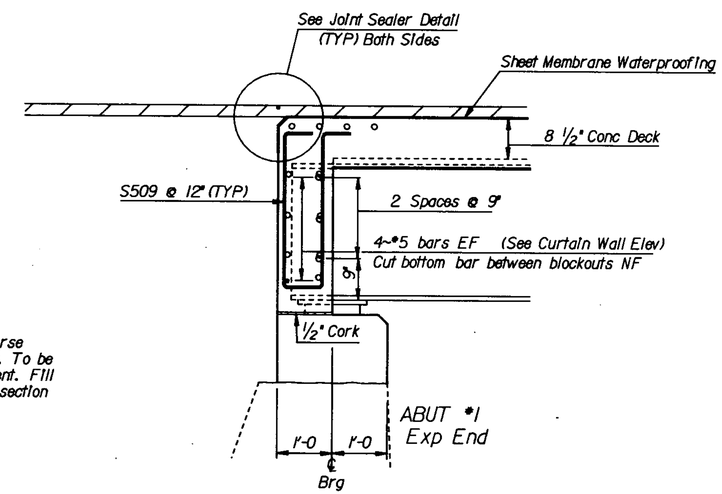

1 1/4" x 3/4" saw cut in second course of Bituminous Concrete Pavement. To be made within 24 hours of placement. Fill with Joint Sealer, Hot Poured, Subsection 614.06.

CURTAIN WALL DETAILS

(ABUTMENT No 2 SIMILAR)

Scale 3/4" = 1'-0"

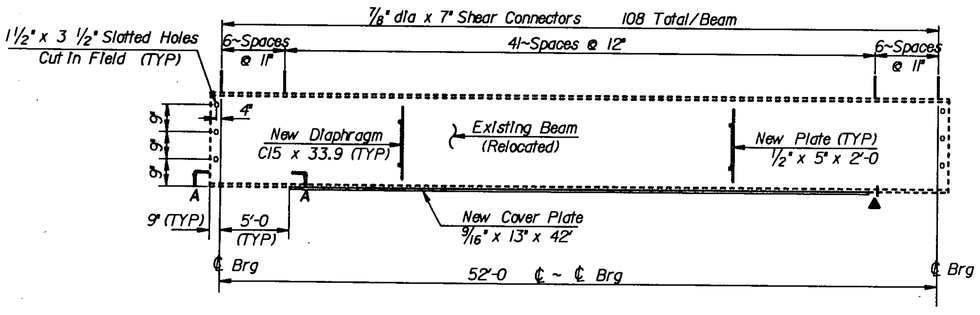

EXISTING BEAM ELEVATION

Scale Vert. 1/2" = 1'-0"

Horz. 3/16" = 1'-0"

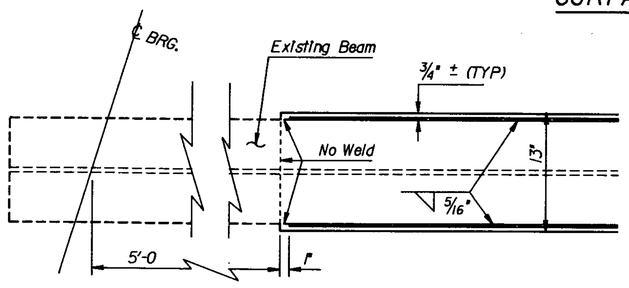

SECTION A-A

Scale 1 1/2" = 1'-0"

STATE OF VERMONT
AGENCY OF TRANSPORTATION

Town Of MONTGOMERY		Bridge No. 15	
Highway No. Vt Rte 118		Log Sta. 296 + 30	
		Surv. Sta. Rev 55 + 62.85	
Vt Rte 118 over Trout River			
Framing Plan & Joint Sealer Detail			
Designed By K. R. Sitara		Drawn By E. L. Blodgett	
Checked By K. R. Sitara	Date 8/84	Bridge Design Supervisor F. W. Bolkum Date 12/84	
PROJECT MONTGOMERY		PROJECT NO. BHS 0283(6)S	
L.G.C. Info.	OSA6 (30,23,7,8E15/SUP.DGN		
Bridge Sheet No.		Sheet 9 of 46	

BR-6