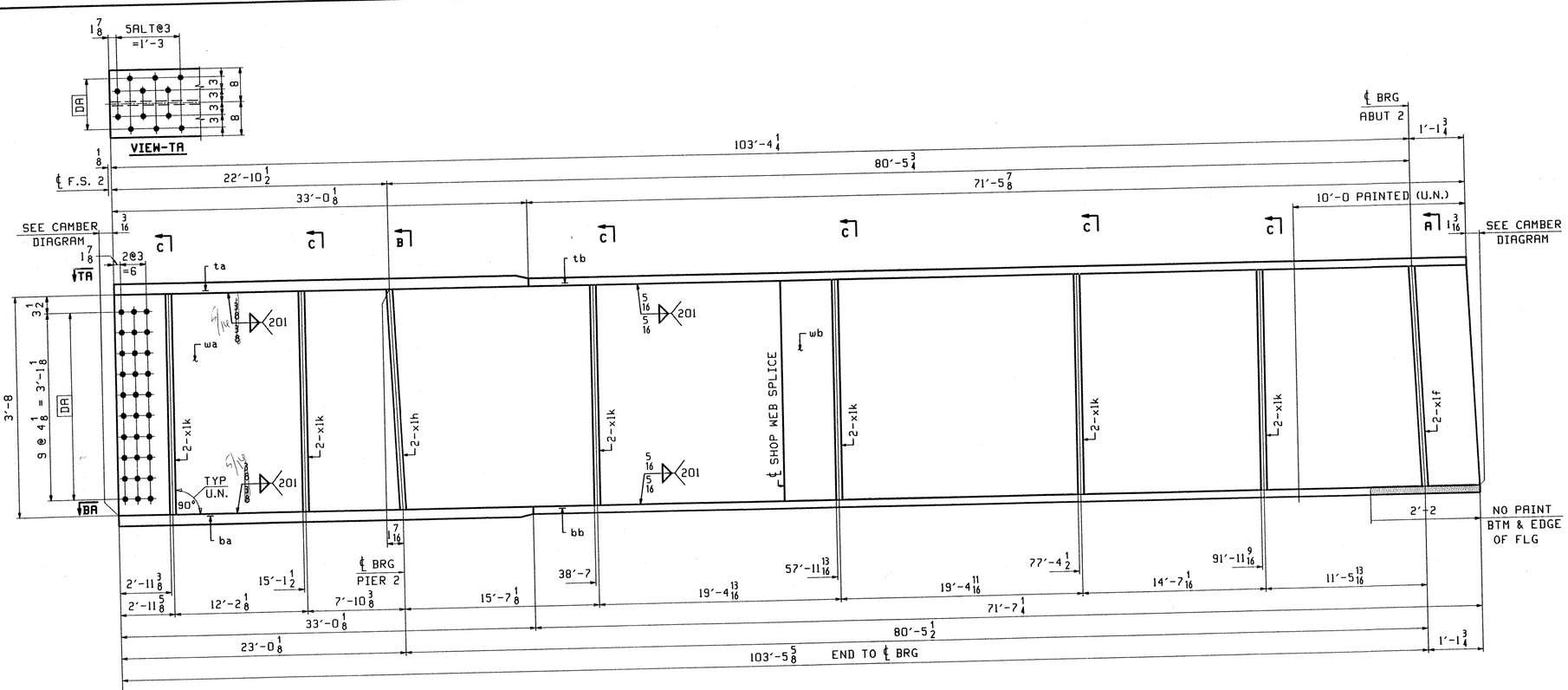

ONE - GIRDER - G5C (DEV)

1. FOR GIRDER STANDARD DETAILS SEE DWG. X1.
2. FOR CAMBER DIAGRAM SEE DWG. C3.
3. FOR FLANGE DIAGRAM SEE DWG. F3.
4. FOR GENERAL NOTES SEE SHT. GN1.

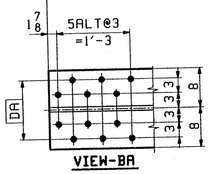

ABM INFO		SHIP	BILL OF MATERIAL						JOB NO.	DRAWING NO.	REV.
										17	
PAGE	LINE	MARK	QTY	MARK	MATERIAL	LENGTH FT	LENGTH INCHES	REMARKS	WT	PROCUREMENT NOTES	
		G5C	1		GIRDER				21024		
3	W		1	wa	PL 1/2x45	55	5 11/16	(M270-50WT2) (H2-3)			
3	Q		1	wb	PL 1/2x45	49	1 13/16	(M270-50WT2) (H2-3)			
1	C		1	ta	PL 1 1/2x16	33	0 1/8	(M270-50WT2) (H2-3)			
2	E		1	tb	PL 7/8x16	71	5 7/8	(M270-50WT2) (H2-3)			
1	C		1	ba	PL 1 1/2x16	33	0 1/8	(M270-50WT2) (H2-3)			
2	E		1	bb	PL 7/8x16	71	7 1/4	(M270-50WT2) (H2-3)			
5	C		12	x1k	PL 1/2x7	3	8	(M270-50WT2) (H2-3)			
5	B		2	x1h	PL 3/4x7 1/2	3	8	(M270-50WT2) (H2-3)			
5	B		2	x1f	PL 7/8x7 1/2	3	8	(M270-50WT2) (H2-3)			

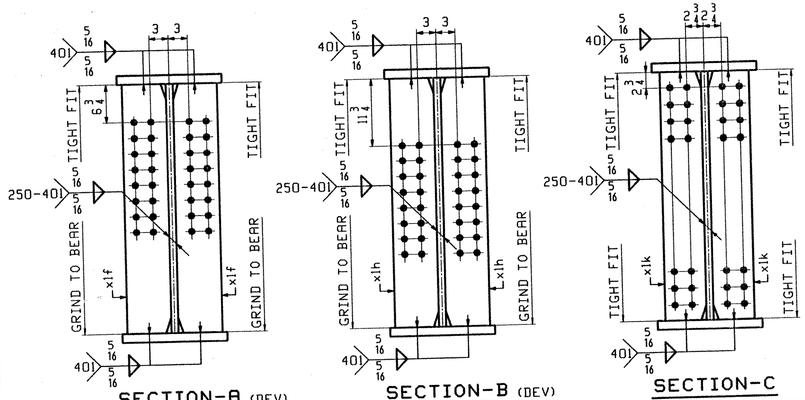

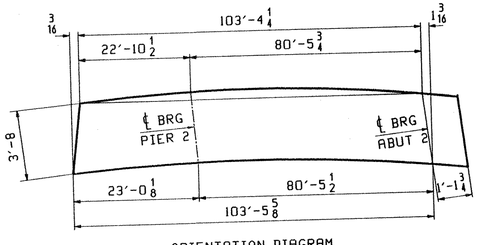

ORIENTATION DIAGRAM
FOR CAMBER SEE SHEET C3

RECEIVED
CK'D BY RJV OK'D BY
SEP 16 2002
RESUBMIT APPROVED As Noted
BY RJV DATE 10-3-02

OUT FOR APPROVAL	9-13-02										
OUT FOR APPROVAL											
ISSUED TO SHOP											
FIELD & OFFICE											
REV.	REMARKS	DATE	DWN	CHK	APP	Q.A.	NO.	DIA.	LGT	TYPE	WASHER

MATERIAL: M270-50W
ELECTRODES:
HOLES: 15/16" ø
SHOP BOLTS:

SURFACE PREP. & PAINT:
-STEEL WITHIN 10'-0 ENDS OF GIRDERS SHALL BE PAINTED (SEE GN1)
-ALL OTHER STEEL SHALL BE BLAST CLEANED AND LEFT UNPAINTED.

DESCRIPTION: GIRDER - G5C

JOB: VT. ROUTE 9 OVER DEERFIELD RIVER
BRIDGE 25B
SEARSBURG, VERMONT
CONTRACTOR: J.A. McDONALD

TENSOR 2243

PROJ NO. NHF-010-1(18)

CUSTOMER: VERMONT AGENCY OF TRANSPORTATION

DRAWN BY	ATD
DATE	09/02
CHKD BY	
DO	09/05
APPROV BY	
SUPERVISOR	W. J. GATTI
Q.A.	
JOB NO.	167
DRG. NO.	17
REV.	△

CASCO BAY STEEL STRUCTURES, INC.
75 SPRING HILL ROAD SACO, MAINE 04072
PHONE (207) 282-7360 FAX. (207) 282-1179

1702-BR25B-SS17

ATD Fri Sep 6 16:35:34 EDT 2002 /users/jobs/2242/17 - Rev0